GF Piping Systems

+GF+

Product Range International 2016

PVC-U



The best choice for you

Corrosion and chemical resistant system solutions

Georg Fischer

Georg Fischer focuses on three core businesses: GF Piping Systems, GF Automotive and GF Machining Solutions. The industrial corporation founded in 1802 headquarters in Switzerland and operates approximately 130 companies with more than 14 000 employees across 30 countries.

GF Piping Systems is a leading supplier of plastic and metal piping systems with global market presence. For the treatment and distribution of water and chemicals, as well as the safe transport of liquids and gases in industry, we have the corresponding jointing technologies, fittings, valves, automation products and pipes in our portfolio.



GF Piping Systems headquarters in Schaffhausen, Switzerland.

Our market segments

Being a strong partner, GF Piping Systems supports its customers in every phase of the project. No matter which processes and applications are planned in the following market segments:

- Building Technology
- Chemical Process Industry
- Energy
- Food & Beverage / Cooling
- Microelectronics
- Marine
- Water & Gas Utilities
- Water Treatment

Global presence

Our global presence ensures customer proximity worldwide. Sales companies in over 26 countries and representatives in another 80 countries provide customer service around the clock. With 48 production sites in Europe, Asia and the USA we are close to our customers and comply with local standards. A modern logistics concept with local distribution centers ensures highest product availability and short delivery times. GF Piping Systems specialists are always close by.

Complete solutions provider

Our extensive product range represents a unique form of product and competence bundling. With over 60 000 products, allied with a broad range of services, we offer individual and comprehensive system solutions for a variety of industrial applications. Our automation offering perfectly fits into our complete system approach and is thus an integral part of our portfolio. Having the profitability of the project in focus, we optimize processes and applications that are integrated into the whole system.

Continually setting standards in the market, we directly provide our customers with technological advantages. Due to our worldwide network customers benefit directly from over 50 years of experience in plastics.

From start to finish, we support our customers as a competent, reliable and experienced partner, actively contributing the know-how of an industrial company that has been successful in the market for over 200 years.

Value added services

From planning support to implementation – our specialists are always close by

As a leading provider of piping systems in plastic and metal, we offer our customers not only reliable products, but also a large package of services. Our support ranges from a comprehensive technical manual or the extensive CAD library to an international team of experts, who work closely together with local sales companies. And when it comes to implementing a project, our customers additionally benefit from a wide range of training courses, either on site or in our modern training centres worldwide.

Generating a genuinely individual added value for our customers is our ultimate goal when implementing our tailor-made solutions. With our application knowledge and product expertise, we support our customers during the planning process, the sustainable realization of the projects and the provision of services. Our expertise in developing and producing piping systems, combined with our profound industry and market knowledge, based on longstanding experience, makes us a qualified and professional partner for our customers.

1 Chemical resistance

Our specialist teams have decades of experience in the area of chemical resistance. They can offer individual support and advice in selecting the right material for the corresponding system solution. On request, a team will examine and select the appropriate material for special applications.

2 CAD library

The extensive CAD library is the most frequently used planning tool at GF Piping Systems. The database comprises over 30 000 drawings and technical data regarding pipes, fittings, measurement and control technology as well as manual and actuated valves. The big advantage of the CAD library is that the data can be integrated directly in CAD models.

3 Technical support

Technical support and material selection are key factors for a successful installation. A team of specialists headquartered in Switzerland is available to support the GF Piping Systems sales companies around the world. For technical advice or for general information, our customers are supported individually by the specialist team in the corresponding sales company.

4 Online and mobile calculation tools

Our numerous, multilingual online calculation tools are very useful for configuring and calculating. By means of pressure / temperature diagrams, the pressure of liquid media recommended for pipes and fittings at various temperatures can be easily defined. FlowCalc App, the mobile application of GF Piping Systems, is an on-site planning tool for pipe diameter and flow velocity calculation to select the right dimension of piping systems when no expert is near by.

5 On-site training

Our experts are available to support our customers locally and conduct training in diverse fusion and jointing techniques on location. The duration and structure of the training depends on the project and the system being installed.

6 Customizing

The customizing teams at GF Piping Systems work closely together around the globe. The focus of these teams is to manufacture custom parts for special systems. In addition, a variety of special solutions can be produced in small series. Standardized processes warrant the highest level of quality for the individual solutions of our customers.

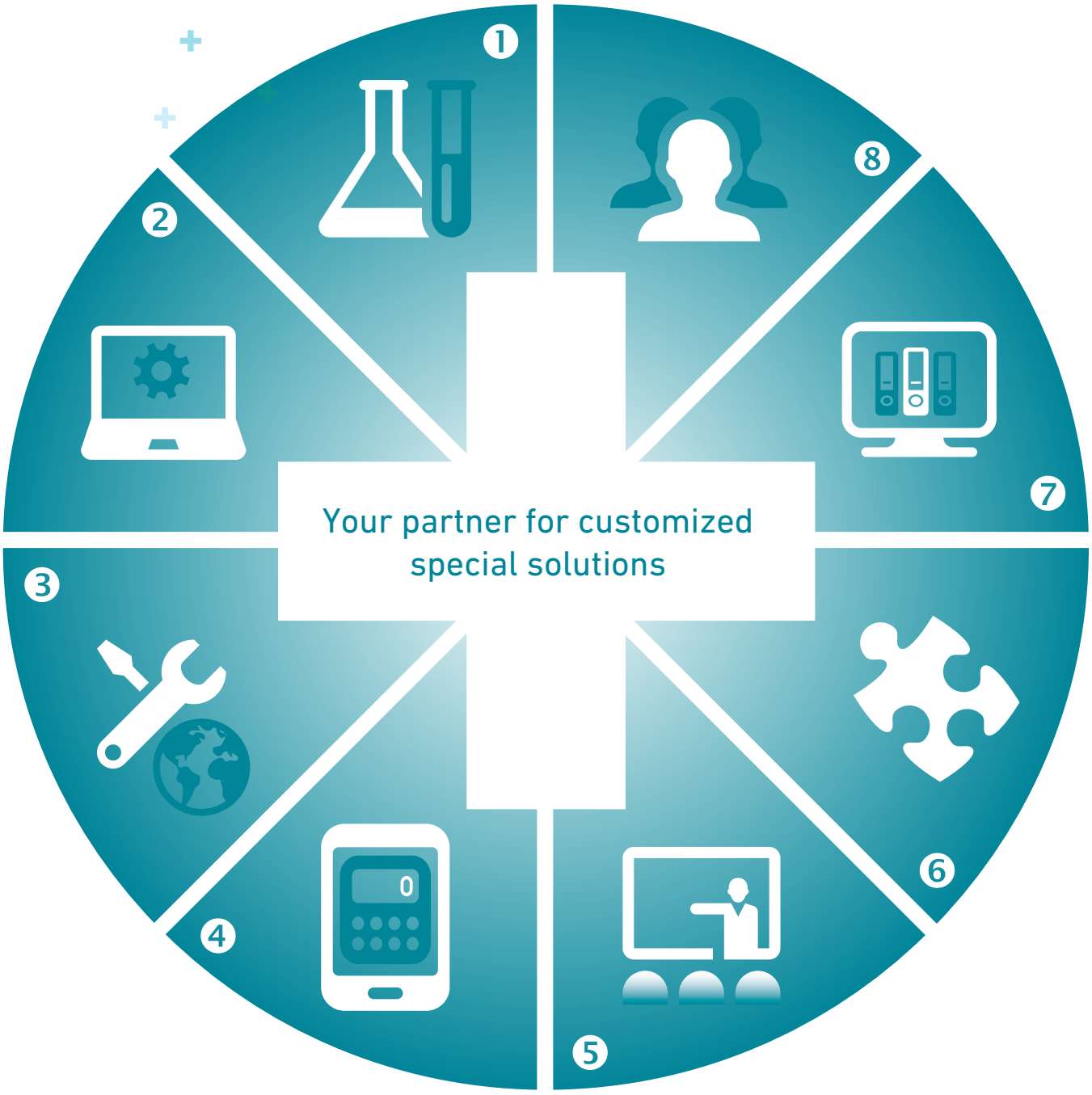

7 Technical manual

For our customers, we have documented the extensive know-how of GF Piping Systems in planning and installing plastic piping systems in our technical manual. This detailed documentation is available in both printed and digital version. The established reference book is helpful in planning large and small projects.

8 Training courses

GF Piping Systems offers a wide range of training courses that allow participants to gain confidence in working with our products and proven jointing technologies. The practical training is clearly defined, structured and adapted to the various levels of participants' experience.

PVC-U Piping System

The piping system made of PVC-U material can be used for operating temperatures in the range of 0 °C to +60 °C. Thanks to outstanding chemical resistance, PVC-U piping systems withstand demanding conditions, particularly during the transport of aggressive media, such as acids, bases and salts. The PVC-U piping system is used primarily in the chemical and textile industries, in water treatment and drinking water purification as well as in vacuum lines.

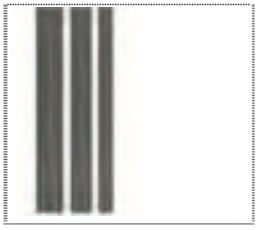

Pipes



Fittings



Joining technology



Automation



Valves

Essential system properties

- Food and drinking water approvals, proven physiological harmlessness
- First-class solution for aggressive media, such as acids, bases and salts
- Possible compact plant construction using PRO-FIT spigots, sockets, fittings
- Safe and simple joining technologies with low costs for tools and materials

Most important market segments

- Water treatment
- Chemical process industry
- Marine

Technical data

Nominal pressure	Up to 16 bar
Temperature range	0 °C to +60 °C
Joining technology	Solvent cementing
Standards and guidelines1)	ISO, EN ISO, BS, DIN, DVS, JIS
Approvals1)	DIBt, GOST-R, DGS (ACS), KIWA, CSTB, IIP, ABS, BV, CCS, DNV, GL, LR, RINA, RMROS, BSI, LR

[1)] For additional information about standards, guidelines and approvals, see www.gfps.com

PVC-U product overview

The following table uses metric units of measure.

Products	PN (bar)	d (mm)	6	8	10	12	16	20	25	32	40	50	63	75	90	110	125	140	160	180	200	225	250	280	315	355	400
		DN (mm)				8	10	15	20	25	32	40	50	65	80	100	100	125	150	150	200	200	250	250	300	355	400
	16		■	■	■	■	■	■	■	■	■	■	■	■	■	■	■	■	■								
	10								■	■	■	■	■	■	■	■	■	■	■	■	■	■	■	■			
Pipes	6											■	■	■	■	■	■	■	■	■	■	■	■	■	■	■	■
	16		■	■	■	■	■	■	■	■	■	■	■	■	■	■	■	■	■								
	10																				■	■	■	■			
Fittings	6																								■	■	■
	10					■	■	■	■	■	■	■	■	■	■	■											
Ball valves	16			■	■	■	■	■	■	■	■	■	■	■													
Butterfly valves	10											■	■	■	■	■	■	■	■	■	■	■	■	■	■	■	■
	6								■	■	■	■	■	■	■	■	■	■	■	■	■	■	■	■			
Check valves	16					■	■	■	■	■	■	■	■	■	■												
Diaphragm valves	10						■	■	■	■	■	■	■	■	■			■									
Pressure regulating valves	10					■	■	■	■	■	■	■	■	■	■												
Flanges							■	■	■	■	■	■	■	■	■	■	■	■	■	■	■	■	■	■	■	■	■
Gaskets and pipe clips			■	■	■	■	■	■	■	■	■	■	■	■	■	■	■	■	■	■	■	■	■	■	■	■	■
Automation			■	■	■	■	■	■	■	■	■	■	■	■	■	■	■	■	■	■	■	■	■	■	■	■	■

The following table uses units of measure based on the BS inch system.

Products	PN (bar)	d (mm)	⅜"	½"	¾"	1"	1 ¼"	1 ½"	2"	2 ½"	3"	4"	5"	6"	8"	10"	12"	14"	16"
	15 - class E		■	■	■	■	■	■	■		■	■	■	■					
	12 - class D						■	■	■		■	■							
	12 - class T		■	■	■	■	■	■	■										
Pipes	9 - class C								■		■	■		■	■				
	15 - class E		■	■	■	■	■	■	■	■	■	■	■	■					
Fittings	9 - class C													■	■				
Ball valves	16		■	■	■	■	■	■	■	■	■	■							
Butterfly valves	9		■	■	■	■	■	■	■	■	■	■	■	■	■	■	■	■	■
Check valves	10		■	■	■	■	■	■	■	■	■	■							
Diaphragm valves	10		■	■	■	■	■	■	■	■	■	■	■						
Pressure regulating valves	10		■	■	■	■	■	■	■	■	■	■							
Flanges				■	■	■	■	■	■	■	■	■		■	■				
Gaskets and pipe clips			■	■	■	■	■	■	■	■	■	■	■	■	■	■	■	■	■
Automation			■	■	■	■	■	■	■	■	■	■	■	■	■	■	■	■	

For more information about the system specification of PVC-U, visit www.gfps.com

Polyvinyl chloride, unplasticized (PVC-U)

PVC-U properties (reference values)

Property	Value[1]	Units	Test standard
Density	1.38	g/cm³	EN ISO 1183-1
Yield stress at 23 °C	≥ 54	N/mm²	EN ISO 527-1
Tensile e-modulus at 23 °C	≥ 2,700	N/mm²	EN ISO 527-1
Charpy notched impact strength at 23 °C	≥ 3	kJ/m²	EN ISO 179-1/1eA
Charpy notched impact strength at 0 °C	≥ 2	kJ/m²	EN ISO 179-1/1eA
Vicat-heat distortion temperature B/50N	≥ 76	°C	ISO 306
Thermal conductivity at 23 °C	0.15	W/m K	EN 12664
Water absorption at 23 °C	≤ 0.1	%	EN ISO 62
Color	7,011	-	RAL
Limiting oxygen index (LOI)	42	%	ISO 4589-1

[1] Typical characteristics measured at the material should not be used for calculations.

General

Polyvinylchloride (PVC) is one of the most important and oldest plastics. Worldwide consumption of PVC is exceeded only by PE and PP. PVC was produced for the first time as early as the middle of the 19th century. But an industrial manufacturing process was not patented until the year 1913. Nowadays, many industrial applications could not be implemented without PVC, but PVC has also become irreplaceable in the use of daily products.

PVC is a polymer having approximately 56 % by weight of chlorine. The PVC resin becomes a processable and usable material only by using additives. The choice of the additives allows a wide variation of its characteristics and an adjustment to the planned application. There are two classes of PVC materials. Soft PVC (PVC-P) which is created by adding plasticizers (e.g. phthalates). This type is not used at GF Piping Systems. Hard PVC, also called unplasticized PVC (PVC-U), is used for piping system construction.

PVC-U is an amorphous thermoplastic. The properties of PVC-U molded parts are strongly dependent on the composition of the individual components, but also on the processing. Because of our 50 years of experience in PVC processing and the continuous advancement of our own formulation of materials, GF Piping Systems has become a benchmark in the field of PVC-U piping. Long-term creep strength was tested in long-term tests according to ISO 1167 and calculated according to ISO 9080. According to ISO 12162, our PVC-U types are classified as MRS 25.

Advantages of PVC-U

- Versatility of use
- Very good chemical and corrosion resistance
- Proven physiological harmlessness and therefore suitable for contact with food
- No influence on drinking water quality
- Biologically inert; no support of microbial growth
- High mechanical tensile strength
- Secure solvent cementing using Tangit
- Use of tin stabilizers for fittings and valves



UV and weather resistance

PVC-U is very weather-resistant. Even longer exposure to direct sunlight, wind and rain does hardly any damage to the material. Despite its very good weather resistance to ultraviolet radiation, PVC-U loses some of its impact strength. In extreme applications, it can be advantageous to protect the material from direct sunlight exposure. Contact your GF Piping Systems representative for suitable protective measures.



Chemical resistance

PVC-U shows a good resistance against a broad range of media. For detailed information, observe the comprehensive list of chemical resistance from GF Piping Systems or contact an authorized GF Piping Systems representative.



Abrasion resistance

As a relatively hard thermoplastic, the resistance of PVC-U against abrasive stress is lower than those of other pipe materials. For this reason, it is seldom used for applications in the area of solid transport.



Application limits

The application limits of the material on the one hand depend on embrittlement and softening temperatures and on the other hand on the nature and the expected service life of the application. The pressure-temperature diagrams give details on application temperatures and pressures.



Combustion behavior

The high chlorine content of PVC-U causes an advantageous combustion behavior. Self-ignition resulting from temperature influences occurs only at 450 °C. PVC-U burns when exposed to an open flame, but extinguishes immediately after removing the flame. The oxygen index (LOI) amounts to 42 % (materials that burn with less than 21 % of oxygen in the air are considered to be flammable).

PVC-U thus also falls in the best flammability class V0 according to UL94, and in the building materials classes:

- B1 (flame retardant) for pipe wall thicknesses less than 3.2 mm
- B2 (normal flammable) for pipe wall thicknesses greater than 3.2 mm according to DIN 4102-1. According to the French test method NF P 92-501, PVC-U from GF Piping Systems is tested as M2.

Because the combustion of PVC-U produces hydrogen chloride, which forms a corrosive acid in connection with water, immediate cleaning of areas susceptible to corrosion is necessary after a fire. Danger to personnel from hydrochloric acid (HCl) is minimal because its pungent odor allows early escape from toxic combustion gases, mainly from the odorless carbon monoxide. There are no restrictions for the choice of firefighting agents.



Electrical properties

PVC-U, like all unmodified thermoplastics, is non-conductive. This means that no electrochemical corrosion takes place in PVC-U systems. On the other hand, these non-conductive properties have to be taken into account because an electrostatic charge can develop in the piping. Special attention must be paid to this fact in environments in which explosive gases may occur. Various methods are available to prevent the occurrence of electrostatic charges. GF Piping Systems representatives can provide support in selecting the right one. The specific volume resistance is at least 1,015 Ωcm.



Physiological properties

The PVC-U formulas were developed by GF Piping systems for use with drinking water and food. PVC-U's physiological harmlessness regarding neutral, acidic and alcoholic foodstuffs, and the non-influence on drinking water with respect to odor, taste or microbiological effects are not affected and regularly checked and monitored by neutral institutions in various countries. GF Piping Systems offers PVC-U systems free from lead and cadmium for your applications in the fields of drinking water or food. The residual monomer content of vinyl chloride lies below the detection limit of modern analytical methods. For details regarding existing approvals for applications with drinking water or foodstuffs, please contact your authorized GF Piping Systems representative.

Table of contents

PVC-U metric	12
PVC-U BS / JIS	284
PVC-U silicon free	419
Electric and pneumatic actuators	473
Solvent cements and tools	481
Spare parts	484
Index	532

PVC-U metric		Page
	Pipes	16
	Fittings	21
	Adaptor fittings	32
	Threaded fittings	41
	Unions	44
	Seals	63
	Flange adaptors and flanges	66
	Branch and tapping saddles	72
	Saddles	74
	Installation fittings	75
	Ball valve type 546	98
	Ball valves electric type 107	109
	Ball valves electric type 179	117
	Ball valves electric type 104	120
	Ball valves pneumatic type 230	122
	3-Way ball valves type 543	150
	3-Way ball valves electric type 167	162

PVC-U metric		Page
	3-Way ball valves electric type 170	167
	3-Way ball valves electric type 189	169
	3-Way ball valves pneumatic type 285	171
	Metering ball valves type 523	179
	Laboratory ball valves type 322	181
	Diaphragm valves	182
	Diaphragm valves pneumatic	190
	Butterfly valves type 567	210
	Butterfly valves electric type 145	213
	Butterfly valves type 240	217
	Lugstyle butterfly valve type 578	220
	Lugstyle butterfly valves electric type 146	223
	Lugstyle butterfly valves type 243	227
	Pressure regulating valves	230
	Process control valves	237
	Cone check valves	242
	Wafer check valves	253

PVC-U metric		Page
	Angle seat valves	256
	Solenoid valves	258
	Variable area flow meters	263
	Strainers	275
	Screen assemblies and Inspection glass	278
	Pipe clips	280

Pipes



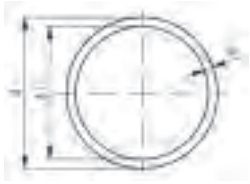

Pipe PVC-U grey
Series S6,3 SDR13,6 nominal pressure PN16

Model:

- Material: PVC-U, Polyvinylchloride unplasticised DIN 8061
- Colour: RAL 7011 - dark-grey
- Dimension: DIN EN ISO 15493, DIN 8062
- Pipe length: 5m, with plain ends
- Minimum order quantity: 1 length
- DIBT Z-40.23-1 from d20

d (mm)	Size (NB) (inch)	PN (bar)	Code	Weight (kg/m)	e (mm)	di (mm)
12		16	**161 017 104**	0.055	1.0	10.0
16		16	**161 017 105**	0.090	1.2	13.6
20		16	**161 017 106**	0.137	1.5	17.0
25		16	**161 017 107**	0.212	1.9	21.2
32		16	**161 017 108**	0.342	2.4	27.2
40		16	**161 017 109**	0.525	3.0	34.0
50		16	**161 017 110**	0.809	3.7	42.6
63		16	**161 017 111**	1.290	4.7	53.6
75	2 ½	16	**161 017 112**	1.820	5.6	58.2
90		16	**161 017 113**	2.610	6.7	76.6
110		16	**161 017 114**	3.856	8.1	93.8
125		16	**161 017 115**	4.956	9.2	106.6
140	5	16	**161 017 116**	6.215	10.3	119.4
160		16	**161 017 117**	8.109	11.8	136.4



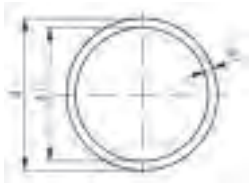

Pipe PVC-U grey
Series S4 SDR9 nominal pressure PN16

Model:

- Material: PVC-U, Polyvinylchloride unplasticised DIN 8061
- Colour: RAL 7011 - dark-grey
- Dimension: DIN EN ISO 15493, DIN 8062
- Pipe length: 5m, with plain ends
- **Increased wall thickness for industrial use**
- Minimum order quantity: 1 length
- DIBT Z-40.23-1 from d16

d (mm)	PN (bar)	Code	Weight (kg/m)	e (mm)	di (mm)
6	16	**161 017 126**	0.025	1.0	4.0
8	16	**161 017 127**	0.035	1.0	6.0
10	16	**161 017 128**	0.053	1.2	7.6
12	16	**161 017 129**	0.073	1.4	9.2
16	16	**161 017 130**	0.123	1.8	12.4
20	16	**161 017 131**	0.196	2.3	15.4
25	16	**161 017 132**	0.294	2.8	19.4
32	16	**161 017 133**	0.482	3.6	24.8
40	16	**161 017 134**	0.750	4.5	31.0
50	16	**161 017 135**	1.160	5.6	38.8
63	16	**161 017 136**	1.820	7.0	49.0
75	16	**161 017 137**	2.600	8.4	58.2
90	16	**161 017 138**	3.700	10.0	70.0
110	16	**161 017 139**	5.560	12.3	85.4



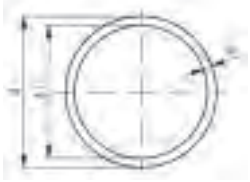

Pipe PVC-U grey
Series S10 SDR21 nominal pressure PN10

Model:

- Material: PVC-U, Polyvinylchloride unplasticised DIN 8061
- Colour: RAL 7011 - dark-grey
- Dimension: DIN EN ISO 15493, DIN 8062
- Pipe length: 5m, with plain ends
- Minimum order quantity: 1 length
- DIBT Z-40.23-1 until d225

d (mm)	PN (bar)	Code	Weight (kg/m)	e (mm)	di (mm)
25	10	**161 017 082**	0.174	1.5	22.0
32	10	**161 017 083**	0.276	1.8	28.4
40	10	**161 017 084**	0.350	1.9	36.2
50	10	**161 017 085**	0.552	2.4	45.2
63	10	**161 017 086**	0.854	3.0	57.0
75	10	**161 017 087**	1.220	3.6	67.8
90	10	**161 017 088**	1.750	4.3	81.4
110	10	**161 017 089**	2.610	5.3	99.4
125	10	**161 017 090**	3.340	6.0	113.0
140	10	**161 017 091**	4.180	6.7	126.6
160	10	**161 017 092**	5.470	7.6	144.7
180	10	**161 017 093**	6.880	8.6	162.8
200	10	**161 017 094**	8.510	9.6	180.8
225	10	**161 017 095**	10.800	10.8	203.4
250	10	**161 017 096**	13.200	11.9	226.2
280	10	**161 017 097**	16.600	13.4	253.2
315	6	**161 017 098**	20.900	15.0	285.0



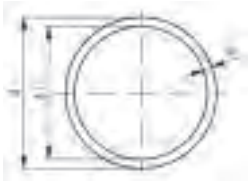

Pipe PVC-U transparent
Series S16.7 SDR34.3

Model:

- Material: PVC-U, Polyvinylchloride unplasticised DIN 8061
- Colour: transparent
- Dimension: DIN EN ISO 15493, DIN 8062
- Pipe length: 5m, with plain ends
- The material used fullfills the requirements of DIN 8061 in all aspects except longterm pressure test
- Minimum order quantity: 1 length

d (mm)	PN (bar)	Code	Weight (kg/m)	e (mm)	di (mm)
50	6	**192 017 060**	0.422	1.8	46.4
160	6	**192 017 080**	3.440	4.7	150.6



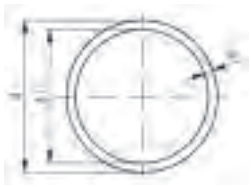

Pipe PVC-U transparent
Series S25 SDR51

Model:

- Material: PVC-U, Polyvinylchloride unplasticised DIN 8061
- Colour: transparent
- Dimension: DIN EN ISO 15493, DIN 8062
- Pipe length: 5m, with plain ends
- The material used fullfills the requirements of DIN 8061 in all aspects except longterm pressure test
- Minimum order quantity: 1 length

d (mm)	PN (bar)	Code	Weight (kg/m)	e (mm)	di (mm)
63	4	**192 017 036**	0.532	1.8	59.4
75	4	**192 017 037**	0.642	1.8	71.4
90	4	**192 017 038**	0.774	1.8	86.4
110	4	**192 017 039**	1.160	2.2	105.6
125	4	**192 017 040**	1.480	2.5	120.0
140	4	**192 017 041**	1.840	2.8	134.4
160	4	**192 017 042**	2.410	3.2	153.6
200	4	**192 017 044**	3.700	4.0	192.0
225	4	**192 017 045**	4.700	4.5	216.0
250	4	**192 017 046**	5.650	4.9	240.2
280	4	**192 017 047**	7.600	5.5	269.0



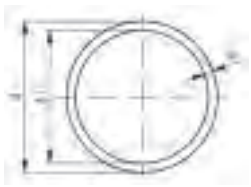

Pipe PVC-U transparent
Series S6.25 SDR13.5

Model:

- Material: PVC-U, Polyvinylchloride unplasticised DIN 8061
- Colour: transparent
- Dimension: DIN EN ISO 15493, DIN 8062
- Pipe length: 5m, with plain ends
- The material used fullfills the requirements of DIN 8061 in all aspects except longterm pressure test
- Minimum order quantity: 1 length

d (mm)	PN (bar)	Code	Weight (kg/m)	e (mm)	di (mm)
12	16	**192 017 104**	0.055	1.0	10.0
16	16	**192 017 105**	0.090	1.2	13.6
20	16	**192 017 106**	0.137	1.5	17.0
25	16	**192 017 107**	0.212	1.9	21.2
32	16	**192 017 108**	0.342	2.4	27.2
40	16	**192 017 109**	0.525	3.0	34.0
50	16	**192 017 110**	0.809	3.7	42.6
63	16	**192 017 111**	1.290	4.7	53.6



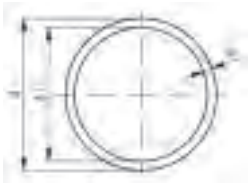

Pipe PVC-U transparent
Series S10 SDR21

Model:

- Material: PVC-U, Polyvinylchloride unplasticised DIN 8061
- Colour: transparent
- Dimension: DIN EN ISO 15493, DIN 8062
- Pipe length: 5m, with plain ends
- Minimum order quantity: 1 length

d (mm)	PN (bar)	Code	Weight (kg/m)	e (mm)	di (mm)
25	10	**192 017 082**	0.174	1.5	22.0
32	10	**192 017 083**	0.264	1.8	28.4
40	10	**192 017 084**	0.366	1.9	36.2
50	10	**192 017 085**	0.552	2.4	45.2
63	10	**192 017 086**	0.854	3.0	57.0
75	10	**192 017 087**	1.220	3.6	67.8
90	10	**192 017 088**	1.750	4.3	81.4
110	10	**192 017 089**	2.610	5.3	99.4



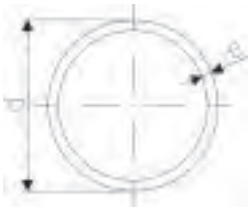

Pipe PVC-U grey
SDR34.3 nominal pressure PN6

Model:

- Material: PVC-U, Polyvinylchloride unplasticised
- Colour: RAL 7011 - dark-grey
- Dimension: DIN EN ISO 15493, DIN 8062
- Pipe length: 5m, with plain ends
- Minimum order quantity: 1 length
- DIBT Z-40.23-1 until d225

d (mm)	PN (bar)	Code	Weight (kg)	e (mm)	di (mm)
50	6	**161 017 060**	0.422	1.8	46.4
63	6	**161 017 061**	0.562	1.9	59.2
75	6	**161 017 062**	0.782	2.2	70.6
90	6	**161 017 063**	1.130	2.7	84.6
110	6	**161 017 064**	1.640	3.2	103.6
125	6	**161 017 065**	2.130	3.7	117.6
140	6	**161 017 066**	2.650	4.1	131.8
160	6	**161 017 067**	3.440	4.7	150.6
180	6	**161 017 068**	4.370	5.3	169.4
200	6	**161 017 069**	5.370	5.9	188.2
225	6	**161 017 070**	6.760	6.6	211.6
250	6	**161 017 071**	8.310	7.3	235.4
315	6	**161 017 072**	13.200	9.2	296.6
355	6	**161 017 073**	16.700	10.4	334.2
400	6	**161 017 074**	21.100	11.7	376.6



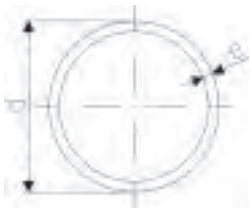

Pipe PVC-U grey
SDR51 nominal pressure PN4

Model:

- Material: PVC-U, Polyvinylchloride unplasticised
- Colour: RAL 7011 - dark-grey
- Dimension: DIN EN ISO 15493, DIN 8062
- Pipe length: 5m, with plain ends
- Minimum order quantity: 1 length

d (mm)	PN (bar)	Code	Weight (kg/m)	e (mm)	di (mm)
75	4	**161 017 037**	0.642	1.8	71.4
90	4	**161 017 038**	0.774	1.8	86.4
110	4	**161 017 039**	1.160	2.2	105.6
125	4	**161 017 040**	1.480	2.5	120.0
140	4	**161 017 041**	1.840	2.8	134.4
160	4	**161 017 042**	2.410	3.2	153.6
180	4	**161 017 043**	3.020	3.6	172.8
200	4	**161 017 044**	3.700	4.0	192.0
225	4	**161 017 045**	4.700	4.5	216.0
250	4	**161 017 046**	5.650	4.9	240.2
280	4	**161 017 047**	7.110	5.5	269.0
315	4	**161 017 048**	9.020	6.2	302.6

Fittings



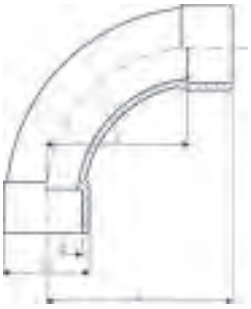

Bend 90° PVC-U metric

d (mm)	PN (bar)	Code	Weight (kg)	z (mm)	D (mm)	L (mm)
20	16	**721 000 106**	0.029	40	27	56
25	16	**721 000 107**	0.049	50	33	69
32	16	**721 000 108**	0.074	64	38	86
40	16	**721 000 109**	0.121	80	47	106
50	16	**721 000 110**	0.298	100	61	131
63	16	**721 000 111**	0.516	126	76	164
75	16	**721 000 112**	0.798	150	90	194
90	16	**721 000 113**	1.373	180	108	231
110	16	**721 000 114**	2.699	220	137	281
140	16	**721 000 116**	5.204	280	168	356
160	16	**721 000 117**	8.298	320	192	406



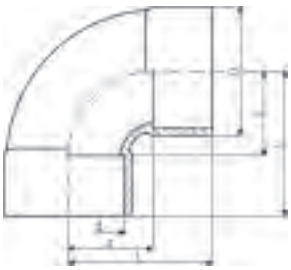

Bend 90° short pattern PVC-U metric

d (mm)	PN (bar)	Code	Weight (kg)	z (mm)	D (mm)	L (mm)
225	10	**721 010 120**	7.554	168	256	287
280	10	**721 010 122**	16.987	210	318	357
315	6	**721 010 123**	21.567	237	356	402
400	6	**721 010 125**	30.000	300	442	521



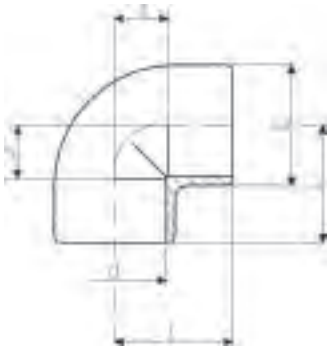

Elbow 90° PVC-U metric

d (mm)	d (inch)	PN (bar)	Code	Weight (kg)	z (mm)	D (mm)	L (mm)
6		16	**721 100 101**	0.004	4	11	16
8		16	**721 100 102**	0.004	5	13	17
10		16	**721 100 103**	0.004	6	14	18
12		16	**721 100 104**	0.006	7	17	19
16		16	**721 100 105**	0.007	9	21	23
20		16	**721 100 106**	0.012	11	25	27
25		16	**721 100 107**	0.024	14	32	33
32		16	**721 100 108**	0.043	17	40	39
40		16	**721 100 109**	0.062	23	47	49
50		16	**721 100 110**	0.106	26	59	57
63		16	**721 100 111**	0.205	33	73	71
75	2 ½	16	**721 100 112**	0.336	40	87	83
90		16	**721 100 113**	0.576	46	105	97
110		16	**721 100 114**	1.009	55	128	116
125		16	**721 100 115**	1.522	63	146	131
140	5	16	**721 100 116**	1.945	70	162	146
160		16	**721 100 117**	2.873	80	185	166
200		10	**721 100 119**	4.446	101	225	207
225		10	**721 100 120**	5.989	114	252	233
250		10	**721 100 121**	10.014	131	282	263





PRO-FIT elbow 90° PVC-U metric

Model:

- Outlet: A = solvent cemented socket metric
- Outlet: B = solvent cemented spigot in combination with reducing socket metric
- Direct connection from fitting to fitting allowing shortest possible overall length

d (mm)	d1 (mm)	PN (bar)	Code	Weight (kg)	z (mm)	z1 (mm)	z2 (mm)	D (mm)	L (mm)	L1 (mm)
20	16	16	**721 100 306**	0.011	11	16	18	25	27	32
25	20	16	**721 100 307**	0.020	14	18	21	31	33	37
32	25	16	**721 100 308**	0.038	17	22	25	38	39	44
40	32	16	**721 100 309**	0.069	23	30	34	47	49	56
50	40	16	**721 100 310**	0.122	26	36	41	58	57	67
63	50	16	**721 100 311**	0.237	33	45	52	73	71	83





PRO-FIT elbow 45° PVC-U metric

Model:

- Outlet: A = solvent cemented socket metric
- Outlet: B = solvent cemented spigot in combination with reducing socket metric
- Direct connection from fitting to fitting allowing shortest possible overall length

d (mm)	d1 (mm)	PN (bar)	Code	Weight (kg)	z (mm)	z1 (mm)	z2 (mm)	D (mm)	L (mm)	L1 (mm)
20	16	16	**721 150 306**	0.010	5	9	11	25	21	25
25	20	16	**721 150 307**	0.015	6	11	14	31	25	30
32	25	16	**721 150 308**	0.027	8	13	16	38	30	35
40	32	16	**721 150 309**	0.053	10	17	21	47	36	43
50	40	16	**721 150 310**	0.090	12	18	23	58	43	49
63	50	16	**721 150 311**	0.175	14	23	30	73	52	61





Elbow 45° PVC-U metric

d (mm)	d (inch)	PN (bar)	Code	Weight (kg)	z (mm)	D (mm)	L (mm)
16		16	**721 150 105**	0.008	5	21	19
20		16	**721 150 106**	0.011	5	25	21
25		16	**721 150 107**	0.017	6	31	25
32		16	**721 150 108**	0.021	8	38	30
40		16	**721 150 109**	0.048	10	47	36
50		16	**721 150 110**	0.086	12	59	43
63		16	**721 150 111**	0.160	14	73	52
75	2 ½	16	**721 150 112**	0.253	17	87	61
90		16	**721 150 113**	0.430	20	105	71
110		16	**721 150 114**	0.750	25	127	86
125		16	**721 150 115**	1.193	28	146	97
140	5	16	**721 150 116**	1.570	32	162	108
160		16	**721 150 117**	2.280	36	185	122
200		10	**721 150 119**	3.288	43	225	149
225		10	**721 150 120**	4.191	49	250	168
250		10	**721 150 121**	7.115	60	282	192
280		10	**721 150 122**	10.340	66	318	213
315		6	**721 150 123**	14.292	74	356	239
400		6	**721 150 125**	25.268	94	442	302





Tee 90° equal PVC-U metric

d (mm)	d (inch)	PN (bar)	Code	Weight (kg)	D (mm)	L (mm)	z (mm)
6		16	**721 200 101**	0.004	11	16	4
8		16	**721 200 102**	0.008	13	17	5
10		16	**721 200 103**	0.008	16	18	6
12		16	**721 200 104**	0.011	19	19	7
16		16	**721 200 105**	0.011	21	23	9
20		16	**721 200 106**	0.019	25	27	11
25		16	**721 200 107**	0.029	31	33	14
32		16	**721 200 108**	0.055	38	39	17
40		16	**721 200 109**	0.100	48	49	23
50		16	**721 200 110**	0.156	58	57	26
63		16	**721 200 111**	0.291	73	71	33
75	2 ½	16	**721 200 112**	0.476	87	83	39
90		16	**721 200 113**	0.824	105	97	46
110		16	**721 200 114**	1.411	127	116	55
125		16	**721 200 115**	2.521	151	135	66
140	5	16	**721 200 116**	3.410	169	147	71
160		16	**721 200 117**	4.982	193	167	81
200		10	**721 200 119**	5.868	225	207	101
225		10	**721 200 120**	9.268	256	233	114
250		10	**721 200 121**	14.350	282	263	132
280		10	**721 200 122**	19.541	318	298	152
315		6	**721 200 123**	27.254	356	332	168
400		6	**721 200 125**	35.000	442	420	214





PRO-FIT tee 90° equal PVC-U metric

Model:

- Outlet: A = solvent cemented socket metric
- Outlet: B = solvent cemented spigot in combination with reducing socket metric
- Direct connection from fitting to fitting allowing shortest possible overall length

d (mm)	d1 (mm)	PN (bar)	Code	Weight (kg)	z (mm)	z1 (mm)	z2 (mm)	D (mm)	L (mm)	L1 (mm)	L2 (mm)
20	16	16	**721 200 306**	0.017	11	17	19	25	27	33	27
25	20	16	**721 200 307**	0.022	14	19	22	31	33	38	33
32	25	16	**721 200 308**	0.051	17	24	27	38	39	46	39
40	32	16	**721 200 309**	0.098	23	30	34	47	47	56	49
50	40	16	**721 200 310**	0.164	26	36	41	58	57	67	57
63	50	16	**721 200 311**	0.329	33	45	52	73	71	83	71



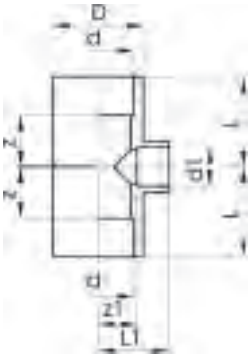

Tee 90° reducing PVC-U metric

d (mm)	d1 (mm)	PN (bar)	d-d (inch)	Code	Weight (kg)	z (mm)	z1 (mm)	D (mm)	L (mm)	L1 (mm)
25	20	16		**721 200 134**	0.038	14	14	33	33	30
32	20	16		**721 200 141**	0.061	17	17	41	39	33
32	25	16		**721 200 138**	0.063	17	17	41	39	36
40	20	16		**721 200 155**	0.103	23	23	50	49	39
40	25	16		**721 200 151**	0.107	23	23	50	49	42
40	32	16		**721 200 147**	0.109	23	23	50	49	45
50	20	16		**721 200 009**	0.179	28	28	62	59	44
50	25	16		**721 200 010**	0.183	28	28	62	59	47
50	32	16		**721 200 164**	0.189	28	28	62	59	50
50	40	16		**721 200 161**	0.208	28	28	62	59	54
63	25	16		**721 200 011**	0.332	35	34	77	73	53
63	32	16		**721 200 178**	0.336	35	34	77	73	56
63	40	16		**721 200 174**	0.347	35	34	77	73	60
63	50	16		**721 200 170**	0.354	35	34	77	73	65
75	32	16		**721 200 181**	0.535	40	41	92	84	63
75	40	16		**721 200 182**	0.555	40	41	92	84	67
75	50	16		**721 200 183**	0.541	40	41	92	84	72
75	63	16		**721 200 184**	0.570	40	41	92	84	79
90	32	16		**721 200 142**	0.855	46	55	110	97	77
90	50	16		**721 200 144**	0.907	46	55	110	97	86
90	63	16		**721 200 145**	0.931	46	55	110	97	93
90	75	16		**721 200 146**	0.959	46	55	110	97	99
110	32	16		**721 200 135**	1.441	56	67	133	117	89
110	50	16		**721 200 136**	1.471	56	67	133	117	98
110	63	16		**721 200 132**	1.522	56	65	133	117	103
110	75	16		**721 200 133**	1.543	56	65	133	117	109
110	90	16		**721 200 137**	1.634	56	65	133	117	116
125	50	16		**721 200 139**	1.970	64	75	151	133	106
125	90	16		**721 200 140**	2.200	64	75	151	133	126
140	50	16		**721 200 148**	3.235	72	82	172	148	113
140	75	16	5 - 2 ½	**721 200 149**	3.319	72	78	172	148	122
140	110	16		**721 200 150**	3.422	72	74	172	148	135
160	110	16		**721 200 152**	4.305	81	81	192	167	142
200	110	10		**721 200 153**	8.782	107	131	232	213	192
200	160	10		**721 200 154**	8.036	107	106	232	213	192
225	110	10		**721 200 156**	10.619	120	143	257	239	204
225	160	10		**721 200 157**	9.760	120	119	257	239	205
250	160	10		**721 200 159**	14.520	132	151	282	263	237
250	200	10		**721 200 162**	12.213	132	131	282	263	237
280	160	10		**721 200 165**	18.402	120	180	318	266	266
280	225	10		**721 200 167**	16.145	120	148	318	266	268
315	160	6		**721 200 169**	22.189	120	197	356	284	283
315	225	6		**721 200 172**	20.154	120	165	356	284	284
400	225	6		**721 200 176**	40.000	163	258	442	369	377
400	315	6		**721 200 180**	35.000	163	213	442	369	377



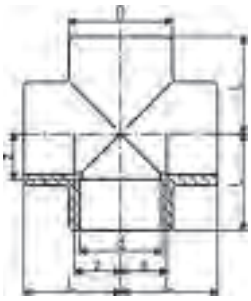

Cross PVC-U metric

d (mm)	d (inch)	PN (bar)	Code	Weight (kg)	D (mm)	L (mm)	z (mm)
10		16	**721 300 103**	0.009	16	19	7
12		16	**721 300 104**	0.010	18	20	8
16		16	**721 300 105**	0.020	23	24	10
20		16	**721 300 106**	0.036	29	27	11
25		16	**721 300 107**	0.054	35	33	14
32		16	**721 300 108**	0.092	43	39	17
40		16	**721 300 109**	0.155	52	49	23
50		16	**721 300 110**	0.259	63	59	28
63		16	**721 300 111**	0.482	79	72	34
75	2 ½	10	**721 300 112**	0.725	92	83	40
90		10	**721 300 113**	1.221	106	97	48
110		10	**721 300 114**	2.111	128	117	59





Tee 45° PVC-U metric

d (mm)	d (inch)	PN (bar)	Code	Weight (kg)	z (mm)	z1 (mm)	D (mm)	L (mm)	L1 (mm)
10		10	**721 250 103**	0.013	18	4	16	46	30
12		10	**721 250 104**	0.014	21	4	18	49	33
16		10	**721 250 105**	0.022	25	5	23	58	39
20		10	**721 250 106**	0.035	30	6	28	68	46
25		10	**721 250 107**	0.056	36	9	33	83	55
32		10	**721 250 108**	0.096	45	10	41	99	67
40		10	**721 250 109**	0.159	56	10	50	118	82
50		10	**721 250 110**	0.265	66	12	60	140	97
63		10	**721 250 111**	0.439	85	14	74	175	123
75	2 ½	6	**721 250 112**	0.816	101	18	91	207	145
90		6	**721 250 113**	1.275	122	20	107	245	173
110		6	**721 250 114**	2.579	149	27	134	298	210
125		6	**721 250 115**	3.616	167	30	147	335	236
140	5	6	**721 250 116**	5.628	190	34	168	376	266
160		6	**721 250 117**	7.187	213	41	190	428	300
200		6	**721 250 119**	12.314	265	48	232	527	372
225		6	**721 250 120**	15.735	296	54	260	590	416
250		6	**721 250 121**	20.350	330	60	286	654	462





Socket equal PVC-U metric

[1] Socket d355 and d400 fabricated from pipe

d (mm)	d (inch)	PN (bar)	Code	Weight (kg)	z (mm)	D (mm)	L (mm)
6		16	**721 910 101**	0.004	3	12	27
8		16	**721 910 102**	0.005	3	14	27
10		16	**721 910 103**	0.004	3	16	27
12		16	**721 910 104**	0.004	3	19	27
16		16	**721 910 105**	0.006	3	22	31
20		16	**721 910 106**	0.011	3	26	35
25		16	**721 910 107**	0.015	3	32	41
32		16	**721 910 108**	0.026	3	39	47
40		16	**721 910 109**	0.045	3	48	55
50		16	**721 910 110**	0.064	3	58	65
63		16	**721 910 111**	0.118	3	73	79
75	2 ½	16	**721 910 112**	0.188	4	87	92

table continued on the next page



d (mm)	d (inch)	PN (bar)	Code	Weight (kg)	z (mm)	D (mm)	L (mm)
90		16	**721 910 113**	0.328	5	105	107
110		16	**721 910 114**	0.554	6	128	128
125		16	**721 910 115**	0.825	7	142	145
140	5	16	**721 910 116**	1.118	7	162	159
160		16	**721 910 117**	1.540	8	183	180
200		10	**721 910 119**	2.559	9	221	221
225		10	**721 910 120**	3.519	10	253	248
250		10	**721 910 121**	5.394	16	284	284
280		10	**721 910 122**	8.312	16	321	314
315		6	**721 910 123**	10.388	16	356	348
355		6	**721 910 124**	10.706	68	377	454
400		6	**721 910 125**	11.326	73	425	505



Socket equal PVC-U transparent metric

d (mm)	PN (bar)	Code	Weight (kg)	z (mm)	D (mm)	L (mm)
16	16	**752 910 105**	0.009	3	23	31
20	16	**752 910 106**	0.012	3	27	35
25	16	**752 910 107**	0.016	3	32	41
32	16	**752 910 108**	0.027	3	40	47
40	16	**752 910 109**	0.061	3	52	55
50	16	**752 910 110**	0.068	3	60	65
63	16	**752 910 111**	0.115	3	75	79



Adaptor socket PVC-U metric Inch/BS

Model:

- With solvent cement sockets metric and BS inch

d (mm)	d (inch)	PN (bar)	Code	Weight (kg)	z (mm)	D (mm)	L (mm)
16	⅜	16	**721 913 105**	0.010	5	23	35
20	½	16	**721 913 106**	0.012	5	27	38
25	¾	16	**721 913 107**	0.020	5	33	45
32	1	16	**721 913 108**	0.031	5	41	51
40	1 ¼	16	**721 913 109**	0.054	5	51	60
50	1 ½	16	**721 913 110**	0.074	4	59	65
63	2	16	**721 913 111**	0.155	5	75	79
90	3	16	**721 913 113**	0.340	6	104	108
110	4	16	**721 913 115**	0.488	4	128	128



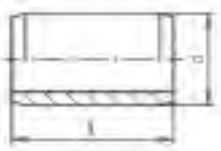

Barrel nipple PVC-U metric

Model:

- With solvent cement spigots on both sides
- Overall length L = 2 x socket length
- For the shortest possible distance between fittings

d (mm)	d (inch)	PN (bar)	Code	Weight (kg)	L (mm)
16		16	**721 900 905**	0.002	28
20		16	**721 900 906**	0.005	32
25		16	**721 900 907**	0.009	38
32		16	**721 900 908**	0.015	44
40		16	**721 900 909**	0.027	52
50		16	**721 900 910**	0.048	62
63		16	**721 900 911**	0.092	76
75	2 ½	16	**721 900 912**	0.156	88
90		16	**721 900 913**	0.260	102
110		16	**721 900 914**	0.455	122
125		16	**721 900 915**	0.673	138
140	5	16	**721 900 916**	0.932	152
160		16	**721 900 917**	1.565	192
200		10	**721 900 919**	1.779	212
225		10	**721 900 920**	2.566	238





Cap PVC-U metric

d (mm)	d (inch)	PN (bar)	Code	Weight (kg)	D (mm)	L (mm)
12		16	**721 960 104**	0.004	19	15
16		16	**721 960 105**	0.005	23	21
20		16	**721 960 106**	0.008	27	24
25		16	**721 960 107**	0.013	33	28
32		16	**721 960 108**	0.020	40	32
40		16	**721 960 109**	0.029	47	38
50		16	**721 960 110**	0.051	59	45
63		16	**721 960 111**	0.095	74	56
75	2 ½	16	**721 960 112**	0.152	87	65
90		16	**721 960 113**	0.269	105	77
110		16	**721 960 114**	0.457	128	94
140	5	10	**721 960 116**	1.036	164	92
160		10	**721 960 117**	1.534	188	130
200		10	**721 960 119**	2.614	230	170
225		10	**721 960 120**	3.320	257	185
280		10	**721 960 122**	6.200	318	230
315		6	**721 960 123**	8.500	356	255



Reducing bush long PVC-U metric

Model:

- With solvent cement spigot and socket metric

d (mm)	d2 (mm)	PN (bar)	Code	Weight (kg)	z (mm)	L (mm)
8	6	16	**721 910 323**	0.003	15	27
10	6	16	**721 910 326**	0.003	15	27
10	8	16	**721 910 325**	0.003	15	27
20	16	16	**721 910 334**	0.009	21	35
25	20	16	**721 910 337**	0.014	25	41
32	25	16	**721 910 341**	0.024	30	49
40	32	16	**721 910 346**	0.044	36	58
50	40	16	**721 910 352**	0.074	44	70
63	50	16	**721 910 358**	0.148	54	85
75	63	16	**721 910 364**	0.211	62	100
90	75	16	**721 910 370**	0.335	74	118
140	110	16	**721 910 385**	0.808	111	172

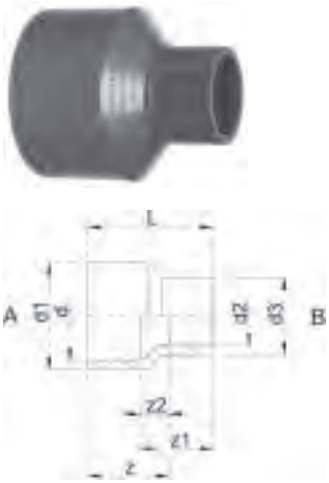

PRO-FIT reducing bush PVC-U metric

Model:

- Outlet: A and B = solvent cemented spigot in combination with reducing socket metric

d (mm)	d1 (mm)	d3 (mm)	PN (bar)	d2 (mm)	Code	Weight (kg)	z (mm)	z1 (mm)	z2 (mm)	L (mm)
10	14	12	16	8	**721 910 903**	0.003	15	15	3	27
12	16	12	16	8	**721 910 905**	0.004	18	18	6	30
12	16	16	16	10	**721 910 906**	0.004	18	18	6	30
16	20	16	16	10	**721 910 908**	0.003	21	19	7	33
16	20	16	16	12	**721 910 909**	0.004	21	19	7	33
20	25	16	16	12	**721 910 910**	0.008	25	21	9	37
20	25	20	16	16	**721 910 911**	0.008	25	23	9	39
25	32	16	16	12	**721 910 912**	0.014	30	23	11	42
25	32	20	16	16	**721 910 913**	0.015	30	26	12	44
25	32	25	16	20	**721 910 914**	0.017	30	27	11	46
32	40	20	16	16	**721 910 915**	0.025	36	28	14	50
32	40	25	16	20	**721 910 916**	0.026	36	30	14	52
32	40	32	16	25	**721 910 917**	0.031	36	33	14	55
40	50	25	16	20	**721 910 918**	0.045	44	34	18	60
40	50	32	16	25	**721 910 919**	0.052	44	37	18	63
40	50	40	16	32	**721 910 920**	0.058	44	40	18	66
50	63	32	16	25	**721 910 921**	0.092	54	42	23	73
50	63	40	16	32	**721 910 922**	0.098	54	45	23	76
50	63	50	16	40	**721 910 923**	0.111	54	49	23	80
63	75	40	16	32	**721 910 924**	0.127	62	46	24	84
63	75	50	16	40	**721 910 925**	0.139	62	50	24	88
63	75	63	16	50	**721 910 926**	0.167	62	55	24	93
75	90	50	16	40	**721 910 927**	0.224	74	56	30	100
75	90	63	16	50	**721 910 928**	0.253	74	61	30	105
75	90	75	16	63	**721 910 929**	0.265	74	68	30	112





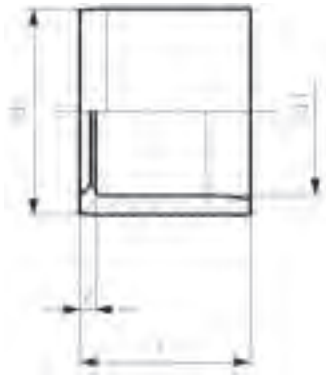

Reducing bush short PVC-U metric

Model:

- With solvent cement spigot and socket metric

	d (mm)	d1 (mm)	PN (bar)	Code	Weight (kg)	z (mm)	L (mm)
*	12	8	16	**721 900 329**	0.002	2	14
*	16	12	16	**721 900 331**	0.002	2	14
*	20	16	16	**721 900 334**	0.002	2	16
*	25	20	16	**721 900 337**	0.004	3	19
*	32	20	16	**721 900 342**	0.014	6	22
*	32	25	16	**721 900 341**	0.009	3	22
	40	20	16	**721 900 348**	0.021	10	26
	40	25	16	**721 900 347**	0.021	7	26
*	40	32	16	**721 900 346**	0.016	4	26
	50	20	16	**721 900 355**	0.037	15	31
	50	25	16	**721 900 354**	0.034	12	31
	50	32	16	**721 900 353**	0.036	9	31
*	50	40	16	**721 900 352**	0.030	5	31
	63	32	16	**721 900 360**	0.064	16	38
	63	40	16	**721 900 359**	0.067	12	38
*	63	50	16	**721 900 358**	0.058	7	38
	75	50	16	**721 900 365**	0.109	13	44
*	75	63	16	**721 900 364**	0.078	6	44
	90	50	16	**721 900 372**	0.181	20	51
	90	63	16	**721 900 371**	0.183	13	51
*	90	75	16	**721 900 370**	0.135	7	51
	110	50	16	**721 900 379**	0.316	30	61
	110	63	16	**721 900 378**	0.308	23	61
	110	75	16	**721 900 377**	0.295	17	61
*	110	90	16	**721 900 376**	0.259	10	61
	125	90	16	**721 900 381**	0.465	18	69
*	125	110	16	**721 900 380**	0.267	8	69
	140	90	16	**721 900 386**	0.562	25	76
*	140	110	16	**721 900 385**	0.605	15	76
*	140	125	16	**721 900 384**	0.331	7	76
	160	90	16	**721 900 391**	0.751	35	86
	160	110	16	**721 900 390**	0.883	25	86
*	160	140	16	**721 900 388**	0.551	10	86
	200	110	10	**721 900 393**	1.985	45	108
	200	125	10	**721 900 325**	2.024	37	108
	200	140	10	**721 900 394**	1.928	29	108
*	200	160	10	**721 900 392**	1.085	20	108
	225	110	10	**721 900 397**	2.544	57	120
	225	125	10	**721 900 399**	2.563	49	120
	225	140	10	**721 900 398**	2.609	41	120
	225	160	10	**721 900 396**	2.199	31	119
*	225	200	10	**721 900 181**	1.360	13	119
	250	125	10	**721 900 326**	3.150	11	131
	250	140	10	**721 900 300**	3.200	54	133
	250	160	10	**721 900 301**	3.390	44	133
*	250	200	10	**721 900 302**	3.198	24	133
*	250	225	10	**721 900 303**	1.686	11	133
	280	140	10	**721 900 307**	4.157	69	148
	280	160	10	**721 900 308**	4.170	60	148
	280	200	10	**721 900 304**	4.577	39	148
*	280	225	10	**721 900 305**	4.409	27	146
*	280	250	10	**721 900 306**	2.515	14	148
	315	160	6	**721 900 313**	5.188	77	166
	315	200	6	**721 900 309**	5.480	57	166
	315	225	6	**721 900 310**	6.035	44	166
*	315	250	6	**721 900 311**	6.481	32	166
*	315	280	6	**721 900 312**	4.055	28	167
	355	315	6	**721 900 315**	5.792	23	206

table continued on the next page

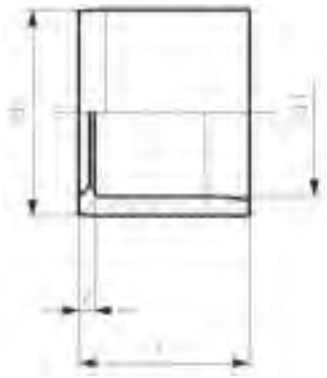

	d (mm)	d1 (mm)	PN (bar)	Code	Weight (kg)	z (mm)	L (mm)
	400	250	6	**721 900 319**	11.528	60	206
	400	280	6	**721 900 320**	11.366	60	206
*	400	315	6	**721 900 321**	13.006	42	206
*	400	355	6	**721 900 322**	7.524	22	206

Adaptor fittings



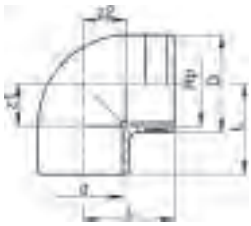

Elbow 90° PVC-U metric Rp

Model:

- With solvent cement socket metric and parallel female thread Rp
- Reinforcing ring stainless (A2)
- Connection to plastic or metal threads
- Install with low mechanical stress and avoid large cyclic temperature changes
- Do not use thread sealing pastes that are harmful to PVC-U

as long as stocks last

d (mm)	Rp (inch)	PN (bar)	Code	Weight (kg)	z1 (mm)	z2 (mm)	D (mm)	L (mm)
12	¼	16	**721 100 204**	0.010	7	7	20	19
16	⅜	16	**721 100 205**	0.015	9	9	25	23
20	½	16	**721 100 206**	0.023	13	11	30	27
25	¾	16	**721 100 207**	0.035	16	15	35	33
32	1	16	**721 100 208**	0.060	19	19	45	39
40	1 ¼	16	**721 100 209**	0.122	23	27	55	50
50	1 ½	16	**721 100 210**	0.187	27	36	62	58
63	2	16	**721 100 211**	0.324	33	46	75	73





Tee 90° PVC-U metric Rp

Model:

- With solvent cement socket metric, branch with parallel female thread Rp
- Reinforcing ring stainless (A2)
- Connection to plastic or metal threads
- Install with low mechanical stress and avoid large cyclic temperature changes
- Do not use thread sealing pastes that are harmful to PVC-U

d (mm)	Rp (inch)	PN (bar)	Code	Weight (kg)	z1 (mm)	z2 (mm)	D (mm)	D1 (mm)	L (mm)
12	¼	16	**721 200 204**	0.015	7	7	17	20	19
16	⅜	16	**721 200 205**	0.027	9	9	21	25	23
20	½	16	**721 200 206**	0.029	11	13	26	30	29
25	¾	16	**721 200 207**	0.043	14	15	32	35	33
32	1	16	**721 200 208**	0.080	17	19	40	45	39
40	1 ¼	16	**721 200 209**	0.134	23	26	47	55	49
50	1 ½	16	**721 200 210**	0.212	27	36	59	59	59
63	2	16	**721 200 211**	0.379	33	46	74	75	71



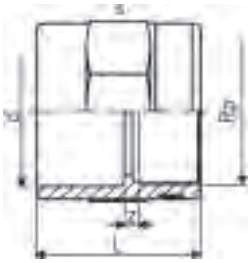

Adaptor socket PVC-U metric Rp

Model:

- With solvent cement socket metric and parallel female thread Rp
- Reinforcing ring stainless (A2)
- Connection to plastic or metal threads
- Install with low mechanical stress and avoid large cyclic temperature changes
- Do not use thread sealing pastes that are harmful to PVC-U

d (mm)	Rp (inch)	PN (bar)	Code	Weight (kg)	z (mm)	L (mm)	s (mm)
12	¼	16	**721 910 204**	0.010	4	27	22
16	⅜	16	**721 910 205**	0.016	5	31	27
20	½	16	**721 910 206**	0.025	5	36	32
25	¾	16	**721 910 207**	0.032	5	40	36
32	1	16	**721 910 208**	0.057	5	45	46
40	1 ¼	16	**721 910 209**	0.087	5	51	55
50	1 ½	16	**721 910 210**	0.126	7	59	65
63	2	16	**721 910 211**	0.206	7	69	80





Adaptor socket PVC-U metric Rp

Model:

- With solvent cement socket metric and parallel female thread Rp
- Connection to plastic thread only
- Install with low mechanical stress and avoid large cyclic temperature changes
- Do not use thread sealing pastes that are harmful to PVC-U

d (mm)	Rp (inch)	PN (bar)	Code	Weight (kg)	z (mm)	L (mm)	s (mm)
75	2 ½	10	**721 916 012**	0.220	7	82	90
90	3	10	**721 916 013**	0.365	9	94	110
110	4	10	**721 916 014**	0.536	9	110	130





Adaptor socket PVC-U metric NPT

Model:

- With solvent cement socket metric and NPT (ASTM) taper female thread
- Connection to plastic thread only
- Install with low mechanical stress and avoid large cyclic temperature changes
- Do not use thread sealing pastes that are harmful to PVC-U

d (mm)	NPT (inch)	PN (bar)	Code	Weight (kg)	z (mm)	L (mm)	s (mm)
20	½	10	**721 914 206**	0.021	5	35	32
25	¾	10	**721 914 207**	0.028	6	40	36
32	1	10	**721 914 208**	0.049	6	45	46
40	1 ¼	10	**721 914 209**	0.076	6	51	55
50	1 ½	10	**721 914 210**	0.110	10	59	65
63	2	10	**721 914 211**	0.175	10	69	80



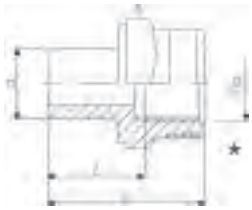

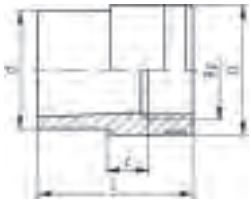

Reducing bush PVC-U metric Rp

Model:

- With solvent cement spigot metric and parallel female thread Rp
- Reinforcing ring stainless (A2)
- Connection to plastic or metal threads
- Install with low mechanical stress and avoid large cyclic temperature changes
- Do not use thread sealing pastes that are harmful to PVC-U

	d (mm)	Rp (inch)	PN (bar)	Code	Weight (kg)	z (mm)	D (mm)	L (mm)	s (mm)
*	12	¼	16	**721 910 404**	0.008	0	20	27	22
	20	⅜	16	**721 910 434**	0.014	7	25	35	
	25	½	16	**721 910 437**	0.021	7	30	41	
	32	¾	16	**721 910 441**	0.032	15	35	48	
	40	1	16	**721 910 446**	0.058	20	45	56	
	50	1 ¼	16	**721 910 452**	0.097	20	55	66	
	63	1 ½	16	**721 910 458**	0.151	10	62	77	





Adaptor bush equal PVC-U metric Rp

Model:

- With solvent cement spigot metric and parallel female thread Rp
- Connection to plastic thread only
- Install with low mechanical stress and avoid large cyclic temperature changes
- Do not use thread sealing pastes that are harmful to PVC-U

d (mm)	Rp (inch)	PN (bar)	Code	Weight (kg)	z (mm)	D (mm)	L (mm)
20	½	10	**721 900 406**	0.012	22	28	37
25	¾	10	**721 900 407**	0.018	25	34	41
32	1	10	**721 900 408**	0.035	29	42	48
40	1 ¼	10	**721 900 409**	0.063	34	52	56
50	1 ½	10	**721 900 410**	0.097	40	62	61
63	2	10	**721 900 411**	0.170	49	77	74





Adaptor socket nipple PVC-U metric R

Model:

- With solvent cement spigot/socket reducing metric and taper male thread R
- Install with low mechanical stress and avoid large cyclic temperature changes
- Do not use thread sealing pastes that are harmful to PVC-U

d (mm)	d1 (mm)	R (inch)	PN (bar)	Code	Weight (kg)	z (mm)	z1 (mm)	s (mm)
12	16	⅜	16	**721 910 555**	0.010	35	23	27
16	20	½	16	**721 910 556**	0.016	42	28	32
20	25	¾	16	**721 910 557**	0.023	47	31	36
25	32	1	16	**721 910 558**	0.040	54	35	46
32	40	1 ¼	16	**721 910 559**	0.061	60	38	55
40	50	1 ½	16	**721 910 560**	0.094	66	40	65
50	63	2	16	**721 910 561**	0.164	78	47	80





Adaptor bush equal PVC-U metric R

Model:

- With solvent cement socket metric and taper male thread R
- Install with low mechanical stress and avoid large cyclic temperature changes
- Do not use thread sealing pastes that are harmful to PVC-U

d (inch)	R (inch)	d (mm)	PN (bar)	Code	Weight (kg)	z (mm)	L (mm)	s (mm)
⅜	⅜	16	16	**721 910 705**	0.011	20	34	27
½	½	20	16	**721 910 706**	0.018	24	40	32
¾	¾	25	16	**721 910 707**	0.025	25	44	36
1	1	32	16	**721 910 708**	0.039	28	50	46
1 ¼	1 ¼	40	16	**721 910 709**	0.061	31	57	55
1 ½	1 ½	50	16	**721 910 710**	0.092	32	63	65
2	2	63	16	**721 910 711**	0.161	38	76	80
2 ½	2 ½	75	10	**721 910 712**	0.227	42	86	90
3	3	90	10	**721 910 713**	0.389	46	97	110
4	4	110	10	**721 910 714**	0.572	53	114	130





Adaptor nipple PVC-U metric R

Model:

- With solvent cement spigot metric and taper male thread R
- Install with low mechanical stress and avoid large cyclic temperature changes
- Do not use thread sealing pastes that are harmful to PVC-U

d (mm)	R (inch)	PN (bar)	Code	Weight (kg)	z (mm)
16	⅜	10	**721 913 505**	0.006	31
20	½	10	**721 913 506**	0.010	35
25	¾	10	**721 913 507**	0.017	40
32	1	10	**721 913 508**	0.026	46





Adaptor socket brass/PVC-U metric R

Model:

- Brass with taper male thread R and PVC-U solvent cement socket insert, metric
- Install with low mechanical stress and avoid large cyclic temperature changes

d (mm)	R (inch)	PN (bar)	Code	Weight (kg)	z (mm)	L (mm)	s (mm)
40	1 ¼	16	**720 910 709**	0.437	36	64	58
50	1 ½	16	**720 910 710**	0.671	38	72	70
63	2	16	**720 910 711**	1.035	43	84	85





Adaptor socket brass/PVC-U metric Rp

Model:

- Brass with parallel female thread Rp and PVC-U solvent cement socket insert, metric
- Install with low mechanical stress and avoid large cyclic temperature changes

d (mm)	Rp (inch)	PN (bar)	Code	Weight (kg)	z (mm)	L (mm)	s (mm)
40	1 ¼	16	**720 910 209**	0.482	17	66	58
50	1 ½	16	**720 910 210**	0.737	19	74	70
63	2	16	**720 910 211**	1.130	19	86	83





Manometer adaptor sockets PVC-U metric G

Model:

- With solvent cement socket metric and female thread G
- Reinforcing ring stainless (A2)
- Connection to plastic or metal threads
- Do not use thread sealing pastes that are harmful to PVC-U
- Install with low mechanical stress and avoid large cyclic temperature changes

d (mm)	G (inch)	PN (bar)	Code	Weight (kg)	z (mm)	L (mm)	s (mm)
12	¼	16	**721 916 204**	0.010	4	27	22
16	½	16	**721 916 206**	0.026	7	36	32





Hose connector PVC-U metric

Model:

- With solvent cement spigot metric and tapered hose connection

d (mm)	PN (bar)	Code	Weight (kg)	d1 (mm)	D (mm)	L (mm)
10	16	**721 960 303**	0.004	6	12	51
12	16	**721 960 304**	0.004	6	12	51
16	16	**721 960 305**	0.007	8	16	57
20	16	**721 960 306**	0.016	11	22	73



Hose connector PVC-U metric

Model:

- With solvent cement spigot metric and parallel hose connection

d (mm)	PN (bar)	Code	Weight (kg)	D (mm)	L (mm)
10	16	**721 960 403**	0.002	8	47
12	16	**721 960 404**	0.003	12	51
16	16	**721 960 405**	0.008	16	57
20	16	**721 960 406**	0.016	20	73
25	16	**721 960 407**	0.021	25	79
32	16	**721 960 408**	0.035	30	89
40	16	**721 960 409**	0.060	40	100
50	16	**721 960 410**	0.112	50	105
63	16	**721 960 411**	0.180	60	120

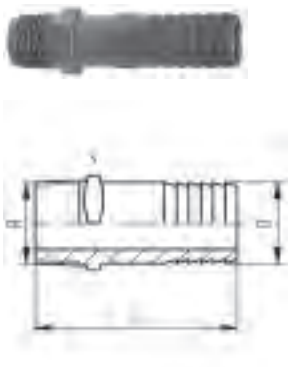

Hose connector PVC-U R

Model:

- With taper male thread R
- With parallel hose connector
- Do not use thread sealing pastes that are harmful to PVC-U

R (inch)	PN (bar)	Code	Weight (kg)	D (mm)	L (mm)	s (mm)
¼	10	**721 960 704**	0.003	12	59	14
⅜	10	**721 960 705**	0.006	16	67	19
½	10	**721 960 706**	0.019	20	86	22
¾	10	**721 960 707**	0.026	25	92	27
1	10	**721 960 708**	0.048	30	103	36
1 ¼	10	**721 960 709**	0.079	40	115	46



Hose connector PVC-U R reduced

Model:

- With taper male thread R
- With parallel hose connector
- Connection to plastic thread only
- Do not use thread sealing pastes that are harmful to PVC-U

R (inch)	Code	Weight (kg)	s (mm)	d (mm)	L (mm)
½	**721 961 706**	0.012	22	14	70
¾	**721 961 707**	0.021	27	20	80
1	**721 961 708**	0.042	36	27	90





Adaptor fitting PVC-U metric - Victaulic

Model:

- With solvent cement spigot and socket metric
- For metal couplings (type Victaulic)

d (mm)	d1 (mm)	d2 (inch)	PN (bar)	Code	Weight (kg)	L (mm)	z (mm)
50	40	1 ½	10	**721 910 090**	0.150	71	45
63	50	2	10	**721 910 091**	0.200	78	47
75	63	2 ½	10	**721 910 092**	0.250	84	46



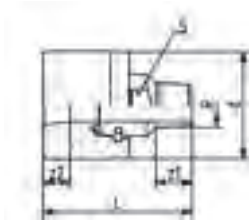

Adaptor fitting PVC-U/stainless steel

Model:

- Stainless steel WN 1.4404 (3162) with taper male thread R
- Gasket: O-ring EPDM

d (mm)	R (inch)	PN (bar)	Code	Weight (kg)	z1 (mm)	z2 (mm)	L (mm)	S (mm)
40	½	10	**721 940 631**	0.335	17.0	12.4	63.2	25
50	½	10	**721 940 632**	0.402	17.0	12.5	69.2	25
50	¾	10	**721 940 633**	0.414	18.5	13.0	72.9	30
63	½	10	**721 940 634**	0.521	17.0	7.1	81.2	25
63	¾	10	**721 940 635**	0.533	18.5	13.0	84.9	30
63	1	10	**721 940 636**	0.542	21.5	18.9	89.7	36





Adaptor fitting PVC-U/stainless steel

Model:

- Stainless steel WN 1.4404 (316L) with parallel female thread Rp
- Gasket: O-ring EPDM

d (mm)	Rp (inch)	PN (bar)	Code	Weight (kg)	z1 (mm)	z2 (mm)	L (mm)	S (mm)
40	½	10	**721 940 131**	0.267	17.0	12.4	63.2	25
50	½	10	**721 940 132**	0.345	17.0	12.5	69.2	25
50	¾	10	**721 940 133**	0.352	18.5	13.0	72.9	30
63	½	10	**721 940 134**	0.432	17.0	7.1	81.2	25
63	¾	10	**721 940 135**	0.441	18.5	13.0	84.9	30
63	1	10	**721 940 136**	0.453	21.5	18.9	89.7	36



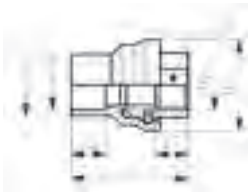

Adaptor Fitting PVC-U/stainless steel Rp

Model:

- Adaptor fitting equally suitable as socket and spigot
- Stainless steel WN 1.4404 (316L) with parallel female thread Rp
- Gasket: O-ring EPDM

d (mm)	D (mm)	PN (bar)	Rp (inch)	Code	Weight (kg)	z1 (mm)	z2 (mm)	D1 (mm)	L (mm)	S (mm)
20	25	16	½	**721 940 106**	0.095	17	17	40	70	25
25	32	16	¾	**721 940 107**	0.171	19	19	50	83	30
32	40	16	1	**721 940 108**	0.262	22	23	59	96	36





Adaptor Fitting PVC-U/stainless steel R

Model:

- Adaptor fitting equally suitable as socket and spigot
- Stainless steel with taper male thread R
- Gasket: O-ring EPDM

PN (bar)	D (mm)	R (inch)	d (mm)	Code	Weight (kg)	D1 (mm)	S (mm)	z2 (mm)	z1 (mm)	L (mm)
16	25	½	20	**721 940 606**	0.120	40	25	17	17	70
16	32	¾	25	**721 940 607**	0.213	50	30	19	19	83
16	40	1	32	**721 940 608**	0.320	59	36	23	22	96





Adaptor fitting PVC-U/brass

Model:

- Brass with parallel female thread Rp
- Gasket: O-ring EPDM

d (mm)	Rp (inch)	PN (bar)	Code	Weight (kg)	z1 (mm)	z2 (mm)	L (mm)	S (mm)
40	½	10	**721 950 131**	0.279	17.0	12.4	48.2	25
50	½	10	**721 950 132**	0.355	17.0	12.5	54.2	25
50	¾	10	**721 950 133**	0.362	18.5	13.0	54.9	30
63	½	10	**721 950 134**	0.526	17.0	7.1	66.2	25
63	¾	10	**721 950 135**	0.531	18.5	13.0	66.9	30
63	1	10	**721 950 136**	0.542	21.5	18.9	70.7	36



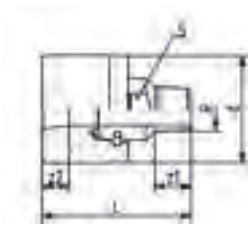

Adaptor fitting PVC-U/brass

Model:

- Brass with taper male thread R
- Gasket: O-ring EPDM

d (mm)	R (inch)	PN (bar)	Code	Weight (kg)	z1 (mm)	z2 (mm)	L (mm)	S (mm)
40	½	10	**721 950 631**	0.352	17.0	12.4	63.2	25
50	½	10	**721 950 632**	0.438	17.0	12.5	69.2	25
50	¾	10	**721 950 633**	0.442	18.5	13.0	72.9	30
63	½	10	**721 950 634**	0.498	17.0	7.1	81.2	25
63	¾	10	**721 950 635**	0.512	18.5	13.0	84.9	30
63	1	10	**721 950 636**	0.521	21.5	18.9	89.7	36



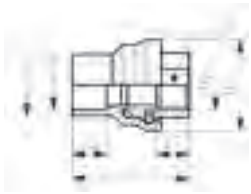

Adaptor Fitting PVC-U/brass Rp

Model:

- Adaptor fitting equally suitable as socket and spigot
- Brass with parallel female thread Rp
- Gasket: O-ring EPDM

d (mm)	D (mm)	PN (bar)	Rp (inch)	Code	Weight (kg)	z1 (mm)	z2 (mm)	D1 (mm)	L (mm)	S (mm)
20	25	16	½	**721 950 106**	0.098	17.0	16.5	40	54.5	25
25	32	16	¾	**721 950 107**	0.181	18.5	19.0	50	65.2	30
32	40	16	1	**721 950 108**	0.270	21.5	22.5	59	76.5	36





Adaptor Fitting PVC-U/brass R

Model:

- Adaptor fitting equally suitable as socket and spigot
- Brass with taper male thread R
- Gasket: O-ring EPDM

d (mm)	D (mm)	PN (bar)	R (inch)	Code	Weight (kg)	z1 (mm)	z2 (mm)	D1 (mm)	L (mm)	S (mm)
20	25	16	½	**721 950 606**	0.129	17	17	40	70	25
25	32	16	¾	**721 950 607**	0.232	19	19	50	83	30
32	40	16	1	**721 950 608**	0.390	22	23	59	96	36

Threaded fittings



Elbow 90° PVC-U Rp

Model:

- With parallel female thread Rp
- Connection to plastic thread only
- Install with low mechanical stress and avoid large cyclic temperature changes
- Do not use thread sealing pastes that are harmful to PVC-U

Rp (inch)	PN (bar)	Code	Weight (kg)	z (mm)	D (mm)	L (mm)
⅜	10	**721 101 605**	0.013	9	23	23
½	10	**721 101 606**	0.017	12	27	27
¾	10	**721 101 607**	0.029	15	33	33
1	10	**721 101 608**	0.042	19	39	39
1 ¼	10	**721 101 609**	0.070	27	48	49
1 ½	10	**721 101 610**	0.178	35	61	59
2	10	**721 101 611**	0.322	44	75	72





Tee 90° equal PVC-U Rp

Model:

- With parallel female thread Rp
- Connection to plastic thread only
- Install with low mechanical stress and avoid large cyclic temperature changes
- Do not use thread sealing pastes that are harmful to PVC-U

Rp (inch)	PN (bar)	Code	Weight (kg)	z (mm)	D (mm)	L (mm)
⅜	10	**721 201 605**	0.016	9	23	23
½	10	**721 201 606**	0.027	12	28	27
¾	10	**721 201 607**	0.039	15	33	33
1	10	**721 201 608**	0.072	19	41	39
1 ¼	10	**721 201 609**	0.146	27	50	49
1 ½	10	**721 201 610**	0.267	36	62	60
2	10	**721 201 611**	0.485	44	77	72





Socket PVC-U Rp

Model:

- With parallel female thread Rp
- Connection to plastic thread only
- Do not use thread sealing pastes that are harmful to PVC-U
- Install with low mechanical stress and avoid large cyclic temperature changes

Rp (inch)	PN (bar)	Code	Weight (kg)	z (mm)	L (mm)	s (mm)
¼	10	**721 910 604**	0.010	7	27	22
⅜	10	**721 910 605**	0.015	7	29	27
½	10	**721 910 606**	0.024	9	35	32
¾	10	**721 910 607**	0.029	9	39	36
1	10	**721 910 608**	0.053	11	45	46
1 ¼	10	**721 910 609**	0.076	11	49	55
1 ½	10	**721 910 610**	0.106	11	49	65
2	10	**721 910 611**	0.180	11	57	80





Reducing bush PVC-U R Rp

Model:

- With taper male thread R and parallel female thread Rp
- Connection to plastic thread only
- Install with low mechanical stress and avoid large cyclic temperature changes
- Do not use thread sealing pastes that are harmful to PVC-U

R (inch)	Rp (inch)	PN (bar)	Code	Weight (kg)	z (mm)	L (mm)	s (mm)
½	⅜	10	**721 910 834**	0.014	25	36	27
¾	½	10	**721 910 837**	0.021	25	39	32
1	½	10	**721 910 842**	0.029	31	45	32
1	¾	10	**721 910 841**	0.031	29	45	36
1 ¼	1	10	**721 910 846**	0.050	32	50	46
1 ½	1 ¼	10	**721 910 852**	0.065	35	55	55
2	1 ½	10	**721 910 858**	0.127	45	65	65



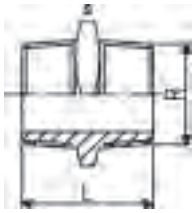

Threaded nipple R PVC-U

Model:

- With taper male thread R
- Install with low mechanical stress and avoid large cyclic temperature changes
- Do not use thread sealing pastes that are harmful to PVC-U

R (inch)	PN (bar)	Type	Code	Weight (kg)	L (mm)	s (mm)
⅜	10	A	**721 911 905**	0.007	37	19
½	10	A	**721 911 906**	0.012	45	22
¾	10	A	**721 911 907**	0.019	49	27
1	10	A	**721 911 908**	0.034	57	36
1 ¼	10	A	**721 911 909**	0.052	62	46
1 ½	10	A	**721 911 910**	0.070	67	50
2	10	A	**721 911 911**	0.126	76	65





Cap PVC-U Rp

Model:

- With parallel female thread Rp
- Connection to plastic thread only
- Install with low mechanical stress and avoid large cyclic temperature changes
- Do not use thread sealing pastes that are harmful to PVC-U

Rp (inch)	PN (bar)	Code	Weight (kg)	D (mm)	L (mm)	s (mm)
⅛	10	**721 960 603**	0.013	20	14	17
¼	10	**721 960 604**	0.024	25	16	22
⅜	10	**721 960 605**	0.012	31	19	27
½	10	**721 960 606**	0.018	37	21	32
¾	10	**721 960 607**	0.024	42	24	36
1	10	**721 960 608**	0.040	50	26	46
1 ¼	10	**721 960 609**	0.060	60	29	55
1 ½	10	**721 960 610**	0.072	65	31	60
2	10	**721 960 611**	0.127	81	36	75





Plug PVC-U G

Model:

- With parallel male thread G
- Connection to plastic thread only
- Flat gasket necessary for sealing
- Install with low mechanical stress and avoid large cyclic temperature changes
- Do not use thread sealing pastes that are harmful to PVC-U

G (inch)	PN (bar)	Code	Weight (kg)	L (mm)	s (mm)
⅜	10	**721 960 905**	0.005	21	22
½	10	**721 960 906**	0.010	25	27
¾	10	**721 960 907**	0.018	29	36
1	10	**721 960 908**	0.029	32	41
1 ¼	10	**721 960 909**	0.048	36	50
1 ½	10	**721 960 910**	0.070	37	60
2	10	**721 960 911**	0.120	42	75





Plug PVC-U R

Model:

- With taper male thread R
- Install with low mechanical stress and avoid large cyclic temperature changes
- Do not use thread sealing pastes that are harmful to PVC-U

R (inch)	PN (bar)	Code	Weight (kg)	L (mm)	s (mm)
⅜	10	**721 961 905**	0.006	21	22
½	10	**721 961 906**	0.011	25	27
¾	10	**721 961 907**	0.020	29	36
1	10	**721 961 908**	0.030	32	41
1 ¼	10	**721 961 909**	0.048	36	50
1 ½	10	**721 961 910**	0.071	37	60
2	10	**721 961 911**	0.119	42	75

Unions



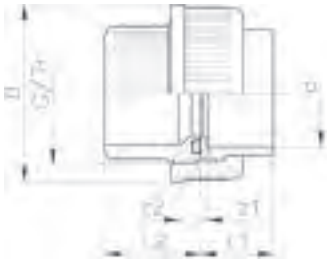

Union for solvent cement jointing PVC-U metric

Model:

- Union End: solvent socket metric
- Union Bush: Solvent socket metric
- Gasket: O-ring EPDM code no. 748 410 004-016; d90 748 410 248
- Jointing face: With O-ring groove

d (mm)	d (inch)	PN (bar)	EPDM Code	Weight (kg)	FPM Code	Weight (kg)
10		16	**721 510 103**	0.021	**721 510 128**	0.020
12		16	**721 510 104**	0.020	**721 510 129**	0.019
16		16	**721 510 105**	0.025	**721 510 130**	0.025
20		16	**721 510 106**	0.041	**721 510 131**	0.042
25		16	**721 510 107**	0.058	**721 510 132**	0.058
32		16	**721 510 108**	0.083	**721 510 133**	0.084
40		16	**721 510 109**	0.147	**721 510 134**	0.152
50		16	**721 510 110**	0.203	**721 510 135**	0.207
63		16	**721 510 111**	0.356	**721 510 136**	0.361
75	2 ½	10	**721 510 112**	0.614	**721 510 137**	0.621
90		10	**721 510 313**	0.920	**721 510 338**	0.929
110		10	**721 510 114**	1.434	**721 510 139**	1.492

d (mm)	z1 (mm)	z2 (mm)	D (mm)	L1 (mm)	L2 (mm)	G/Tr (inch)
10	3	10	31	15	22	5/8
12	3	10	31	15	22	5/8
16	3	10	35	17	24	3/4
20	3	10	43	19	26	1
25	3	10	51	22	29	1 1/4
32	3	10	58	25	33	1 1/2
40	3	12	72	29	39	2
50	3	14	83	34	46	2 1/4
63	3	18	100	41	58	2 3/4
75	3	18	135	47	62	Tr108x5
90	5	18	158	56	69	Tr128x5
110	5	11	188	66	72	Tr154x6







PRO-FIT union PVC-U metric

Model:

- Union End: Solvent cemented spigot in combination with reducing socket metric
- Union Bush: Solvent socket metric
- Gasket: O-ring EPDM code no. 748 410 005-011

	d (mm)	d1 (mm)	PN (bar)	EPDM Code	Weight (kg)	FPM Code	Weight (kg)
*	16	12	16	**721 510 305**	0.029	**721 510 330**	0.029
*	20	16	16	**721 510 306**	0.046	**721 510 331**	0.044
*	25	20	16	**721 510 307**	0.073	**721 510 332**	0.073
*	32	25	16	**721 510 308**	0.097	**721 510 333**	0.095
	40	32	16	**721 510 309**	0.169	**721 510 334**	0.171
	50	40	16	**721 510 310**	0.250	**721 510 335**	0.250
	63	50	16	**721 510 311**	0.437	**721 510 336**	0.449

	d (mm)	G (inch)	z1 (mm)	z2 (mm)	z3 (mm)	D (mm)	L1 (mm)	L2 (mm)
*	16	¾	22	10	24	35	36	24
*	20	1	24	10	26	43	40	26
*	25	1 ¼	25	10	28	51	44	29

table continued on the next page



	d (mm)	G (inch)	z1 (mm)	z2 (mm)	z3 (mm)	D (mm)	L1 (mm)	L2 (mm)
*	32	1 ½	27	10	30	58	49	33
	40	2	31	12	35	74	57	39
	50	2 ¼	35	14	40	83	66	46
	63	2 ¾	39	18	46	100	77	58



Adaptor union PVC-U metric Inch BS

Model:

- Union End: Solvent cement socket metric
- Union Bush: Solvent cement socket BS inch
- Gasket: O-ring EPDM code no. 748 410 005-011
- Gasket: O-ring FPM code no. 749 410 005-011 (to be ordered separately)

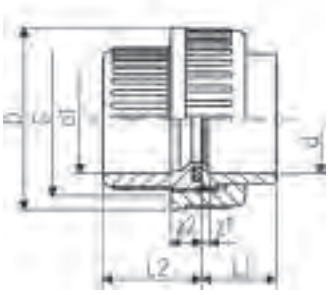

PN (bar)	d (mm)	d1 (inch)	Code	Weight (kg)	G (inch)	z1 (mm)	z2 (mm)	D (mm)	L1 (mm)	L2 (mm)
15	16	⅜	**721 513 105**	0.025	¾	3	8	35	17	24
15	20	½	**721 513 106**	0.040	1	3	9	43	19	26
15	25	¾	**721 513 107**	0.065	1 ¼	3	9	51	22	29
15	32	1	**721 513 108**	0.090	1 ½	3	9	58	25	33
15	40	1 ¼	**721 513 109**	0.155	2	3	10	72	29	39
15	50	1 ½	**721 513 110**	0.200	2 ¼	3	10	83	34	46
15	63	2	**721 513 111**	0.341	2 ¾	3	10	100	41	58



Union for solvent cement jointing PVC-U metric/ASTM

Model:

- Union End: Solvent cement socket ASTM
- Union Bush: Solvent socket metric
- Gasket: O-ring EPDM code no. 748 410 005-011
- Gasket: O-ring FPM code no. 749 410 005-011 (to be ordered separately)

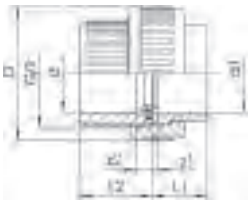

d (mm)	d1 (inch)	PN (bar)	Code	Weight (kg)	G (inch)	z1 (mm)	z2 (mm)	D (mm)	L1 (mm)	L2 (mm)
16	⅜	16	**721 514 105**	0.022	¾	3	10	35	22	24
20	½	16	**721 514 106**	0.042	1	3	10	43	25	26
25	¾	16	**721 514 107**	0.065	1 ¼	3	10	51	28	29
32	1	16	**721 514 108**	0.103	1 ½	3	10	58	32	33
40	1 ¼	16	**721 514 109**	0.174	2	3	12	72	35	39
50	1 ½	16	**721 514 110**	0.239	2 ¼	3	14	83	38	46
63	2	16	**721 514 111**	0.356	2 ¾	3	18	100	41	58



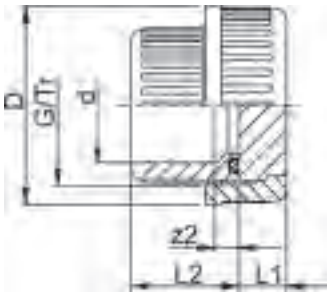

Union with union end blank PVC-U metric

Model:

- Union Bush: Solvent socket metric
- Jointing face: With O-ring groove

d (mm)	PN (bar)	EPDM Code	Weight (kg)	FPM Code	Weight (kg)	z2 (mm)	L2 (mm)	D (mm)	L1 (mm)	G/Tr (inch)
10	16	**721 510 003**	0.020	**721 510 028**	0.020	9	22	31	10	5/8
12	16	**721 510 004**	0.020	**721 510 029**	0.020	9	22	31	15	5/8
16	16	**721 510 005**	0.026	**721 510 030**	0.026	10	24	35	10	3/4
20	16	**721 510 006**	0.041	**721 510 031**	0.041	10	26	43	11	1
25	16	**721 510 007**	0.068	**721 510 032**	0.068	10	29	51	11	1 1/4
32	16	**721 510 008**	0.095	**721 510 033**	0.095	10	33	58	12	1 1/2
40	16	**721 510 009**	0.159	**721 510 034**	0.159	12	39	72	13	2
50	16	**721 510 010**	0.227	**721 510 035**	0.227	14	46	83	16	2 1/4
63	16	**721 510 011**	0.392	**721 510 036**	0.405	18	58	100	18	2 3/4
75	10	**721 510 012**	0.679	**721 510 037**	0.693	18	62	135	22	Tr108x5
90	10	**721 510 213**	1.022	**721 510 238**	1.022	18	69	158	24	Tr128x5
110	10	**721 510 014**	1.556	**721 510 039**	1.573	11	72	188	26	Tr154x6



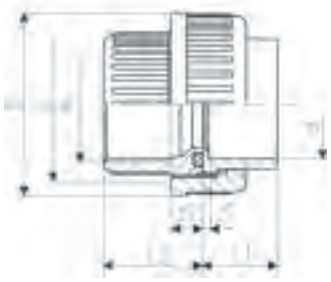

Adaptor union PVC-U metric Rp

Model:

- Union End: Solvent cement socket metric
- Union Bush: Parallel female thread Rp
- Gasket: O-ring EPDM code no. 748 410 004-011
- Gasket: O-ring FPM code no. 749 410 004-011 (to be ordered separately)
- Connection to plastic thread only
- Do not use thread sealing pastes that are harmful to PVC-U

d (mm)	Rp (inch)	PN (bar)	EPDM Code	Weight (kg)	G (inch)	z1 (mm)	z2 (mm)	D (mm)	L1 (mm)	L2 (mm)
12	¼	10	**721 510 204**	0.019	⅝	3	12	31	15	22
16	⅜	10	**721 510 205**	0.020	¾	3	13	35	17	24
20	½	10	**721 510 206**	0.040	1	3	13	43	19	26
25	¾	10	**721 510 207**	0.057	1 ¼	3	14	51	22	29
32	1	10	**721 510 208**	0.084	1 ½	3	15	58	25	33
40	1 ¼	10	**721 510 209**	0.147	2	3	19	72	29	39
50	1 ½	10	**721 510 210**	0.218	2 ¼	3	26	83	34	46
63	2	10	**721 510 211**	0.383	2 ¾	3	33	100	41	58







PRO-FIT adaptor union PVC-U metric Rp

Model:

- Union End: Solvent cemented spigot in combination with reducing socket metric
- Union Bush: Threaded socket with parallel female thread Rp
- Gasket: O-ring EPDM code no. 748 410 005-011
- Gasket: O-ring FPM code no. 749 410 005-011 (to be ordered separately)
- Connection to plastic thread only
- Do not use thread sealing pastes that are harmful to PVC-U

	d (mm)	d1 (mm)	Rp (inch)	PN (bar)	EPDM Code	Weight (kg)	G (inch)	z1 (mm)	z2 (mm)	z3 (mm)	D (mm)	L1 (mm)	L2 (mm)
*	16	12	⅜	10	**721 510 405**	0.032	¾	22	13	24	35	36	24
*	20	16	½	10	**721 510 406**	0.046	1	24	13	26	43	40	26
*	25	20	¾	10	**721 510 407**	0.079	1 ¼	25	14	28	51	44	29
*	32	25	1	10	**721 510 408**	0.116	1 ½	27	15	30	58	49	32
	40	32	1 ¼	10	**721 510 409**	0.192	2	31	19	35	74	57	38
	50	40	1 ½	10	**721 510 410**	0.263	2 ¼	35	26	40	83	66	45
	63	50	2	10	**721 510 411**	0.496	2 ¾	39	33	46	100	77	56



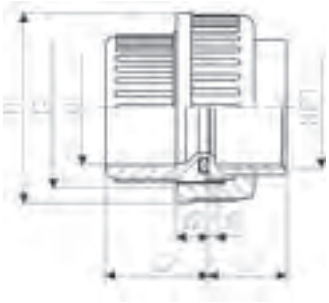

Adaptor union PVC-U metric NPT

Model:

- Union End: Taper female thread NPT (ASTM)
- Union Bush: Solvent socket metric
- Gasket: O-ring EPDM code no. 748 410 005-011
- Gasket: O-ring FPM code no. 749 410 005-011 (to be ordered separately)
- Connection to plastic thread only
- Do not use thread sealing pastes that are harmful to PVC-U

d (mm)	NPT (inch)	PN (bar)	EPDM Code	Weight (kg)	G (inch)	z1 (mm)	z2 (mm)	D (mm)	L1 (mm)	L2 (mm)
16	⅜	10	**721 514 205**	0.026	¾	4	10	35	17	24
20	½	10	**721 514 206**	0.042	1	2	10	43	19	26
25	¾	10	**721 514 207**	0.068	1 ¼	4	10	51	22	29
32	1	10	**721 514 208**	0.093	1 ½	4	10	58	25	33
40	1 ¼	10	**721 514 209**	0.150	2	6	12	72	29	39
50	1 ½	10	**721 514 210**	0.228	2 ¼	11	14	83	34	46
63	2	10	**721 514 211**	0.387	2 ¾	17	18	100	41	58



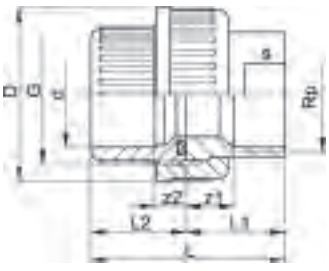

Adaptor union PVC-U/stainless steel metric Rp

Model:

- Union Nut: PVC-U
- Union Bush: Solvent cement socket PVC-U metric
- Union End: Stainless Steel 1.4404 (316L), parallel female thread Rp
- Gasket: O-ring EPDM code no. 748 410 005-011

Rp (inch)	d (mm)	PN (bar)	EPDM Code	Weight (kg)	FPM Code	Weight (kg)
⅜	16	16	**721 540 205**	0.053	**721 540 230**	0.053
½	20	16	**721 540 206**	0.096	**721 540 231**	0.096
¾	25	16	**721 540 207**	0.154	**721 540 232**	0.134
1	32	16	**721 540 208**	0.212	**721 540 233**	0.212
1 ¼	40	16	**721 540 209**	0.356	**721 540 234**	0.343
1 ½	50	16	**721 540 210**	0.455	**721 540 235**	0.455
2	63	16	**721 540 211**	0.730	**721 540 236**	0.721

table continued on the next page

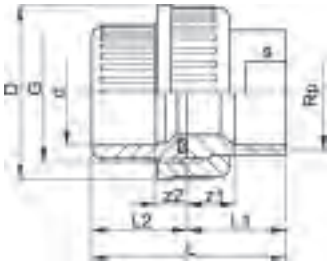

G (inch)	z1 (mm)	z2 (mm)	D (mm)	L (mm)	L1 (mm)	L2 (mm)	s (mm)
¾	9	10	35	43	19	24	19
1	11	10	43	50	24	26	24
1 ¼	11	10	51	55	26	29	29
1 ½	12	10	58	61	29	33	36
2	14	12	72	71	33	39	45
2 ¼	15	14	83	79	34	46	54
2 ¾	15	18	100	95	39	58	63



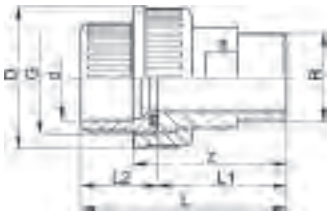

Adaptor union PVC-U/stainless steel metric R

Model:

- Union Nut: PVC-U
- Union Bush: Solvent cement socket PVC-U metric
- Union End: Stainless Steel 1.4404 (316L), taper male thread R
- Gasket: O-ring EPDM code no. 748 410 005-011

d (mm)	R (inch)	PN (bar)	EPDM Code	Weight (kg)	FPM Code	Weight (kg)
16	⅜	16	**721 540 705**	0.073	**721 540 730**	0.073
20	½	16	**721 540 706**	0.126	**721 540 731**	0.126
25	¾	16	**721 540 707**	0.174	**721 540 732**	0.170
32	1	16	**721 540 708**	0.262	**721 540 733**	0.262
40	1 ¼	16	**721 540 709**	0.476	**721 540 734**	0.472
50	1 ½	16	**721 540 710**	0.535	**721 540 735**	0.535
63	2	16	**721 540 711**	0.934	**721 540 736**	0.931

d (mm)	G (inch)	z (mm)	D (mm)	L (mm)	L1 (mm)	L2 (mm)	s (mm)
16	¾	40	35	54	30	24	19
20	1	44	43	60	34	26	24
25	1 ¼	46	51	65	36	29	32
32	1 ½	50	58	72	40	33	37
40	2	58	72	84	46	39	48
50	2 ¼	62	83	93	48	46	54
63	2 ¾	73	100	111	55	58	69



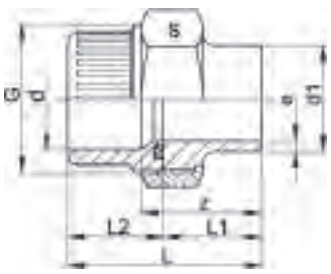

Adaptor union PVC-U/stainless steel metric
Welding end

Model:

- Union Bush: Solvent cement socket PVC-U metric
- Union End: Stainless Steel 1.4404 (316L) with welding end
- Union Nut: Stainless Steel WN 1.4404 (316L)
- Gasket: O-ring EPDM code no. 748 410 005-011

d (mm)	d1 (mm)	PN (bar)	EPDM Code	Weight (kg)	FPM Code	Weight (kg)
16	17	16	**721 545 505**	0.101	**721 545 530**	0.101
20	21	16	**721 545 506**	0.176	**721 545 531**	0.168
25	27	16	**721 545 507**	0.204	**721 545 532**	0.198
32	34	16	**721 545 508**	0.313	**721 545 533**	0.313
40	42	16	**721 545 509**	0.493	**721 545 534**	0.493
50	48	16	**721 545 510**	0.566	**721 545 535**	0.605
63	60	16	**721 545 511**	0.902	**721 545 536**	0.902

table continued on the next page

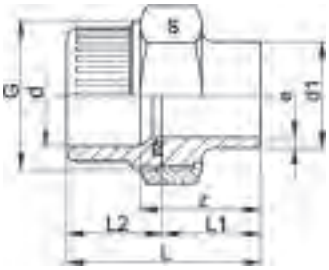

d (mm)	G (inch)	z (mm)	L (mm)	L1 (mm)	L2 (mm)	e (mm)	s (mm)
16	¾	28	42	18	24	1.6	32
20	1	32	48	22	26	2.0	41
25	1 ¼	33	52	23	29	2.0	46
32	1 ½	36	58	26	33	2.0	55
40	2	38	64	26	39	2.0	68
50	2 ¼	42	73	28	46	2.0	74
63	2 ¾	50	88	32	58	2.6	88



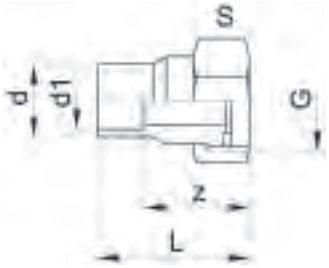

Tap connectors PVC-U/brass metric G

Model:

- Union End: PVC-U, solvent cement socket / spigot metric
- Union Nut: brass with female thread G
- Gasket: flat gasket EPDM code no. 748 400 030; 748 400 005-006

d (mm)	d1 (mm)	G (inch)	PN (bar)	Code	Weight (kg)	z (mm)	L (mm)	s (mm)
16	12	½	16	**721 550 305**	0.031	22	34	24
20	16	¾	16	**721 550 306**	0.049	24	38	30
25	20	1	16	**721 550 307**	0.079	27	43	38



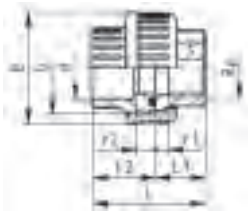

Adaptor union PVC-U/brass metric Rp

Model:

- Union Nut: PVC-U
- Union bush: Solvent cement socket metric
- Union End: Brass with parallel female thread Rp
- Gasket: O-ring EPDM code no. 748 410 006-014; d90 748 410 248

d (mm)	Rp (inch)	PN (bar)	Code	Weight (kg)	D (mm)	L (mm)	L1 (mm)	L2 (mm)	s (mm)	z1 (mm)	z2 (mm)	G (inch)
20	½	16	**721 550 506**	0.088	43	48	22	26	25	7	10	1
25	¾	16	**721 550 507**	0.145	51	54	25	29	30	9	10	1 1/4
32	1	16	**721 550 508**	0.175	58	60	27	33	36	8	11	1 1/2
40	1 ¼	16	**721 550 509**	0.322	72	70	31	39	46	10	13	2
50	1 ½	16	**721 550 510**	0.467	83	81	35	46	55	13	15	2 1/4
63	2	16	**721 550 511**	0.776	100	98	40	58	65	14	20	2 3/4
75	2 ½	10	**721 550 512**	1.360	127	109	47	62	85	16	18	Tr 108x5
90	3	10	**721 550 513**	2.003	150	121	52	69	95	18	18	Tr 128x5





Adaptor union PVC-U/brass metric R

Model:

- Union Nut: PVC-U
- Union Bush: Solvent cement socket PVC-U metric
- Union End: Brass with taper male thread R
- Gasket: O-ring EPDM code no. 748 410 006-014; d90 748 410 248

d (mm)	R (inch)	PN (bar)	Code	Weight (kg)	D (mm)	L (mm)	L1 (mm)	L2 (mm)	z (mm)	G (inch)	s (mm)
20	½	16	**721 550 906**	0.125	43	63	37	26	47	1	25
25	½	16	**721 550 957**	0.196	51	66	37	29	47	1 1/4	30
25	¾	16	**721 550 907**	0.196	51	71	42	29	52	1 1/4	30
25	1	16	**721 550 967**	0.307	51	75	46	29	56	1 1/4	30

table continued on the next page



d (mm)	R (inch)	PN (bar)	Code	Weight (kg)	D (mm)	L (mm)	L1 (mm)	L2 (mm)	z (mm)	G (inch)	s (mm)
32	½	16	**721 550 958**	0.297	58	70	37	33	48	1 1/2	36
32	¾	16	**721 550 968**	0.297	58	75	42	33	53	1 1/2	36
32	1	16	**721 550 908**	0.283	58	79	46	33	57	1 1/2	36
40	1 ¼	16	**721 550 909**	0.502	72	91	52	39	65	2	46
50	1 ½	16	**721 550 910**	0.681	83	102	56	46	71	2 1/4	55
63	2	16	**721 550 911**	1.101	100	125	67	58	87	2 3/4	65
75	2 ½	10	**721 550 912**	1.706	127	139	77	62	95	Tr 108x5	85
90	3	10	**721 550 913**	2.662	150	155	86	69	104	Tr 125x8	95



Adaptor union PVC-U/malleable iron galvanised metric Rp

Model:

- Union Nut: PVC-U
- Union Bush: Solvent cement socket PVC-U metric
- Union End: malleable iron with parallel female thread Rp
- Gasket: O-ring EPDM code no. 748 410 006-014; d90 748 410 248

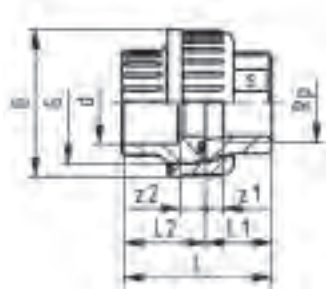

d (mm)	Rp (inch)	PN (bar)	Code	Weight (kg)	D (mm)	L (mm)	L1 (mm)	L2 (mm)	z1 (mm)	z2 (mm)	G (inch)	s (mm)
20	½	16	**721 530 306**	0.073	43	48	22	26	9	10	1	25
25	¾	16	**721 530 307**	0.107	51	51	22	29	7	10	1 1/4	31
32	1	16	**721 530 308**	0.154	58	58	26	33	9	10	1 1/2	38
40	1 ¼	16	**721 530 309**	0.282	72	69	31	39	12	12	2	48
50	1 ½	16	**721 530 310**	0.377	83	78	33	46	14	14	2 1/4	54
63	2	16	**721 530 311**	0.594	100	91	35	58	11	18	2 3/4	67
75	2 ½	10	**721 530 312**	1.008	127	101	39	62	12	18	Tr 108x5	85
90	3	10	**721 530 313**	1.350	150	114	45	69	15	19	Tr 128x5	96



Adaptor union PVC-U/malleable iron galvanised metric R

Model:

- Union Nut: PVC-U
- Union Bush: Solvent cement socket PVC-U metric
- Union End: Malleable iron with taper male thread R
- Gasket: O-ring EPDM code no. 748 410 006-014; d90 748 410 248

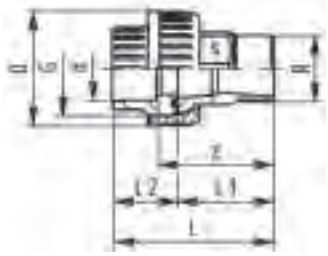

d (mm)	R (inch)	PN (bar)	Code	Weight (kg)	D (mm)	L (mm)	L1 (mm)	L2 (mm)	z (mm)	G (inch)	s (mm)
20	½	16	**721 530 806**	0.107	43	66	40	26	50	1	25
25	¾	16	**721 530 807**	0.159	51	72	43	29	53	1 1/4	31
32	1	16	**721 530 808**	0.213	58	80	48	33	58	1 1/2	38
40	1 ¼	16	**721 530 809**	0.426	72	95	57	39	69	2	48
50	1 ½	16	**721 530 810**	0.528	83	104	59	46	73	2 1/4	54
63	2	16	**721 530 811**	0.863	100	118	62	58	80	2 3/4	67
75	2 ½	10	**721 530 812**	1.441	127	137	75	62	93	Tr 108x5	85
90	3	10	**721 530 813**	1.873	150	149	80	69	99	Tr 128x5	96





Thread union PVC-U Rp Rp

Model:

- Union Nut: PVC-U
- Union Bush: Parallel female thread Rp
- Union End: Parallel female thread Rp
- Connection to plastic thread only
- Do not use thread sealing pastes that are harmful to PVC-U
- Gasket: O-ring EPDM code no. 748 410 004-011
- Gasket: O-ring FPM code no. 749 410 004-011 (to be ordered separately)

Rp (inch)	PN (bar)	Code	Weight (kg)	G (inch)	z1 (mm)	z2 (mm)	D (mm)	L1 (mm)	L2 (mm)
¼	10	**721 510 604**	0.019	⅝	3	12	31	22	15
⅜	10	**721 510 605**	0.027	¾	3	13	35	24	17
½	10	**721 510 606**	0.042	1	3	13	43	26	19
¾	10	**721 510 607**	0.065	1 ¼	3	14	51	29	22
1	10	**721 510 608**	0.093	1 ½	3	15	58	32	25
1 ¼	10	**721 510 609**	0.160	2	3	19	72	38	29
1 ½	10	**721 510 610**	0.220	2 ¼	3	26	83	45	34
2	10	**721 510 611**	0.415	2 ¾	3	33	100	56	41





Tank adaptor type 050 PVC-U
Compact metric

Model:

- End connection: solvent cement socket, metric
- Gasket: flat gasket EPDM
- Washer: PP
- Run-out holes: two holes in octagonal head
- FPM flat gasket available for tank adaptor type 050

d (mm)	PN (bar)	EPDM Code	Weight (kg)
16	16	**161 050 445**	0.048
20	16	**161 050 446**	0.066
25	16	**161 050 447**	0.170
32	16	**161 050 448**	0.144
40	16	**161 050 449**	0.238
50	16	**161 050 450**	0.260
63	16	**161 050 451**	0.398

d (mm)	L3 max (mm)	Diameter of bore in tank side (mm)	D1 (mm)	S (mm)	D (mm)	L2 (mm)	S1 (mm)	L4 (mm)	L1 (mm)	d2 (mm)	G (inch)
16	28	28	29	32	44	11	40	14	58	5	¾
20	28	35	35	40	54	12	50	16	61	5	1
25	28	43	42	50	60	13	55	19	65	5	1 ¼
32	28	49	49	56	69	13	65	22	67	5	1 ½
40	29	61	59	69	84	13	80	26	72	5	2
50	30	67	70	76	92	15	85	31	76	5	2 ¼
63	35	83	82	95	108	15	100	38	84	5	2 ¾



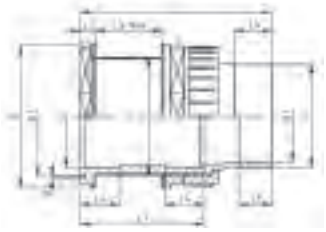

Tank adaptor type 050 PVC-U
Union with spigot/reducing socket metric

Model:

- Gaskets: flat gaskets EPDM
- Washer: PP
- Run-out holes: two holes in octagonal head
- FPM flat gaskets available for tank adaptor type 050

d (mm)	d1 (mm)	PN (bar)	EPDM Code	Weight (kg)
16	12	16	**161 050 345**	0.068
20	16	16	**161 050 346**	0.102
25	20	16	**161 050 347**	0.157
32	25	16	**161 050 348**	0.220
40	32	16	**161 050 349**	0.353
50	40	16	**161 050 350**	0.438
63	50	16	**161 050 351**	0.680

d (mm)	L (mm)	D (mm)	L1 (mm)	L5 (mm)	L4 (mm)	S1 (mm)	L2 (mm)	S (mm)	D1 (mm)	Diameter of bore in tank side (mm)	L3 max (mm)	G (inch)	d2 (mm)
16	96	44	58	12	14	40	11	32	29	28	19	¾	5
20	104	54	61	14	16	50	12	40	35	35	17	1	5
25	112	60	65	16	19	55	13	50	42	43	18	1 ¼	5
32	119	69	67	19	22	65	13	56	49	49	19	1 ½	5
40	132	84	72	22	26	80	13	69	59	61	16	2	5
50	145	92	76	26	31	85	15	76	70	67	16	2 ¼	5
63	163	108	84	31	38	100	15	95	82	83	19	2 ¾	5





Tank adaptor type 050 PVC-U
Union with solvent cement socket and O-Ring gasket metric

Model:

- Gaskets: O-ring EPDM, flat gasket EPDM
- Washer: PP
- Run-out holes: two holes in octagonal head
- For round tanks

d (mm)	PN (bar)	Code	Weight (kg)
16	16	**161 050 385**	0.040
20	16	**161 050 386**	0.070
25	16	**161 050 387**	0.160
32	16	**161 050 388**	0.200
40	16	**161 050 389**	0.240
50	16	**161 050 390**	0.400
63	16	**161 050 391**	0.530

d (mm)	G (inch)	d2 (mm)	D1 (mm)	S (mm)	L3 max (mm)	Diameter of bore in tank side (mm)	S1 (mm)	L4 (mm)	L (mm)	L2 (mm)	L1 (mm)	D (mm)
16	¾	5	29	32	19	28	40	14	77	11	58	44
20	1	5	35	40	17	35	50	16	83	12	61	54
25	1 ¼	5	42	50	18	43	55	19	90	13	65	60
32	1 ½	5	49	56	19	49	65	22	95	13	67	69
40	2	5	59	69	16	61	80	26	104	13	72	84
50	2 ¼	5	70	76	16	67	85	31	113	15	76	92
63	2 ¾	5	82	95	19	83	100	38	128	15	84	108



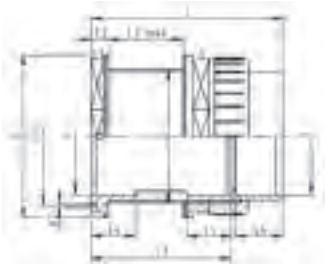

Tank adaptor type 050 PVC-U
Union with solvent cement socket metric

Model:

- Gaskets: flat gaskets EPDM
- Washer: PP
- Run-out holes: two holes in octagonal head
- FPM flat gaskets available for tank adaptor type 050

d (mm)	PN (bar)	Code	Weight (kg)
16	16	**161 050 245**	0.064
20	16	**161 050 246**	0.070
25	16	**161 050 247**	0.100
32	16	**161 050 248**	0.196
40	16	**161 050 249**	0.328
50	16	**161 050 250**	0.395
63	16	**161 050 251**	0.530

d (mm)	L (mm)	L2 (mm)	L1 (mm)	D (mm)	L3 max (mm)	Diameter of bore in tank side (mm)	S1 (mm)	L4 (mm)	d2 (mm)	D1 (mm)	S (mm)	G (inch)
16	77	11	58	44	19	28	40	14	5	29	32	¾
20	83	12	61	54	17	35	50	16	5	35	40	1
25	90	13	65	60	18	43	55	19	5	42	50	1 ¼
32	95	13	67	69	19	49	65	22	5	49	56	1 ½
40	104	13	72	84	16	61	80	26	5	59	69	2
50	113	15	76	92	16	67	85	31	5	70	76	2 ¼
63	128	15	84	108	19	83	100	38	5	82	95	2 ¾



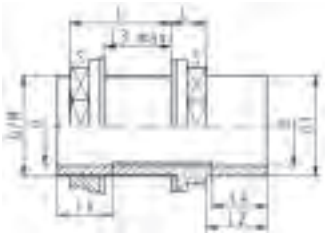

Tank adaptor adjustable PVC-U
Union with spigot/reducing socket metric

Model:

- Gasket: flat gasket EPDM
- Washer: PP
- Spare parts on request

d (mm)	d1 (mm)	Code	Weight (kg)	L3 max (mm)	Diameter of bore in tank side (mm)	G (inch)	L1 (mm)	L2 (mm)	L (mm)	L4 (mm)	s (mm)	M
20	25	**161 050 206**	0.046	23	28	¾	13	19	42	16	32	
25	32	**161 050 207**	0.066	23	35	1	15	22	45	19	40	
32	40	**161 050 208**	0.106	24	43	1 ¼	17	26	49	22	50	
40	50	**161 050 209**	0.190	21	55	1 ¾	19	31	48	26	60	
50	63	**161 050 210**	0.248	21	61	2	21	38	52	31	69	
63	75	**161 050 211**	0.352	23	77	2 ½	23	44	53	38	85	
75	90	**161 050 212**	0.539	20	89	3	26	51	56	44	100	
90	110	**161 050 213**	1.083	20	115		32	61	62	51	125	M113
110	125	**161 050 214**	1.350	22	135		36	69	66	61	147	M133





Backing nut PVC-U tank adaptor

Model:

- With G thread ISO 228/1
- Spare part for tank adaptor type 050

M	G (inch)	Code	Weight (kg)	D (mm)	L (mm)	s (mm)
	¾	**161 490 630**	0.007	39	13	32
	1	**161 490 632**	0.012	48	15	40
	1 ¼	**161 490 634**	0.019	58	17	50
	1 ½	**161 490 635**	0.027	65	18	56
	1 ¾	**161 490 636**	0.036	72	19	64
	2	**161 490 637**	0.043	79	21	69
	2 ¼	**161 490 638**	0.053	86	21	76
	2 ½	**161 490 639**	0.063	94	23	85
	2 ¾	**161 490 640**	0.092	106	25	95
	3	**161 490 641**	0.101	112	26	100
M113		**161 490 642**	0.100	139	32	126
M133		**161 490 643**	0.100	162	36	147
	4	**161 490 644**	0.164	139	32	126





Union end PVC-U metric

Model:

- Solvent cement socket metric
- Suitable for unions, tank connectors and diaphragm valves Type 514

* for unions 721 510 103-114, 721 510 128-139

	d (mm)	PN (bar)	Code	Weight (kg)	z (mm)	D (mm)	D1 (mm)	L (mm)
	10	16	**721 500 103**	0.004	3	20	18	15
	12	16	**721 500 104**	0.003	3	20	18	15
	16	16	**721 500 105**	0.003	3	24	22	17
	20	16	**721 500 106**	0.008	3	30	28	19
	25	16	**721 500 107**	0.014	3	39	36	22
	32	16	**721 500 108**	0.020	3	45	42	25
	40	16	**721 500 109**	0.037	3	57	53	29
	50	16	**721 500 110**	0.039	3	63	59	34
	63	16	**721 500 111**	0.072	3	78	74	41
	75	10	**721 500 162**	0.140	3	101	90	47
	90	10	**721 500 163**	0.242	5	121	108	56
	110	10	**721 500 164**	0.390	5	146	131	66
*	75	10	**721 600 112**	0.155	3	97	90	47
*	90	10	**721 600 113**	0.188	5	110	105	56







Union end with spigot PVC-U metric

Model:

- Solvent cement spigot in combination with reducing socket metric
- Suitable for unions, tank connectors and diaphragm valves Type 514

	d (mm)	d1 (mm)	PN (bar)	Code	Weight (kg)	z (mm)	z1 (mm)	D (mm)	D1 (mm)	L (mm)
*	16	12	16	**721 500 405**	0.010	22	24	24	22	36
*	20	16	16	**721 500 406**	0.009	24	26	30	28	40
*	25	20	16	**721 500 407**	0.026	25	28	39	36	44
*	32	25	16	**721 500 408**	0.035	27	30	45	42	49
	40	32	16	**721 500 409**	0.055	31	35	57	53	57
	50	40	16	**721 500 410**	0.085	35	40	63	59	66
	63	50	16	**721 500 411**	0.108	39	46	79	74	77





Union end PVC-U metric

Model:

- For tap connector code no. 721 550 305-307

d (mm)	d1 (mm)	PN (bar)	Code	Weight (kg)	z (mm)	D (mm)	L (mm)	L1 (mm)
16	12	16	**721 600 305**	0.005	22	19	34	3
20	16	16	**721 600 306**	0.009	24	24	38	5
25	20	16	**721 600 307**	0.016	27	30	43	5





Union end PVC-U Rp

Model:

- Parallel female thread Rp

Rp (inch)	PN (bar)	Code	Weight (kg)	z (mm)	D (mm)	D1 (mm)	L (mm)
¼	10	**721 600 654**	0.004	5	20	18	15
⅜	10	**721 600 655**	0.005	6	24	22	17
½	10	**721 600 656**	0.010	6	30	28	19
¾	10	**721 600 657**	0.015	7	39	36	22
1	10	**721 600 658**	0.019	8	45	42	25
1 ¼	10	**721 600 659**	0.038	10	57	53	29
1 ½	10	**721 600 660**	0.057	11	63	59	34
2	10	**721 600 661**	0.102	18	78	74	41





Union end blank PVC-U

Model:

- For unions, tank adaptor and diaphragm valve type 514
- Flat sealing faces

d (mm)	DN (mm)	Inch (inch)	PN (bar)	Code	Weight (kg)	D (mm)	D1 (mm)	L (mm)	L1 (mm)
10/12		1/8	16	**721 600 004**	0.006	20	18	9	4
16	10	3/8	16	**721 600 005**	0.004	24	22	10	5
20	15	1/2	16	**721 600 006**	0.009	30	28	11	5
25	20	3/4	16	**721 600 007**	0.017	39	36	11	6
32	25	1	16	**721 600 008**	0.025	45	42	12	6
40	32	1 1/4	16	**721 600 009**	0.042	57	53	13	7
50	40	1 1/2	16	**721 600 010**	0.061	63	59	16	7
63	50	2	16	**721 600 011**	0.108	78	74	18	8
75	65	2 1/2	10	**721 600 012**	0.216	101	90	22	10
90	80	3	10	**721 600 013**	0.333	121	108	24	11
110	100	4	10	**721 600 014**	0.530	146	131	26	12





Union nut PVC-U

* for Adaptor unions PVC-U / malleable iron only

	d (mm)	PN (bar)	Code	Weight (kg)	Tr	G (inch)	D (mm)	L (mm)
	10 - 12	16	**721 890 004**	0.009		⅝	19	19
	16	16	**721 890 005**	0.011		¾	22	21
	20	16	**721 890 006**	0.020		1	28	23
	25	16	**721 890 007**	0.020		1 ¼	36	24
	32	16	**721 890 008**	0.030		1 ½	41	26
	40	16	**721 890 009**	0.049		2	53	29
	50	16	**721 890 010**	0.087		2 ¼	59	34
	63	16	**721 890 011**	0.138		2 ¾	74	38
	75	10	**721 890 012**	0.256	Tr 108x5		92	40
	90	10	**721 890 013**	0.370	Tr 128x5		110	43
*	90	10	**721 890 023**	0.355	Tr 128x5		105	43
	110	10	**721 890 014**	0.574	Tr 154x6		133	48





Backing nut PVC-U tank adaptor

Model:

- With G thread ISO 228/1
- Spare part for tank adaptor type 050

M	G (inch)	Code	Weight (kg)	D (mm)	L (mm)	s (mm)
	¾	**161 490 630**	0.007	39	13	32
	1	**161 490 632**	0.012	48	15	40
	1 ¼	**161 490 634**	0.019	58	17	50
	1 ½	**161 490 635**	0.027	65	18	56
	1 ¾	**161 490 636**	0.036	72	19	64
	2	**161 490 637**	0.043	79	21	69
	2 ¼	**161 490 638**	0.053	86	21	76
	2 ½	**161 490 639**	0.063	94	23	85
	2 ¾	**161 490 640**	0.092	106	25	95

table continued on the next page

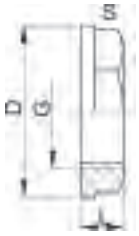

M	G (inch)	Code	Weight (kg)	D (mm)	L (mm)	s (mm)
	3	**161 490 641**	0.101	112	26	100
M113		**161 490 642**	0.100	139	32	126
M133		**161 490 643**	0.100	162	36	147
	4	**161 490 644**	0.164	139	32	126



ecoFIT union end

Model:

- Material: PE80
- With fusion socket metric
- Suitable for unions, tank connectors and diaphragm valves Type 514

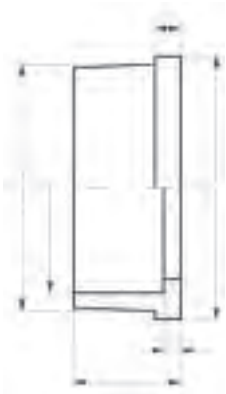

d (mm)	PN (bar)	Code	Weight (kg)	d1 (mm)	d2 (mm)	L (mm)	L1 (mm)	z (mm)
20	10	**734 600 106**	0.006	28	30	19	5	5
25	10	**734 600 107**	0.013	36	39	21	5	5
32	10	**734 600 108**	0.015	42	45	23	6	5
40	10	**734 600 109**	0.026	53	57	25	6	5
50	10	**734 600 110**	0.027	59	63	28	7	5
63	10	**734 600 111**	0.044	74	79	32	8	5



ecoFIT union end S5/SDR11

Model:

- Material: PE100
- IR = Infrared- (IR Plus) compatible.
- **For the dimensions d75-110 please see instructions for the installation**
- Conventional butt-welding according to DVS 2207



d (mm)	PN (bar)	FM	Code	Weight (kg)	D (mm)	L (mm)	L1 (mm)	e (mm)
20	16	IR	**753 508 606**	0.011	30	54	38	1.9
25	16	IR	**753 508 607**	0.018	39	57	42	2.3
32	16	IR	**753 508 608**	0.027	45	60	41	2.9
40	16	IR	**753 508 609**	0.044	57	63	42	3.7
50	16	IR	**753 508 610**	0.061	63	66	44	4.6
63	16	IR	**753 508 611**	0.100	78	69	45	5.8
75	10	IR	**753 608 612**	0.147	101	66	34	6.8
90	10	IR	**753 608 613**	0.156	101	66	55	8.2
110	10	IR	**753 608 614**	0.226	121	66	55	10.0





ecoFIT Union end long SDR11

Model:

- Material: PE100
- Suitable for unions, tank connectors and diaphragm valves Type 514
- For butt-, IR Plus® and electrofusion

d (mm)	PN (bar)	FM	Code	Weight (kg)	D (mm)	L (mm)	L1 (mm)	e (mm)
20	16	IR	**753 508 616**	0.006	30	67	52	1.9
25	16	IR	**753 508 617**	0.019	39	71	53	2.3
32	16	IR	**753 508 618**	0.027	45	73	55	2.9
40	16	IR	**753 508 619**	0.048	57	81	60	3.7
50	16	IR	**753 508 620**	0.069	63	87	66	4.6
63	16	IR	**753 508 621**	0.120	78	93	70	5.8





ecoFIT union end SDR17.6

Model:

- Material: PE100
- IR = Infrared- (IR Plus) compatible.
- **For the dimensions d75-110 please see instructions for the installation**
- Conventional butt-welding according to DVS 2207

d (mm)	PN (bar)	FM	Code	Weight (kg)	D (mm)	L (mm)	L1 (mm)	e (mm)
75	10	IR	**753 608 412**	0.124	101	66	34	4.3
90	10	IR	**753 608 413**	0.131	101	66	57	5.1
110	10	IR	**753 608 414**	0.178	121	66	55	6.3





Union end stainless steel Rp

Model:

- Material: stainless steel 1.4404 (316L)
- Parallel female thread Rp

Rp (inch)	PN (bar)	Code	Weight (kg)	z (mm)	D (mm)	D1 (mm)	L (mm)	s (mm)
⅜	16	**724 600 655**	0.030	9	24	22	19	19
½	16	**724 600 656**	0.060	11	30	28	24	24
¾	16	**724 600 657**	0.092	11	39	36	26	29
1	16	**724 600 658**	0.137	12	45	42	29	36
1 ¼	16	**724 600 659**	0.226	14	57	53	33	45
1 ½	16	**724 600 660**	0.314	15	63	59	34	54
2	16	**724 600 661**	0.438	15	78	74	39	63





Union end stainless steel R

Model:

- Material: stainless steel 1.4404 (316L)
- Taper male thread R

R (inch)	PN (bar)	Code	Weight (kg)	D (mm)	D1 (mm)	L (mm)	s (mm)
⅜	16	**724 600 705**	0.052	24	22	30	19
½	16	**724 600 706**	0.083	30	28	34	24
¾	16	**724 600 707**	0.125	39	36	36	32

table continued on the next page



R (inch)	PN (bar)	Code	Weight (kg)	D (mm)	D1 (mm)	L (mm)	s (mm)
1	16	**724 600 708**	0.189	45	42	40	37
1 ¼	16	**724 600 709**	0.356	57	53	46	48
1 ½	16	**724 600 710**	0.407	63	59	48	54
2	16	**724 600 711**	0.668	78	74	55	69





Union end stainless steel
Welding end

Model:

- Material: stainless steel 1.4404 (316L)

d1 (mm)	d (mm)	PN (bar)	Code	Weight (kg)	D (mm)	D1 (mm)	L (mm)	e (mm)
17	16	16	**724 605 505**	0.029	24	22	18	1.6
21	20	16	**724 605 506**	0.046	30	28	22	2.0
26	25	16	**724 605 507**	0.080	39	36	23	2.0
33	32	16	**724 605 508**	0.112	45	42	26	2.0
42	40	16	**724 605 509**	0.188	57	53	26	2.0
48	50	16	**724 605 510**	0.222	63	59	28	2.0
60	63	16	**724 605 511**	0.361	78	74	32	2.6





Union nut stainless steel 1.4404 (316L)

* Octagon union nut

	d (mm)	PN (bar)	Code	Weight (kg)	G (inch)	closest inch (inch)	L (mm)	s (mm)
	16	16	**724 690 105**	0.060	¾	⅜	19	32
	20	16	**724 690 106**	0.105	1	½	21	41
	25	16	**724 690 107**	0.091	1 ¼	¾	23	46
	32	16	**724 690 108**	0.170	1 ½	1	24	55
*	40	16	**724 690 109**	0.218	2	1 ¼	27	68
*	50	16	**724 690 110**	0.316	2 ¼	1 ½	31	74
*	63	16	**724 690 111**	0.364	2 ¾	2	35	88





Union bush PVC-U metric

Model:

- Solvent cement socket metric
- Jointing face: with O-ring groove
- Gasket: O-ring EPDM code no. 748 410 004-016; d90 748 410 248

d (mm)	PN (bar)	Code	Weight (kg)	z (mm)	D (mm)	L (mm)	G/Tr (inch)
10	16	**721 840 103**	0.002	10	20	22	5/8
12	16	**721 840 104**	0.007	10	20	22	5/8
16	16	**721 840 105**	0.009	10	24	24	3/4
20	16	**721 840 106**	0.014	10	29	26	1
25	16	**721 840 107**	0.020	10	34	29	1 1/4
32	16	**721 840 108**	0.032	10	42	33	1 1/2
40	16	**721 840 109**	0.057	12	52	39	2
50	16	**721 840 110**	0.073	14	62	46	2 1/4

table continued on the next page



d (mm)	PN (bar)	Code	Weight (kg)	z (mm)	D (mm)	L (mm)	G/Tr (inch)
63	16	**721 840 111**	0.137	18	78	58	2 3/4
75	10	**721 840 112**	0.210	18	93	62	Tr108x5
90	10	**721 840 123**	0.355	18	110	69	Tr128x5
110	10	**721 840 114**	0.445	11	133	72	Tr154x6





Union bush PVC-U Rp

Model:

- With parallel female thread Rp
- Jointing face: with O-ring groove
- Gasket: O-ring EPDM code no. 748 410 004-011
- Connection to plastic thread only
- Do not use thread sealing pastes that are harmful to PVC-U

Rp (inch)	PN (bar)	Code	Weight (kg)	G (inch)	z (mm)	D (mm)	L (mm)
¼	10	**721 840 604**	0.007	⅝	12	20	22
⅜	10	**721 840 605**	0.009	¾	13	24	24
½	10	**721 840 606**	0.013	1	13	29	26
¾	10	**721 840 607**	0.026	1 ¼	14	34	29
1	10	**721 840 608**	0.036	1 ½	15	42	32
1 ¼	10	**721 840 609**	0.063	2	19	53	38
1 ½	10	**721 840 610**	0.098	2 ¼	26	63	45
2	10	**721 840 611**	0.187	2 ¾	33	78	56





Union end brass Rp

Model:

- Union End: Brass with parallel female thread Rp

Rp (inch)	d (mm)	Code	Weight (kg)	L (mm)	s (mm)	D (mm)	D1 (mm)	z (mm)
½	20	**720 600 236**	0.059	22	25	30	28	5
¾	25	**720 600 237**	0.100	25	30	39	36	6
1	32	**720 600 238**	0.128	27	36	45	42	6
1 ¼	40	**720 600 239**	0.211	31	46	56	53	7
1 ½	50	**720 600 240**	0.324	35	55	62	59	7
2	63	**720 600 241**	0.510	40	65	78	74	8
2 ½	75	**720 600 242**	0.893	47	85	100	92	10
3	90	**720 600 243**	1.395	52	95	121	110	11





Union end brass R

Model:

- Union End: Brass with taper male thread R

d (mm)	R (inch)	Code	Weight (kg)	z (mm)	D1 (mm)	D (mm)	s (mm)	L (mm)
20	½	**720 600 246**	0.092	22	28	30	25	37
25	¾	**720 600 247**	0.151	25	36	39	30	42
25	½	**720 600 257**	0.142	27	36	39	30	42
32	1	**720 600 248**	0.216	28	42	45	36	46
32	½	**720 600 258**	0.113	31	42	45	36	46
32	¾	**720 600 268**	0.206	30	42	45	36	46

table continued on the next page



d (mm)	R (inch)	Code	Weight (kg)	z (mm)	D1 (mm)	D (mm)	s (mm)	L (mm)
40	1 ¼	**720 600 249**	0.408	32	53	56	46	52
50	1 ½	**720 600 250**	0.538	36	59	62	55	56
63	2	**720 600 251**	0.859	42	74	78	65	67
75	2 ½	**720 600 252**	1.446	49	92	100	85	77
90	3	**720 600 253**	2.063	54	110	121	95	86



Union nut, brass

- d12 - d20 for tap connector No. 21 55 03

PN (bar)	d (mm)	G (inch)	Code	Weight (kg)	L (mm)	s (mm)
16	16	½	**720 690 405**	0.024	16	24
16	16	¾	**720 690 005**	0.040	17	30
16	20	1	**720 690 006**	0.065	19	38
16	25	1 ¼	**720 690 007**	0.105	20	47
16	32	1 ½	**720 690 008**	0.102	22	52
16	40	2	**720 690 009**	0.199	25	66
16	50	2 ¼	**720 690 010**	0.268	25	72
16	63	2 ¾	**720 690 011**	0.280	27	87
16	75	3 ½	**720 690 012**	0.675	34	110





Union end malleable iron galvanized Rp

Model:

- Union End: malleable iron with parallel female thread Rp

d (mm)	Rp (inch)	PN (bar)	Code	Weight (kg)	D (mm)	L (mm)	s (mm)	z (mm)	D1 (mm)
20	½	16	**724 600 206**	0.037	30	22	25	9	27
25	¾	16	**724 600 207**	0.072	39	22	31	7	36
32	1	16	**724 600 208**	0.088	44	26	38	9	41
40	1 ¼	16	**724 600 209**	0.172	56	31	48	12	52
50	1 ½	16	**724 600 210**	0.210	62	33	54	14	58
63	2	16	**724 600 211**	0.324	78	35	67	11	73
75	2 ½	16	**724 600 212**	0.557	100	39	85	12	92
90	3	16	**724 600 213**	0.650	121	45	96	15	110





Union end malleable iron galvanized R

Model:

- Union End: Malleable iron with taper male thread R

R (inch)	d (mm)	Code	Weight (kg)	D (mm)	L (mm)	D1 (mm)	z (mm)	s (mm)
½	20	**724 600 806**	0.069	30	40	27	25	23
¾	25	**724 600 807**	0.115	39	43	36	27	30
1	32	**724 600 808**	0.161	44	48	41	29	36
1 ¼	40	**724 600 809**	0.294	56	57	52	36	48
1 ½	50	**724 600 810**	0.353	62	59	58	37	54
2	63	**724 600 811**	0.570	78	62	73	36	66
2 ½	75	**724 600 812**	0.980	100	75	92	45	85
3	90	**724 600 813**	1.217	121	80	110	47	95





Union bush malleable iron galvanized Rp

Model:

- Parallel female thread Rp

PN (bar)	Rp (inch)	d (mm)	Code	Weight (kg)	G (inch)	z (mm)	s (mm)	L (mm)
16	½	20	**724 630 606**	0.058	1	12	25	25
16	¾	25	**724 630 607**	0.100	1 ¼	13	31	28
16	1	32	**724 630 608**	0.127	1 ½	14	28	31
16	1 ¼	40	**724 630 609**	0.204	2	14	47	33
16	1 ½	50	**724 630 610**	0.268	2 ¼	17	53	36
16	2	63	**724 630 611**	0.443	2 ¾	18	66	42
16	2 ½	75	**724 630 612**	0.679	3 ½	19	82	46
16	3	90	**724 630 613**	0.913	4	22	96	52

Seals



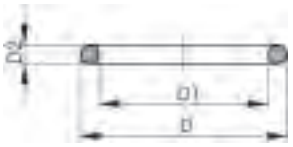

O-Ring gasket

Model:

- For unions and adaptor unions
- Hardness approx. 65° Shore
- EPDM minimum temperature -40°C
- FPM minimum temperature -15°C
- * for unions PVC-U, PVC-C and ABS: 21 51 01, 21 51 11, 21 53 03, 21 53 08, 21 55 04, 21 55 13, 21 55 18, 23 51 01 and 29 51 01 only

	d (mm)	DN (mm)	EPDM Code	Weight (kg)	FPM Code	Weight (kg)	D (mm)	D1 (mm)	D2 (mm)	closest inch (inch)
	10 - 12	8	**748 410 004**	0.002	**749 410 004**	0.020	18	12	3	¼
	16	10	**748 410 005**	0.004	**749 410 005**	0.002	21	16	3	⅜
	20	15	**748 410 006**	0.002	**749 410 006**	0.002	27	20	4	½
	25	20	**748 410 007**	0.002	**749 410 007**	0.002	35	28	4	¾
	32	25	**748 410 008**	0.003	**749 410 008**	0.002	40	33	4	1
	40	32	**748 410 009**	0.003	**749 410 009**	0.007	51	41	5	1 ¼
	50	40	**748 410 010**	0.004	**749 410 010**	0.060	58	47	5	1 ½
	63	50	**748 410 011**	0.005	**749 410 011**	0.003	70	60	5	2
	75	65	**748 410 014**	0.007	**749 410 014**	0.012	93	82	5	2 ½
	90	80	**748 410 015**	0.008	**749 410 015**	0.015	112	101	5	3
*	90	80	**748 410 248**	0.008	**749 410 248**	0.020	105	95	5	3
	110	100	**748 410 016**	0.016	**749 410 016**	0.031	134	120	7	4





Flat gasket

Model:

- Hardness approx. 65° Shore
- For adaptor unions

Size (inch)	EPDM Code	Weight (kg)	FPM Code	Weight (kg)	D (mm)	D1 (mm)	H (mm)
¼	**748 400 004**	0.002			20	13	2
⅜	**748 400 005**	0.002	**749 400 005**	0.020	24	17	2
½	**748 400 006**	0.002	**749 400 006**	0.003	30	21	3
¾	**748 400 007**	0.004	**749 400 007**	0.004	38	27	3
1	**748 400 008**	0.002	**749 400 008**	0.002	44	32	3
1 ¼	**748 400 009**	0.007	**749 400 009**	0.003	55	42	3
1 ½	**748 400 010**	0.004	**749 400 010**	0.007	62	46	3
2	**748 400 011**	0.005	**749 400 011**	0.006	78	60	3
2 ½	**748 400 012**	0.010	**749 400 012**	0.009	97	75	3
3	**748 400 013**	0.011	**749 400 013**	0.011	109	88	3



Flat gasket

Model:

- Hardness approx. 65° Shore
- For tap connectors No. 21 55 03

Attention:

- For tap connector d16 - 1/2": 748 400 030
- For tap connector d20 - 3/4": 748 400 005
- For tap connector d25 - 1": 748 400 006

d (mm)	EPDM Code	Weight (kg)	D (mm)	D1 (mm)	H (mm)
16	**748 400 030**	0.020	18	14	2
20	**748 400 005**	0.002	24	17	2
25	**748 400 006**	0.002	30	21	3



Flat Gasket inside the tank
For tank adaptor type 050

Model:

- Hardness approx. 65° Shore
- Dimension size "inch" correspond with the thread dimension "G" of the tank adaptor

Size (inch)	EPDM Code	Weight (kg)	FPM Code	Weight (kg)	D (mm)	D1 (mm)	H (mm)
¾	**748 400 007**	0.004	**749 400 007**	0.004	38	27	3
1	**748 400 042**	0.003	**749 400 042**	0.003	46	34	3
1 ¼	**748 400 009**	0.007	**749 400 009**	0.003	55	42	3
1 ½	**748 400 043**	0.005	**749 400 043**	0.009	62	48	3
2	**748 400 011**	0.005	**749 400 011**	0.006	78	60	3
2 ¼	**748 400 044**	0.008	**749 400 044**	0.009	85	75	3
2 ¾	**748 400 045**	0.011	**749 400 045**	0.011	106	82	3



Flat Gasket union
For tank adaptor type 050

Model:

- Hardness approx. 65° Shore
- Dimension size "inch" correspond with the thread dimension "G" of the tank adaptor

Size (inch)	EPDM Code	Weight (kg)	FPM Code	Weight (kg)	D (mm)	D1 (mm)	H (mm)
¾	**748 400 005**	0.002	**749 400 005**	0.020	24	17	2
1	**748 400 006**	0.002	**749 400 006**	0.003	30	21	3
1 ¼	**748 400 007**	0.004	**749 400 007**	0.004	38	27	3
1 ½	**748 400 008**	0.002	**749 400 008**	0.002	44	32	3
2	**748 400 009**	0.007	**749 400 009**	0.003	55	42	3
2 ¼	**748 400 010**	0.004	**749 400 010**	0.007	62	46	3
2 ¾	**748 400 011**	0.005	**749 400 011**	0.006	78	60	3





Washer PP for tank adaptor

Model:

- Spare part for tank adaptor type 050

d (mm)	Code	Weight (kg)	H (mm)	D1 (mm)	D (mm)
3/4	**727 490 005**	0.002	3	27	39
1	**727 490 006**	0.002	3	34	47
1 1/4	**727 490 007**	0.010	3	43	58
1 1/2	**727 490 108**	0.004	4	49	65
1 3/4	**727 490 008**	0.024	4	55	72
2	**727 490 009**	0.028	4	61	79
2 1/4	**727 490 010**	0.007	4	67	86
2 1/2	**727 490 011**	0.008	4	77	95
2 3/4	**727 490 111**	0.013	4	83	106
3	**727 490 012**	0.013	5	90	112
M113	**727 490 013**	0.021	5	115	139
M133	**727 490 014**	0.025	5	135	160

Flange adaptors and flanges





Flange adaptor PVC-U
Combined jointing face flat and serrated metric

Model:

- Solvent cement socket metric
- d63 - d400: combined jointing face flat and serrated
- Gasket: profile flange gasket EPDM code no. 748 440 705-725, FPM code no. 749 440 705-725 or flat gasket EPDM code no. 748 440 705-725, only use O-ring EPDM code no. 748 410 000-174, FPM code no. 749 410 000-174 in combination with conterpart flange adaptor code no. 721 810 105-123
- Flange: PVC-U code no. 721 700 005-140, PP with steel ring code no. 727 700 206-225, backing flange PP-V for socket systems metric code no. 727 700 406-425

Note:

* bevel on pipe may be needed if used with butterfly valve type 037/038/039
The flat gasket affects the maximum allowable operating pressure!

	DN (mm)	d (inch)	d (mm)	PN (bar)	Code	Weight (kg)	D1 (mm)	z (mm)	L (mm)	D (mm)	L1 (mm)
	10		16	16	**721 800 105**	0.006	29	3	17	22	6
	15		20	16	**721 800 106**	0.009	34	3	19	27	6
	20		25	16	**721 800 107**	0.015	41	3	22	33	7
	25		32	16	**721 800 108**	0.024	50	3	25	41	7
	32		40	16	**721 800 109**	0.039	61	3	29	50	8
	40		50	16	**721 800 110**	0.056	73	3	34	61	8
	50		63	16	**721 790 111**	0.103	90	3	41	77	9
	65	2 ½	75	16	**721 790 112**	0.159	106	3	47	91	10
	80		90	16	**721 790 113**	0.253	125	5	56	108	11
	100		110	16	**721 790 114**	0.417	150	5	66	131	12
	100		125	16	**721 790 115**	0.533	170	5	74	148	13
	125	5	140	16	**721 790 116**	0.725	188	5	81	165	14
	150		160	16	**721 790 117**	1.093	213	5	91	188	16
*	200		200	10	**721 790 119**	1.460	250	6	112	224	24
	200		225	10	**721 790 120**	1.743	274	6	125	248	25
*	250		250	10	**721 790 121**	2.203	303	9	140	274	23
	250		280	10	**721 790 122**	2.930	329	5	151	308	23
*	300		315	6	**721 790 123**	4.455	379	8	172	346	27
	350		355	6	**721 790 124**	5.963	430	10	194	384	32
	400		400	6	**721 790 125**	9.041	482	10	216	438	34





Flange adaptor PVC-U
Jointing face with O-ring groove metric

Model:

- Solvent cement socket metric
- Counterpart: flange adaptor flat code no. 721 800 105-721 790 111-125, combined flange adaptor (d160, d200, d225, d280, d315)
- Gasket: O-ring EPDM code no. 748 410 000-176, FPM code no. 749 410 000-176
- Flange: PVC-U code no. 721 700 005-138, PP/steel code no. 727 700 206-223, PP-V for socket systems metric code no. 727 700 406-423

d (inch)	d (mm)	DN (mm)	PN (bar)	Code	Weight (kg)	D1 (mm)	z (mm)	D (mm)	L (mm)	L1 (mm)
	16	10	16	**721 810 105**	0.008	29	6	22	20	9
	20	15	16	**721 810 106**	0.011	34	6	27	22	9
	25	20	16	**721 810 107**	0.018	41	6	33	25	10
	32	25	16	**721 810 108**	0.027	50	6	41	28	10
	40	32	16	**721 810 109**	0.046	61	8	50	34	13
	50	40	16	**721 810 110**	0.068	73	8	61	39	13
	63	50	16	**721 810 111**	0.120	90	8	77	46	14
2 ½	75	65	16	**721 810 112**	0.183	106	8	91	52	15
	90	80	16	**721 810 113**	0.286	125	10	108	61	16
	110	100	16	**721 810 114**	0.478	150	11	131	72	18
	125	100	16	**721 810 115**	0.607	170	11	148	80	19
5	140	125	16	**721 810 116**	0.804	188	11	165	87	20
	160	150	16	**721 810 117**	1.226	213	11	188	97	22
	200	200	10	**721 810 119**	1.593	250	12	224	118	30
	225	200	10	**721 810 120**	1.878	274	12	248	131	31
	250	250	10	**721 810 121**	2.175	303	9	274	140	23
	280	250	10	**721 810 122**	3.170	329	13	308	158	30
	315	300	6	**721 810 123**	4.891	379	17	346	180	35





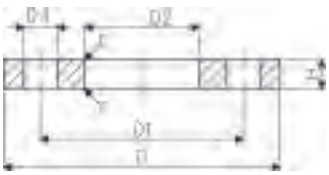

Backing flange PVC-U metric

Model:

- For socket systems metric and BS
- Connecting dimension: ISO 7005, EN 1092, BS 4504, DIN 2501
- **Bolt circle PN 10**
- Maximum medium- or ambient temperature 45 °C

[1]) Connecting dimension: ISO 2536, bolt circle acc. DN125, suitable for flange adaptor d125/ DN100
[2]) Connecting dimension: ISO 2536, bolt circle acc. DN225, suitable for flange adaptor d250/ DN250
[3]) Not for BS
AL: number of holes

d (mm)	Size (inch)	DN (mm)	PN (bar)	Code	Weight (kg)
16	⅜	10	10	**721 700 005**	0.053
20	½	15	10	**721 700 006**	0.067
25	¾	20	10	**721 700 007**	0.092
32	1	25	10	**721 700 008**	0.133
40	1 ¼	32	10	**721 700 009**	0.198
50	1 ½	40	10	**721 700 010**	0.247
63	2	50	10	**721 700 011**	0.312
75	2 ½	65	10	**721 700 012**	0.376
90	3	80	10	**721 700 013**	0.464
110	4	100	10	**721 700 014**	0.543
125	4 ½	125	10	**721 700 015**	0.904
140	5	125	10	**721 700 016**	0.758
160	6	150	10	**721 700 017**	1.009
200	7	200	10	**721 700 019**	1.669
225	8	200	10	**721 700 020**	1.377
250	9	250	6	**721 700 021**	2.376

table continued on the next page

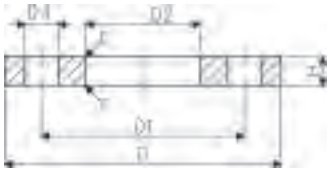

	d (mm)	Size (inch)	DN (mm)	PN (bar)	Code	Weight (kg)
2	250	9	225	6	**721 700 136**	1.800
	280	10	250	6	**721 700 137**	1.746
	315	12	300	6	**721 700 138**	2.349
	355	14	350	6	**721 700 139**	3.485
	400	16	400	6	**721 700 140**	4.526

	d (mm)	D (mm)	D1 (mm)	D2 (mm)	D3 (mm)	H (mm)	r (mm)	AL	SC
	16	90	60	23	14	10	1	4	M12
	20	95	65	28	14	11	1	4	M12
	25	105	75	34	14	12	2	4	M12
	32	115	85	42	14	14	2	4	M12
	40	140	100	51	18	15	2	4	M16
	50	150	110	62	18	16	2	4	M16
	63	165	125	78	18	18	3	4	M16
	75	185	145	92	18	19	3	4	M16
	90	200	160	110	18	20	3	8	M16
3	110	220	180	133	18	22	3	8	M16
1	125	250	210	150	18	26	5	8	M16
	140	250	210	167	18	26	4	8	M16
	160	285	240	190	22	28	4	8	M20
	200	340	295	226	22	32	4	8	M20
	225	340	295	250	22	32	4	8	M20
	250	395	350	277	22	36	4	12	M20
2	250	370	325	277	22	36	4	8	M20
	280	395	350	310	22	36	4	12	M20
	315	445	400	348	22	36	4	12	M20
	355	505	460	388	22	38	5	16	M20
	400	565	515	442	26	42	5	16	M24





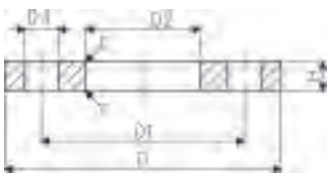

Backing flange PVC-U Inch ANSI

Model:

- For socket systems metric and BS
- Connecting dimension: ANSI/ASME B 16.5 class 150, ASTM D 4024, BS 1560, BS EN 1759
- **Bolt circle class 150**

* Only for use with metric flange adaptors
AL: number of holes

	Size (inch)	d (mm)	DN (mm)	PN (bar)	Code	Weight (kg)	D (mm)	D1 (mm)	D2 (mm)	D3 (mm)	H (mm)	r (mm)	AL
	½		15	10	**721 702 206**	0.068	95	60	28	16	11	1	4
	¾		20	10	**721 702 207**	0.090	105	70	34	16	12	2	4
	1		25	10	**721 702 208**	0.128	115	79	42	16	14	2	4
	1 ¼		32	10	**721 702 209**	0.203	140	89	51	16	15	2	4
	1 ½		40	10	**721 702 210**	0.238	150	98	62	16	16	2	4
	2		50	10	**721 702 211**	0.302	165	121	78	19	18	3	4
	2 ½		65	10	**721 702 212**	0.369	185	140	92	19	19	3	4
	3		80	10	**721 702 213**	0.509	200	152	110	19	20	3	4
	4		100	10	**721 702 214**	0.516	220	190	138	19	22	3	8
*	4	110	100	10	**161 483 180**	0.538	220	190	133	19	22	3	8
	5		125	10	**721 702 216**	0.737	250	216	167	22	26	4	8
	6		150	10	**721 702 217**	1.910	285	241	200	22	28	4	8
	8		200	10	**721 702 220**	1.360	340	298	250	22	32	4	8





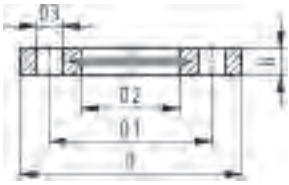

Backing flange PP-V metric
For socket systems metric and BS

Model:

- Connecting dimension: ISO 7005, EN 1092, BS 4504, DIN 2501
- **Bolt circle PN 10**
- Full-plastic flange PP-GF (30 % glass-fibre reinforced)

[1]) Suitable for socket- and butt fusion systems
[2]) Not for BS
* Combined version, metric-ANSI
AL: number of holes

	d (mm)	DN (mm)	PN (bar)	Code	Weight (kg)	D (mm)	D1 (mm)	D2 (mm)	D3 (mm)	H (mm)	AL	SC
1	20	15	16	**727 700 406**	0.093	95	65	28	14	16	4	M12
1	25	20	16	**727 700 407**	0.120	105	75	34	14	17	4	M12
1	32	25	16	**727 700 408**	0.151	115	85	42	14	18	4	M12
1	40	32	16	**727 700 409**	0.244	140	100	51	18	20	4	M16
1	50	40	16	**727 700 410**	0.297	150	110	62	18	22	4	M16
1	63	50	16	**727 700 411**	0.362	165	125	78	18	24	4	M16
1	75	65	16	**727 700 412**	0.487	185	145	92	18	26	4	M16
	90	80	16	**727 700 413**	0.550	200	160	110	18	27	8	M16
2	110	100	16	**727 700 414**	0.640	220	180	133	18	28	8	M16
	140	125	16	**727 700 416**	0.781	250	210	167	18	30	8	M16
	160	150	16	**727 700 417**	1.050	285	241	190	22	32	8	M20
*	200	200	16	**727 700 419**	1.629	340	297	226	22	34	8	M20
*	225	200	16	**727 700 420**	1.400	340	297	250	22	34	8	M20
	250	250	16	**727 700 421**	2.229	395	350	277	22	38	12	M20
	280	250	16	**727 700 422**	1.651	395	350	310	22	38	12	M20
	315	300	16	**727 700 423**	2.461	445	400	348	22	42	12	M20
	355	350	10	**727 700 424**	3.000	515	460	388	22	46	16	M20
	400	400	10	**727 700 425**	5.135	574	515	442	26	50	16	M24





Fixed flange PVC-U
Jointing face flat metric

Model:

- **Bolt circle PN 10**
- Solvent cement socket metric
- Connecting dimension: ISO 7005 PN 10, EN 1092 PN 10, DIN 2501 PN 10, BS 4504 PN 10

* Combined Flange, connecting dimensions EN1092 PN 10 and ANSI B 16.5 Class 150

	d (mm)	DN (mm)	Size (inch)	PN (bar)	Code	Weight (kg)
	20	15	½	16	**721 730 206**	0.098
	25	20	¾	16	**721 730 207**	0.130
	32	25	1	16	**721 730 208**	0.183
	40	32	1 ¼	16	**721 730 209**	0.305
	50	40	1 ½	16	**721 730 210**	0.365
	63	50	2	16	**721 730 211**	0.510
*	75	65	2 ½	10	**721 730 212**	0.520
*	90	80	3	10	**721 730 213**	0.720
*	110	100	4	10	**721 730 214**	0.920
*	140	125	5	10	**721 730 216**	1.380
*	160	150	6	10	**721 730 217**	2.039

	d (mm)	D (mm)	D1 (mm)	D2 (mm)	D3 (mm)	z (mm)	H (mm)	H1 (mm)	AL	SC
	20	95	65	27	14	3	12	19	4	M12
	25	105	75	33	14	3	13	22	4	M12
	32	115	85	41	14	3	14	25	4	M12
	40	140	100	51	18	3	17	29	4	M16
	50	150	110	62	18	3	17	34	4	M16

table continued on the next page



	d (mm)	D (mm)	D1 (mm)	D2 (mm)	D3 (mm)	z (mm)	H (mm)	H1 (mm)	AL	SC
	63	165	125	77	18	3	20	41	4	M16
*	75	185	142	91	22	3	21	47	4	M20
*	90	200	156	108	22	5	22	56	8	M20
*	110	220	186	131	24	5	24	66	8	M20
*	140	250	215	165	23	5	28	91	8	M20
*	160	285	240	188	23	5	30	91	8	M20



Fixed flange PVC-U
Combined jointing face: flat and serrated metric

Model:

- Solvent cement socket metric
- Connecting dimension: ISO 7005 PN 10, EN 1092 PN 10, DIN 2501 PN 10, BS 4504 PN 10
- **Bolt circle PN 10**

* Combined Flange, connecting dimensions EN1092 PN 10 and ANSI B 16.5 Class 150
d75 - d110: bolt hole as long hole version
AL: number of holes



	d (mm)	DN (mm)	d (inch)	PN (bar)	Code	Weight (kg)
	20	15		16	**721 740 106**	0.100
	25	20		16	**721 740 107**	0.130
	32	25		16	**721 740 108**	0.185
	40	32		16	**721 740 109**	0.306
	50	40		16	**721 740 110**	0.368
	63	50		16	**721 740 111**	0.513
*	75	65	2 ½	10	**721 740 112**	0.536
*	90	80	3	10	**721 740 113**	0.710
*	110	100	4	10	**721 740 114**	0.941
*	140	125	5	10	**721 740 116**	1.395
*	160	150	6	10	**721 740 117**	2.029

	d (mm)	D (mm)	D1 (mm)	D1 max. (mm)	D1 min. (mm)	D2 (mm)	D3 (mm)	z (mm)	H (mm)	H1 (mm)	AL	SC
	20	95	65			27	14	3	12	19	4	M12
	25	105	75			33	14	3	13	22	4	M12
	32	115	85			41	14	3	14	25	4	M12
	40	140	100			51	18	3	17	29	4	M16
	50	150	110			62	18	3	17	34	4	M16
	63	165	125			77	18	3	20	41	4	M16
*	75	185		140	144	91	19	3	21	47	4	M16
*	90	200		153	159	108	19	5	22	56	8	M16
*	110	220		181	191	131	24	5	24	66	8	M20
*	140	250	215			165	23	5	28	91	8	M20
*	160	285	240			188	23	5	30	91	8	M20





Blanking flange PVC-U
Jointing face serrated metric

Model:

- Connecting dimension: ISO 7005 PN10, EN 1092 PN10, DIN 2501 PN10
- **d63 to d160: combined jointing face (serrated and flat)**
- d250: connecting dimension: ISO 2536
- **Bolt circle PN 10**

* Combined Flange, connecting dimensions EN1092 PN 10 and ANSI B 16.5 Class 150
d20 - d110: bolt hole as long hole version
AL: number of holes

	Inch (inch)	DN (mm)	PN (bar)	d (mm)	Code	Weight (kg)
*	1/2	15	10	20	**721 700 506**	0.075
*	3/4	20	10	25	**721 700 507**	0.097
*	1	25	10	32	**721 700 508**	0.145
*	1 1/4	32	10	40	**721 700 509**	0.214
*	11/2	40	10	50	**721 700 510**	0.298
*	2	50	10	63	**721 700 511**	0.352
*	2 1/2	65	10	75	**721 700 512**	0.538
*	3	80	10	90	**721 700 513**	0.679
*	4	100	10	110	**721 700 514**	0.870
*	5	125	10	140	**721 700 516**	1.286
*	6	150	10	160	**721 700 517**	1.761
	8	200	10	225	**721 700 520**	2.731
	10	250	10	250	**721 700 521**	3.329
	10	250	10	280	**721 700 522**	3.769
	12	300	6	315	**721 700 523**	4.856
	14	350	6	355	**721 700 524**	6.972
	16	400	6	400	**721 700 525**	9.125

	D (mm)	D1 (mm)	D1 min. (mm)	D1 max. (mm)	D2 (mm)	D3 (mm)	D4 (mm)	H (mm)	H1 (mm)	AL
*	95		61	63	34	16	15	15	12	4
*	105		70	73	41	16	20	16	13	4
*	115		79	83	50	16	25	19	15	4
*	140		91	100	61	18	34	20	16	4
*	150		101	110	74	18	44	22	17	4
*	165		121	124	91	19	57	25	20	4
*	185		140	145	106	22	69	29	21	4
*	200		152	160	125	22	82	32	22	8
*	220		180	191	150	24	102	36	24	8
*	250	215			184	23	120	41	28	8
*	285	240			212	23	152	45	30	8
	340	295			261	22	213	63	36	8
	370	325			292	22	238	63	36	8
	395	350			320	22	266	65	36	12
	445	400			371	22	299	65	36	12
	505	460			430	22	341	67	38	16
	565	515			482	26	384	71	42	16

Branch and tapping saddles





Branch saddle

- Outlet with solvent cement socket metric
- Top saddle with rubber seal
- For operating pressure up to 10 bar water
- Seal: NBR (Nitrile-Rubber) shore hardness: 60 ±5 Shore A

d (mm)	Code	Weight (kg)	d1 (mm)	d2 (mm)	L (mm)
63	**161 111 035**	0.697	40	22	105
63	**161 111 036**	0.733	50	22	105
75	**161 111 046**	0.778	50	31	105
90	**161 111 055**	0.829	40	31	105
90	**161 111 056**	0.867	50	31	105
110	**161 111 065**	0.935	40	31	105
110	**161 111 066**	0.970	50	40	105
110	**161 111 067**	1.003	63	40	105
160	**161 111 095**	1.252	40	31	120
160	**161 111 096**	1.281	50	40	120
160	**161 111 097**	1.488	63	40	120
225	**161 111 116**	1.587	50	40	120
225	**161 111 117**	1.756	63	40	120





Repair saddle

- For repair of damaged pipes
- Saddle halves can be solvent cemented
- Cementing only possible on dry mains without pressure
- For operating pressure up to 10 bar water

d (mm)	Code	Weight (kg)	Max. pipe aperture (mm)	L (mm)
63	**161 110 230**	0.663	39	105
90	**161 110 250**	0.761	48	105
110	**161 110 260**	0.900	48	105
160	**161 110 290**	1.369	60	120
225	**161 110 310**	1.490	60	120



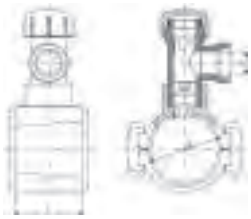

Tapping saddle with integral cutter

- For PVC pipes to tapping under operating pressure
- For operating pressure up to 10 bar water
- Top saddle with rubber seal
- Seal: NBR (Nitrile-Rubber) shore hardness: 60 ±5 Shore A
- Threaded outlet for PVP connections, 21.50.69
- Outlet 90° to main pipe
- Hexagon KEY for tapping: 799 150 007 (16 - 25 mm) 799 150 008 (32 - 40 mm) 799 150 009 (50 - 63 mm)

d (mm)	Code	Weight (kg)	d1 (mm)	Connection	Tapping-Ø (mm)	L (mm)
63	**161 114 409**	1.228	32	1	21	105
63	**161 114 410**	1.090	40	11/4	21	105
75	**161 114 415**	1.150	32	1	30	105
75	**161 114 416**	1.180	40	11/4	30	105
90	**161 114 422**	1.198	32	1	30	105
90	**161 114 423**	1.220	40	11/4	30	105
110	**161 114 430**	1.486	32	1	30	105
110	**161 114 431**	1.494	40	11/4	30	105
110	**161 114 432**	1.427	50	11/2	39	105
110	**161 114 433**	1.473	63	2	39	105
160	**161 114 454**	1.398	32	1	30	120
160	**161 114 455**	1.427	40	11/4	30	120
160	**161 114 456**	1.998	50	11/2	39	120
160	**161 114 457**	2.351	63	2	39	120
225	**161 114 470**	2.023	32	1	30	120
225	**161 114 471**	2.024	40	11/4	30	120
225	**161 114 472**	1.963	50	11/2	39	120
225	**161 114 473**	2.503	63	2	39	120

Saddles





Saddle single branch (rubber gasket joint to main)

Model:

- Outlet with solvent cement socket, BS Inch
- Top saddle with NBR rubber gasket

d1-d (mm)	PN (bar)	Code	Weight (kg)	L (mm)
1 1/4 - 3"	10	**161 117 055**	0.343	106
1 1/2 - 3"	10	**161 117 056**	0.363	106
2 - 3"	10	**161 117 057**	0.767	106
1 1/4 - 4"	10	**161 117 065**		106
1 1/2 - 4"	10	**161 117 066**	0.405	106
2 - 4"	10	**161 117 067**	0.930	106
1 1/4 - 6"	10	**161 117 095**	0.550	120
1 1/2 - 6"	10	**161 117 096**		120
2 - 6"	10	**161 117 097**	1.364	120





Saddle double branch (rubber gasket joint to main)

Model:

- Top saddle with NBR rubber gasket
- Outlet with solvent cement socket, BS Inch
- Allowance should be made for a possible weakening effect on the main of the two diametrically opposed tappings. Particular attention should therefore be given to the class of pipe used in relation to the expected maximum working pressures.

d-d (inch)	PN (bar)	Code	Weight (kg)	L (mm)	L1 (mm)
1 ¼ - 3	10	**161 137 055**	0.800	106	88
1 ½ - 3	10	**161 137 056**	0.840	106	88
2 - 3	10	**161 137 057**	0.851	106	88
1 ¼ - 4	10	**161 137 065**	0.910	106	101
1 ½ - 4	10	**161 137 066**	0.930	106	101
2 - 4	10	**161 137 067**	0.954	106	101
1 ¼ - 6	10	**161 137 095**	1.250	120	121
1 ½ - 6	10	**161 137 096**		120	121
2 - 6	10	**161 137 097**	1.332	120	121

Installation fittings



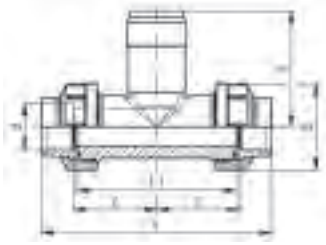

Installation fitting type 310 PVC-U
For socket systems metric

Range of use:

- Compatible Signet flow sensors: type 2551, 2537, 515, 8510, 2536, 8512
- Compatible Signet pH/ORP sensors: type 2724, 2725, 2726, 2734, 2736, 2735

Attention:

- sensor length depends on installation fitting

Model:

- Threaded outlet 1 ¼" NPSM
- Union end with solvent cement socket PVC-U

d (mm)	DN (mm)	PN (bar)	EPDM Code	Weight (kg)	FPM Code	Weight (kg)
20	15	16	**721 310 006**	0.181	**721 310 036**	0.181
25	20	16	**721 310 007**	0.226	**721 310 037**	0.226
32	25	16	**721 310 008**	0.303	**721 310 038**	0.304
40	32	16	**721 310 009**	0.419	**721 310 039**	0.479
50	40	16	**721 310 010**	0.568	**721 310 040**	0.571
63	50	16	**721 310 011**	0.879	**721 310 041**	0.881

d (mm)	DN (mm)	L1 (mm)	D (mm)	H (mm)	L (mm)	Sensor Type	z (mm)
20	15	90	43	76	128	flow X0, pH XX	48
25	20	100	51	78	144	flow X0, pH XX	53
32	25	110	58	81	160	flow X0, pH XX	58
40	32	110	72	85	168	flow X0, pH XX	58
50	40	120	83	89	188	flow X0, pH XX	63
63	50	130	100	95	212	flow X0, pH XX	68



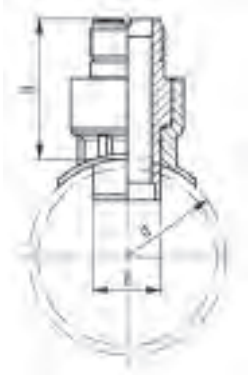

Installation fitting type 312
PVC-U metric glue on saddle

Model:

- Top saddle for solvent cement bonding
- Saddle with threaded outlet 1 ¼" NPSM

Range of use:

- Compatible Signet flow sensors: type 2551, 2537, 515, 8510, 2536, 8512

Attention:

- sensor length depends on installation fitting

PN (bar)	DN (mm)	d (mm)	Code	Weight (kg)	D (mm)	Sensor Type	H (mm)
10	65	75	**721 312 012**	0.220	38	flow X1	89
10	80	90	**721 312 013**	0.228	38	flow X1	89
10	100	110	**721 312 014**	0.225	38	flow X1	89
10	100	125	**721 312 015**	0.218	38	flow X1	81
10	125	140	**721 312 016**	0.213	38	flow X1	79
10	150	160	**721 312 017**	0.217	38	flow X1	76
10	200	200	**721 312 019**	0.192	38	flow X1	69
10	200	225	**721 312 020**	0.297	38	flow X2	141
10	250	250	**721 312 021**	0.295	38	flow X2	137
10	300	315	**721 312 023**	0.290	38	flow X2	127



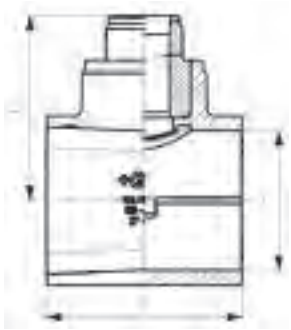

Installation fitting type 312
PVC-U metric clamp on saddle

Model:

- Saddle with threaded outlet 1 ¼" NPSM
- Top saddle for solvent cement bonding
- Seal: Lip seal EPDM

Range of use:

- Compatible Signet flow sensors: type 2551, 2537, 515, 8510, 2536, 8512
- Compatible Signet pH/ORP sensors: type 2724, 2725, 2726, 2734, 2736, 2735

Attention:

- sensor length depends on installation fitting

DN (mm)	PN	d (mm)	Code	Weight (kg)	Sensor Type	H (mm)	L (mm)
65	16	75	**198 150 538**	0.780	flow X0, pH XX	99	105
80	16	90	**198 150 539**	0.835	flow X0, pH XX	105	105
100	16	110	**198 150 540**	0.885	flow X0, pH XX	114	105
150	16	160	**198 150 543**	1.375	flow X1	157	120
200	16	225	**198 150 545**	1.700	flow X1	184	120





Installation fitting type 314
PVC-U metric

Model:

- Threaded outlet 1 ¼" NPSM
- For conventional hot gas back welding according to DVS 2207 part 3

Attention:

- only for pressureless or low pressure application
- pressure rate depends on quality of hot gas back welding
- please consult the instruction manual
- Installation by trained and certified welders only
- sensor length depends on installation fitting

Range of use:

- Compatible Signet flow sensors: type 2551, 2537, 515, 8510, 2536, 8512
- Compatible Signet pH/ORP sensors: type 2724, 2725, 2726, 2734, 2736, 2735

DN	d (mm)	PN* (bar)	Code	Weight (kg)	Sensor Type	D (mm)	L (mm)
65 - 150	75 - 180	-	**721 314 000**	0.053	flow X0, pH XX	38	68
200 - 350	200 - 355	-	**721 314 001**	0.078	flow X1	38	102
350 - 600	400 - 630	-	**721 314 002**	0.153	flow X2	38	178

GF Piping Systems

+GF+

Automation made easy for you

Accurate measurement
Precise control
Reliable actuation



Automation made easy

Our automation loop consists of three elements: measurement, control and actuation. Measurement encompasses a wide range of measurement technologies and parameters. Most of these products are available in plastic and are offered with dedi ated fittings, which integ ate our sensors perfectly into your piping system. Control comprises various control functionalities (from simple relays to PID controllers) and all major communication technologies. Actuation includes pneumatic, electric and magnetic actuators, which can be seamlessly combined with all kinds of valves and accessories.

The all-in-one solution for your automation needs

Easy-to-combine
Flexible combination and upgrade

Easy-to-install
Seamless integration

Easy-to-connect
State-of-the-art communication technology

Easy-to-set-up
Plug-and-play design

Easy-to-operate
Intuitive menu structure

Easy-to-maintain
Wide range of accessories

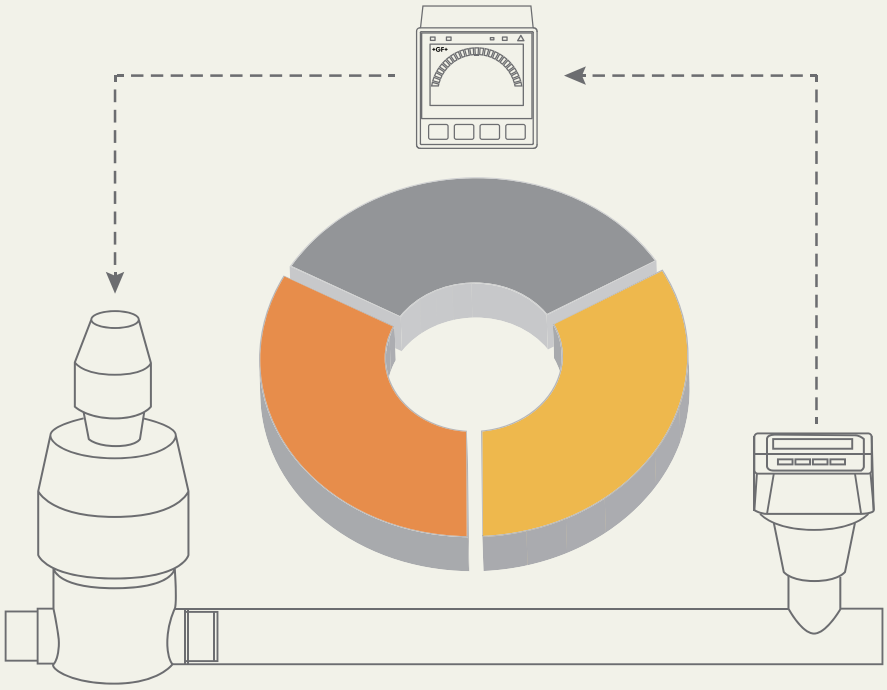

S: Sensor **P: Positioner** **A: Actuator** **V: Valve** **P+F: Pipe & Fittings**

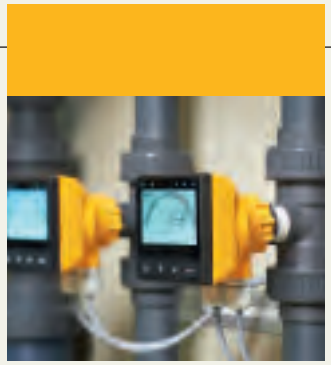

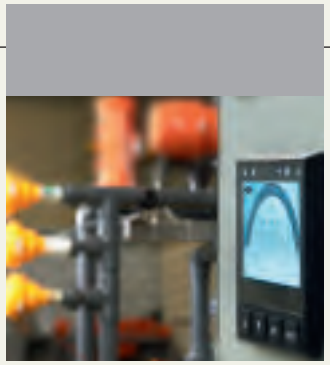

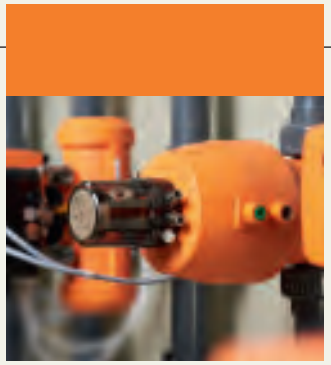



Measurement

Accurate measurement is the basis for reliable process control



Our measurement offering will cover your needs: flow, pH, conductivity, level, temperature and various water quality parameters. Corresponding to our piping systems, most sensors are available in plastic and are therefore highly resistant to chemicals. Our plug-and-play measurement products are self-explanatory, easy to maintain and are offered with suitable installation fittings.

Measurement products

An overview of the key products

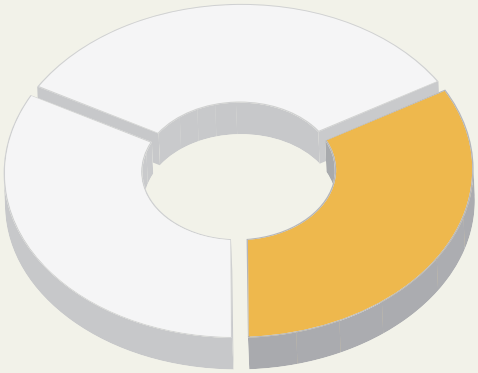

Flow Sensors and Instruments



Rotor-X Paddlewheel Flow Sensor type 515

- Non-powered
- 0.3 - 6 m/s (1 to 20 ft/s)
- DN15 - DN900 (½ to 36 in.)
- PP 12.5 bar @ 20 °C (180 psi @ 68 °F)
- PVDF 14 bar @ 20 °C (203 psi @ 68 °F)
- 19.7 Hz per m/s nominal (6 Hz per ft/s nominal)



Rotor-X Paddlewheel Flow type 2536

- Powered
- 0.1 - 6 m/s (0.3 to 20 ft/s)
- DN15-DN900 (½ to 36 in.)
- PP 12.5 bar @ 20 °C (180 psi @ 68 °F)
- PVDF 14 bar @ 20 °C (203 psi @ 68 °F)
- 49 Hz per m/s nominal (15 Hz per ft/s nominal)



Paddlewheel Flow Sensor type 2537

- 0.1 - 6 m/s (0.3 to 20 ft/s)
- DN15 - DN200 (½ to 8 in.)
- PP 12.5 bar @ 20 °C (181 psi @ 68 °F)
- PVDF 14 bar @ 20 °C (203 psi @ 68 °F)
- 4-20 mA, digital (S^3L), fl w switch or pulse outputs (based on part number)



Stainless Steel Paddlewheel Flow Sensor - type 2540

- 0.1 - 6 m/s (0.3 to 20 ft/s)
- DN40-DN900 (1½ to 36 in.)
- 316 Stainless Steel
- 17 bar @ 100 °C (250 psi @ 212 °F)
- 49 Hz per m/s nominal (15 Hz per ft/s nominal)
- Open Collector output



Magmeter (blind or display) type 2551

- 0.05 - 10 m/s (0.15 to 33 ft/s)
- DN15-DN900 (½ to 36 in.)
- 10.3 bar @ 25 °C (150 psi @ 77 °F)
- 4-20 mA, or frequency/ digital (S^3L) outputs
- Optional relay outputs



Metal Magmeter type 2552

- 0.05 - 10 m/s (0.15 to 33 ft/s)
- DN50 - DN2550 (2 to 102 in.)
- 316 Stainless Steel & PVDF
- 20.7 bar @ 25 °C (300 psi @ 77 °F)
- 4-20 mA, frequency/ digital (S^3L)
- Hot-tap using ball or gate valves



Turbine Flow Sensor type 2100

- 0.38 to 38 lpm (0.10 to 10 gpm)
- DN15 (½ in.)
- PVDF
- 16 bar @ 20 °C (232 psi @ 68 °F)
- Open Collector output
- Use with End Fitting: 3-2100-31 to 3-2100-38



Micro-Flow Rotor Sensor type 2000

- 0.11 - 12.11 lpm (0.03-3.2 gpm)
- ¼ in. NPT or ISO 7/1-R1/4 threads
- Polyphenylene Sulphide and PEEK
- 5.5 bar @ 0 ° to 80 °C (80 psi @ 32 °F to 176 °F)
- Open Collector output
- Standard cable 7.6 m (25 ft)



Mini-Flow Rotor Sensor type 2507

- 400 - 12 000 mL/m (0.1 to 3.2 U.S. gpm)
- G ¼ in. ports, ¼ in. NPT pipe adapters
- PVDF
- 5.5 bar @ 24 °C (80 psi @ 75 °F)
- Open Collector output
- Standard cable 7.6 m (25 ft)



Metalex Paddlewheel Flow Sensor type 525

- 0.5 - 6 m/s (1.6-20 ft/s)
- DN15 - DN300 (½-12 in.)
- 316 Stainless Steel
- 103 bar (1500 psi @ safety factor 1.5) @149 °C (300 °F)
- 39 Hz per m/s nominal (12 Hz per ft/s nominal)

Easy to install

Flow sensors and instruments



SmartPro Transmitter
type 9900

- Multi-Parameter input selection
- Large auto-sensing backlit display
- "Dial-type" digital bar graph
- Optional field upg adable relays
- Selectable error mode for current outputs, 3.6 mA or 22 mA
- Optional Relay, Direct Conductivity / Resistivity, 4 to 20 mA Output, and HART modules are available



Flow Integral Mount
type 9900

- Local display for sensor mounted instruments
- Provides 4-20 mA output
- "At a glance" visibility
- "Dial-type" digital bar graph
- NEMA 4X/IP65



ProPoint Sensor-Powered
Flow Monitor - type 5090

- Displays GPM
- No power required
- Single input
- Panel mount
- Analogue dial for indication
- Use with 515 fl w sensor



Battery Powered Flow Totaliser
type 8150

- Displays GPS, GPM, GPH, GPD, LPS, LPM, LPH, LPD
- Battery powered
- Single input
- Panel or field moun
- 3 totalisers, auto calibration
- Use with 515 or 525 fl w sensors



Variable Area Flow Meters
type 335 / 350, SK50-73

- Taper tubes in PVC transparent, PA, PSU, PVDF
- Union connection with PVC (std)
- DN10 - DN65 (⅜" - 3 ½")
- PN10
- Optional switch feedback
- Special scales on request



Flow Wet-Tap Valve
type 3519

- DN15 - DN900 (½ to 36 in.)
- PVC
- 7 bar @ 20 °C (100 psi max @ 68 °F)
- Use with Wet-Tap Paddlewheel Flow Sensors Type 515 and 2536



Portaflow Portable Ultrasonic
Flowmeter - type 330 / 220

- 0.1 m/s - 20 m/s
- d13-d2000
- Battery powered, AC 110-240 V
- Output: 0/4 to 20 mA, RS 232, USB, pulse
- Data logger (Type 330)
- Transit time measurement



Ultraflow wall Mount Ultrasonic
Flowmeter - type 3000 / 4000

- 0.1 m/s - 20 m/s
- d13 - d2000
- DC 24 V or AC 86-240 V
- Output 0/4 to 20mA, RS 232, USB, pulse
- Data logger (Type 4000)
- Transit time measurement



Ultrasonic Flowmeter
type U1000

- 0.1 m/s-10 m/s
- d25-d115
- DC 12 - 24 V
- Output: 4-20 mA, pulse or frequency
- Transit time measurement



pH/ORP sensors and instruments



SmartPro Transmitter type 9900

- Multi-Parameter input selection
- Large auto-sensing backlit display
- "Dial-type" digital bar graph
- Optional field upg adable relays
- Selectable error mode for current outputs, 3.6 mA or 22 mA
- Optional Relay, Direct Conductivity / Resistivity, HART modules 4 to 20 mA-Output Module are available



Threaded DryLoc pH/ORP Electrode - type 2774-2777

- 0 - 14 pH, ±2,000 mV ORP
- Ryton body, PTFE junction
- Use sensor ¾"threads for mounting
- DryLoc preamplifier connection with gold plated pins
- Suitable for submersible applications
- For use with 2750/2760 preamplifie s



Differential DryLoc pH / ORP Electrodes type 2764-2767

- 0 - 14 pH, ±2,000 mV ORP
- Ryton body, PTFE junction
- Use sensor 1 inch threads for mounting
- DryLoc preamplifier connection with gold plated pins
- For use with 2750 / 2760 preamplifie s



DryLoc pH and ORP Electrodes for Harsh Applications - type 2734 – 2736

- Enhanced reference and bridge gels to resist chemical poisoning
- Ryton (PPS) body and PTFE junction for broad range of chemical compatibility
- PTFE reference junction resists fouling and chemical attack
- Mounts in Signet standard fittings from DN15 to DN100 (½ to 4 in.)



DryLoc pH and ORP Electrodes type 2724-2726

- 0-14 pH, ±2,000 mV ORP
- Ryton body, PE junction
- Use fittings for in-line appli ations or ¾" NPT or ISO
- Suitable for submersible applications
- DryLoc preamplifier connection with gold plated pins



pH/ORP Wet-Tap Assembly - type 3719 / 2756, Wet-Tap Electrodes type 2757

- Use a wet-tap style sensor; for 0 - 14 pH, ±2,000 mV ORP
- CPVC, PVC
- 1½ or larger
- 1½ or 2 NPT, ISO 7 / 1-R1.5 or R2
- Electrode removal without process shutdown



DryLoc pH/ORP SensorElectronics type 2750

- 0 - 14 pH, ±2,000 mV ORP
- PBT, CPVC (PVC-C)
- DryLoc connection with gold plated pins
- 4 - 20 mA or digital (S^3L)
- Use with 8900, 9900 or PLC
- In-line and submersible versions available

Conductivity/resistivity sensors and instruments



Dual-Channel Conductivity Controller - type 8860

- Displays µS, mS, KΩ, MΩ, PPM
- AC or DC supply
- Up to 2 sensor inputs
- Up to 2 Open Collector outputs and 4 relay outputs
- Up to 3 active current outputs
- % reject, % recovery, and ratio functions



SmartPro Transmitter type 9900

- Multi-Parameter input selection
- Lac auto-sensing backlit display
- "Dial-type" digital bar graph
- Optional field upg adable relays
- Selectable error mode for current outputs, 3.6 mA or 22 mA
- Optional Relay, Direct Conductivity / Resistivity, 4 to 20 mA Output, and HART modules are available



Conductivity Integral System with 9900 Transmitter

- Local display for sensor mounted instruments
- Provides 4 - 20 mA output
- "At a glance" visibility
- "Dial-type" digital bar graph
- NEMA 4X/IP65



Conductivity Sensor Electronics with PVDF type 2850

- 0.055 - 400 000 µS (0.02 - 200 000 ppm) (18.2 MΩ - 1 KΩ)
- PBT (integral mount) /PBT/CPVC (universal J-box)
- Integral systems connect to the 2839 series electrodes or 2819 series electrode via 3-286X Universal J-box assembly
- 4 - 20 mA or digital (S^3L)
- Factory NIST Certifie



Conductivity/Resistivity Electrodes type 2818 - 2823

- 0.055 - 400 000 µS (0.02-200 000 ppm) (18.2 MΩ - 1 KΩ)
- 316 SS or Titanium (Hastelloy-C also available upon request)
- Reversible threads or sanitary flange connections
- Connect to 2850 sensor electronics



PVDF Conductivity Electrodes type 2839 - 1V(D) - 2842 - 1V(D)

- 0.055-200 000 µS (0.02-100 000 ppm) (18.2 MΩ - 1 KΩ)
- 316 SS and PVDF
- Dual threaded NPT or ISO
- Connection to 9900 - 1, 8900 instruments or 2850 sensor electronics
- NIST Certifi ate

Dual-Channel ProcessPro's -3 are still available

Temperature sensors and instruments



SmartPro Transmitter type 9900

- Multi-Parameter input selection
- Large auto-sensing backlit display
- "Dial-type" digital bar graph
- Optional field upg adable relays
- Selectable error mode for current outputs, 3.6 mA or 22 mA
- Optional Relay, Direct Conductivity/ Resistivity and HART modules are available



Temperature Integral System with 9900 Transmitter

- Local display for sensor mounted instruments
- Provides 4-20 mA output
- "At a glance" visibility
- "Dial-type" digital bar graph
- NEMA 4X/IP65



Temperature Sensor type 2350

- In-line mounting: 10 °C to 100 °C (14°-212 °F)
- Submersible mounting: 10 °C to 85 °C (14 °-185 °F)
- PVDF
- ¾ inch dual threaded for in-line or submersible installation
- 4-20 mA or digital (S^3L)

Temperature, pressure and level sensors and instruments



Pressure Integral System with 9900 Transmitter

- Utilizes the 2450 sensor for pressure or hydrostatic level measurement
- Local display for sensor mounted instruments
- Provides 4 - 20 mA output
- "At a glance" visibility
- "Dial-type" digital bar graph
- NEMA 4X / IP65



Pressure Sensor type 2450

- 0 - 0.7 bar (0 - 10 psig) - U
- 0 - 3.4 bar (0 - 50 psig) - L
- 0 - 17 bar (0 - 250 psig) - H
- Vacuum range available
- Wetted material: PVDF, ceramic and FPM
- ½" union, dual threaded
- 4 - 20 mA or digital (S^3L)



Ultrasonic Integral Level Transmitter type 2260

- Non-contact principle
- Narrow 5 and 6° beam
- Range: 4, 6, 15 meters (13, 20, 50 ft)
- 4 - 20 mA, HART, relay ouput
- PP and PVDF bodies
- ATEX versions
- Quick-set and advanced menu
- Large multi-parameter display
- Allows for open channel measurement



Ultrasonic Level Sensor type 2270

- Non-contact principle
- Narrow 5 and 6° beam
- Range: 4, 6, meters (13, 20, ft)
- 4 - 20 mA, HART
- PP and PVDF bodies
- Easy to use EView programming software
- Allows for open channel measurement



Point level Switches

- Body materials for water, water based liquids and concentrated chemicals
- Versions for industrial- and municipal water treatment
- Digital transistor- and relay outputs
- ATEX versions
- WHG versions
- Versions without moving parts



Hydrostatic Level Sensor type 2250

- 0 - 10 psi = 0 - 7.03 m = 0 - 23.06 ft
- 0 - 50 psi = 0 - 35.15 m = 0 - 115.32 ft
- Wetted Material: PVDF, PVC, ceramic and FPM
- Submersible sensor
- 4 - 20 mA or digital (S^3L)
- Uses hydrostatic pressure for level and depth control

Water analysis



Chlorine Analyzer System type 4630

- Continuous free chlorine measurement without chemical reagents
- Optional pH sensor for increased accuracy
- Pre-wired panel for easy installation
- Built in pressure regulator and variable area fl w meter



Turbidimeter type 4150

- Compliant with U.S. EPA 180.1 or ISO7027
- Two adjustable alarm relays
- Built-in pressure regulator
- Easy access for wiring and maintenance
- Optional auto cleaning for reduced maintenance



Process Optical Dissolved Oxygen Sensor - type 2610

- Optical DO measurement with no fl w requirements
- No membranes or fi ling solutions
- Flexible communications 4 to 20 mA or Modbus 3 - 2610-31 (S^3L), 4 to 20 mA or Modbus 3-2610 - 41
- Measurement Range: 0 - 20 mg/L, 0 - 200% Saturation



Chlorine Dioxide System type 4632

- Complete turnkey system – no additional parts required to install
- Now available with a fl w switch interrupt (Chlorine and Chlorine dioxide)
- Complies with EPA standard 334.0
- Chemical free measuring system – 0 - 2 ppm
- Optional pH measurement





Easy to operate

Accessories



Switching Power Supplies type 7310

- Universal AC input/Full Range
- Protections: Short circuit/Overload/ Over-voltage
- Cooling by free air convection
- Install on DIN rail TS-35/7.5 or 15
- Built in DC OK active signal
- LED indicator for power on



8059 External Relay Module

- AC and DC powered versions
- External relays controlled by host instrument
- Digital pass-through (DC versions) to simplify wiring
- Relay can be tested locally, and also via the host instrument
- Only compatible with 8900



pH/ORP System Tester type 2759

- Battery powered
- Simulates pH and ORP
- Compatible with 2750 and 2760 preamp
- Connects to any pH/ORP instrument



Conductivity/Resistivity Tools type 2850-101-X

- Available in 5 different alues
- Verifies electronic independent of electrode
- Compatible with all conductivity and resistivity instruments
- Temperature compensated to 25 °C



i-GO Signal Converter type 8058

- Connects third party 4-20 mA signals to the 8900 and 9900
- Available for single or dual 4-20 mA sensor inputs
- Requires special programming for use with the 8350, 8450
- Compatible with 8900, 9900



HART – USB Modem

- HART to USB converter
- Portable or DIN rail version
- ATEX



Configuration/Diagnostic Tool type 0250 USB to Digital (S^3L)

- User friendly interface
- Configure a l modifiable pa ameters in the sensor
- Monitor/graph sensor data or log sen-sor data to a fil
- Monitor mV readings in pH/ORP sensors to monitor drift



PC COMM Configuration Tool type 0251

- User friendly interface
- Configure settings such as instrument type, units and modify labels
- Back up and restore 9900 Transmitter configu ations to a computer
- Use a single file to clone mu tiple 9900 Transmitters





Buffer Solutions type pH/ORP

- NIST Traceable
- Easily identifiable colour coded buffe solutions
- Liquid or powder versions
- Temperature compensated values
- Kits for easy use



Formazin Stock Kit for Turbidimeter type 4150

- Turbidity standard for most any value
- Three different g aduated pipettes included
- Four glass cuvettes with light shield caps
- Easy to follow instructions



Calibration Kits for Turbidimeter type 4150

- Stable pre-mixed standards that are certified a curate
- Sealed calibration cuvettes
- Shelf-life 12 months
- Easy to follow instructions
- Kits for easy use

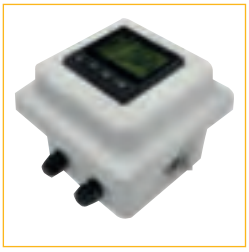

Wall Mount Accessory Kit

- Compact enclosure that works with 9900 Transmitter and other ¼ DIN size instruments
- Equiped with a ¼ DIN cutout and two ½" holes at the base
- Mounting hardware and liquid tight connectors are included



4 - 20 mA Sensor GK 15 for VAFM type 335/350

- 12 - 24 V DC
- IP 65
- 4 - 20 mA (3 wire)

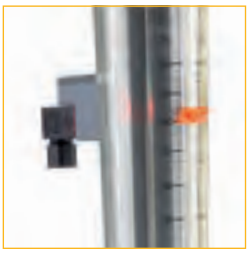

Limit contacts GK 10 / GK11 for type 335 / 350 and short version

- Reed contact
- IP65
- 230 V

Control

Precise control throughout your automation loop



Clever design makes life easy. All our measurement parameters can be connected with one and the same transmitter, a true multi-parameter controller. Additional functionalities like batch control or communication technologies can be added anytime because of the modular design. Our control products are simple to operate, have intuitive menu structures and can be upgraded modularly.

Control products

An overview of the key products

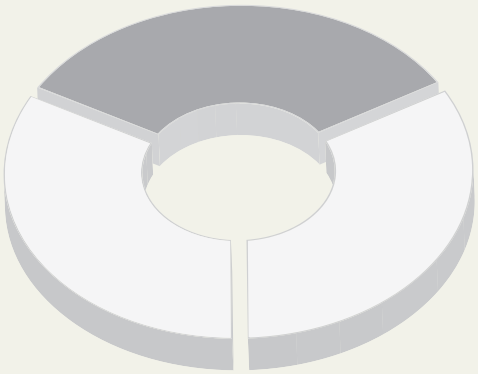

Multi-parameter instruments



SmartPro Transmitter type 9900

- Multi-Parameter input selection
- Large auto-sensing backlit display
- „Dial-type" digital bar graph
- Optional field upg adable relays
- Selectable error mode for current outputs, 3.6 mA or 22 mA
- Optional Relay, Direct Conductivity / Resistivity, 4 to 20 mA Output, and HART modules are available



Multi-Parameter/ Multi-Channel Controller - type 8900

- AC or DC power option
- Up to 6 sensor inputs (2 frequency inputs max)
- Up to 4 4 - 20mA outputs
- Up to 8 relays
- Use with all digital (S^3L) sensors

Flow instruments



SmartPro Batch Controller type 9900-1BC

- "Dial-type" digital bar graph
- Remote control wiring with start, stop and resume terminals for remote batch control
- 3 programmable relays
- 10 batch memory
- Compatible with fl w sensors
- Two-stage control to prevent overfi ling
- Simple and advanced programing modes

Accessories



i-GO Signal Converter type 8058

- Connects third party 4 - 20 mA signals to the 8900 and 9900
- Available for single or dual 4 - 20 mA sensor inputs
- Compatible with 8900, 9900
- Requires programming at the factory with the 8350, 8450

Actuation

Reliable actuation with configuration flexibility



With our modular set-up, valves and actuators can be combined flexibly and additional functionalities, like positioners or monitoring devices, can be added optionally. Naturally, we offer the whole range in all-plastic designs, which are capable of withstanding harsh environments. A wide range of pressure regulating valves and accessories complete our actuation portfolio.

Actuation products

An overview of the key products

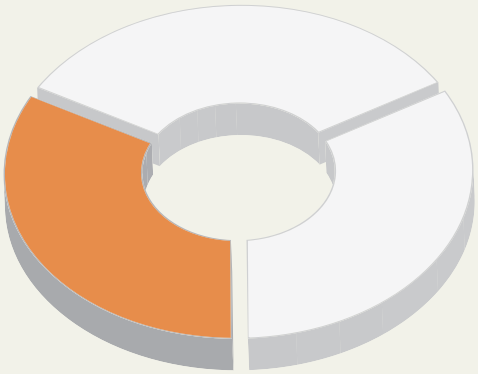

Actuators electric and pneumatic



Electric actuators
type EA11

- 100 - 230 V AC, 24 V AC/DC
- 20 Nm peak (F05)
- 150 000 cycles, 40% ED
- Position Feedback optional
- Fail-safe modul optional
- Heating Element optional



Electric actuators
type EA21, EA31, EA42

- 100-230 V AC, 24 V AC/DC
- EA21: 20 Nm peak (F05) 100% ED
- EA31: 120 Nm peak (F07) 50% ED
- EA42: 250 Nm peak (F07) 35% ED
- Accessory like EA11 plus additional
- with monitoring and positioner options



Electric actuators
type EA25, EA45, EA120, EA250

- Replaces type EA21 - 42
- 100 – 230 V AC, 24 V AC/DC
- Torques from 25 Nm – 250 Nm
- LED enforced position feedback
- Standard: Position Feedback, Heater
  Optional:
- Fail-safe return unit integrated
- Positioner
- Monitoring
- Profibu



Pneumatic actuator
type PA11 / PA21

- FC, FO, DA
- Rack and pinion principle
- Accessory interface acc. ISO5211
- Visual position indication
- Full plastic solution
- PA11: 10 Nm / PA21: 20 Nm

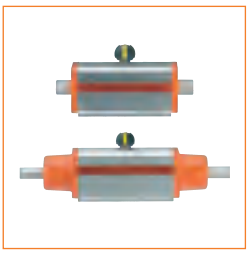

Pneumatic actuator
type PA30 - PA90

- FC, FO, DA
- Scotch Yoke principle
- Accessory interface acc. ISO5211
- Visual position indication
- Adjustable end stops
- Various coatings on request

Actuated Butterfly Valves



Butterfly Valve electric
type 145 / 146 / 147*

- Electric actuated Butter y Valve
- Actuator type: EA45 / 120 / 250
  (24 V, 110 - 230 V)
- Plastic Butter y Valve Wafer/ Lugstyle
- Butter y Valve type 567/578
- PVC-U, PVC-C, ABS, PP-H, PVDF
- 567: DN50 - DN600; 578: DN50 - DN300



Butterfly Valve electric
type 038-E / 039-E

- Electric actuated Butter y Valve
- Actuator type: EA45 / 120 / 250
  (24 V, 110-230 V)
- Metal Butter y Valve Wafer/ Lugstyle
- Butter y Valve type 038 / 039
- 038/039: Ductile Iron with Powder/ Epoxy
  Coating/ Rilsan Coating
- 038: DN50 - DN600,
  039: DN50 - DN1200

* Predecessor type 140 / 143 / 144 with electric actuators type EA31 / 42

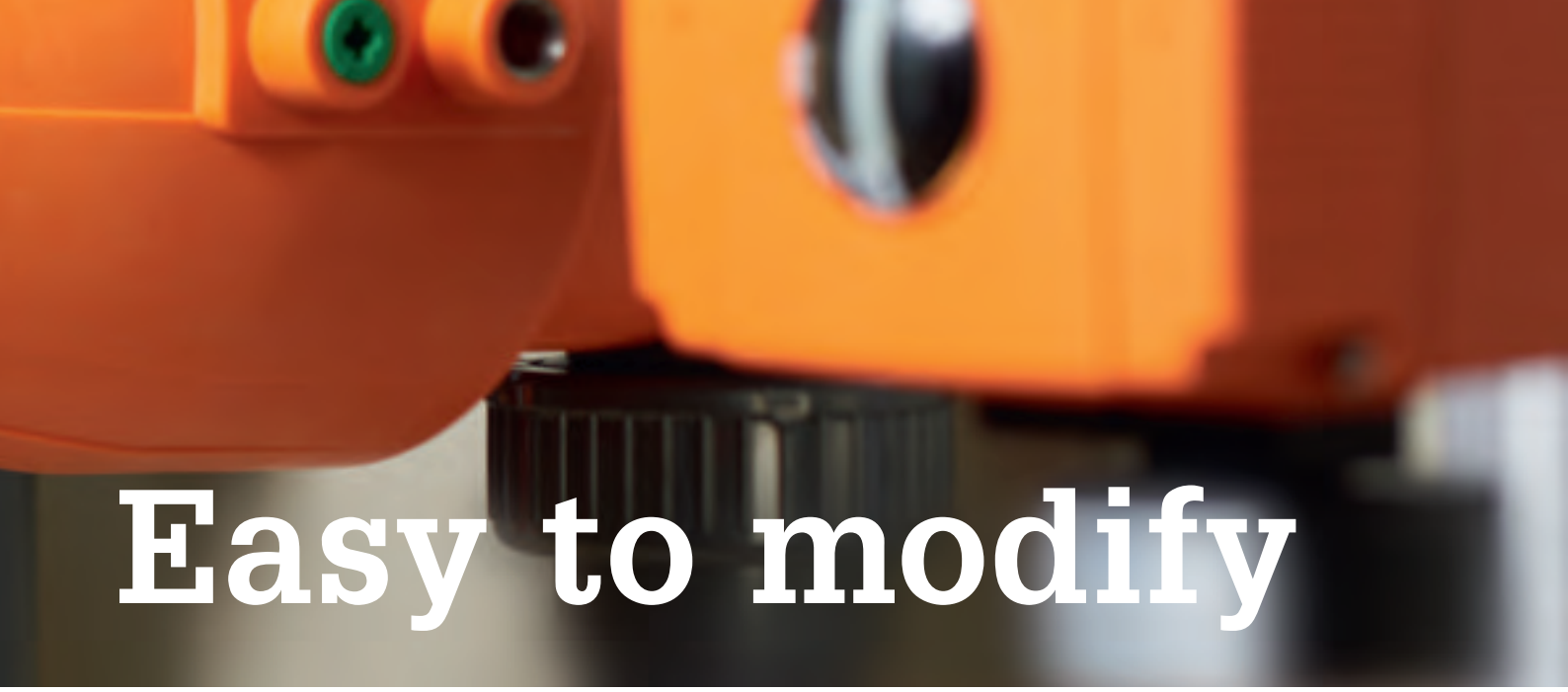

Easy to modify

Actuated Butterfly Valves



Butterfly Valve pneumatic
type 240 / 243 / 244

- Pneumatic actuated Butter y Valve
- Actuator Type: PA30-PA90
- Plastic Butter y Valve Wafer/ Lugstyle
- Butter y Valve Typ 567/578
- PVC-U, PVC-C, ABS, PP-H, PVDF
- 567: DN50-DN600; 578: DN50-DN300



Butterfly Valve pneumatic
type 038-P / 039-P

- Pneumatic actuated Butter y Valve
- Actuator Type: PA30-PA70
- Metal Butter y Valve Wafer/ Lugstyle
- Butter y Valve Type 038/039
- 038/039: Ductile Iron with Powder/Epoxy Coating/ Rilsan Coating
- 038: DN50-DN600; 039: DN50-DN1200

Actuated Ball Valves



Electric Ball Valve
type 104

- Electric actuated 2-way Ball Valve
- Actuator Type: EA04 (24V, 85-230V)
- Actuating angle 0-90°
- Ball Valve 546
- PVC-C, PVC-U, PP-H
- DN10 – DN50 3/8 - 2"
- Limited acces sory range
- Low cycle applications



Electric Ball Valve
type 107

- Electric actuated 2-way Ball Valve
- Actuator Type: EA11 (24 V, 110-230 V)
- Actuating angle 90°
- Ball Valve 546
- ABS, PVC-C, PVC-U, PP-H, PVDF
- DN10-DN50



Electric Ball Valve
type 179 - 184*

- Electric actuated 2-way Ball Valve
- Actuator Type: EA25 / 45 / 120 (24 V, 110-230 V)
- Actuating angle 90°
- Ball Valve 546
- ABS, PVC-C, PVC-U, PP-H, PVDF
- EA25 DN10-DN50; EA45 /120 DN65-DN100



Electric Ball Valve
type 167 - 170**

- Electric actuated 3-way Ball Valve
- Actuator Type: EA25 (24 V, 110-230 V)
- Actuating angle 90°; max. 180°
- Ball Valve 543
- ABS, PVC-C, PVC-U, PP, PVDF
- DN10–DN50



Pneumatic Ball Valve
type 285 - 288

- Pneumatic actuated 3-way Ball Valve
- Actuator Type: PA11/PA21
- Actuating angle 90°
- Ball Valve 543
- ABS, PVC-C, PVC-U, PP, PVDF
- DN10-DN50



Pneumatic Ball Valve
type 230 - 235

- Pneumatic actuated 2-way Ball Valve
- Actuator Type: PA11/PA21 (<DN65)
- Actuator Type: PA30-PA90 (>DN50)
- Ball Valve 546
- ABS, PVC-C, PVC-U, PP-H, PVDF
- DN10-DN100

* Predecessor type 130 - 135 with electric actuators type EA21 / 31

** Predecessor type 185 - 188 with electric actuator type EA21

Actuated Diaphragm Valves



Diaphragm Valve
type 604 / 605

- PVC-U, PVC-C, PP-H, PVDF
- EPDM, FPM, PTFE / EPDM, PTFE / FPM
- DN15
- PN6
- pneumatic actuated FC, FO, DA



Diaphragm Valve DIASTAR
TenPLUS

- ABS, PVC-U, PVC-C, PP-H, PVDF, PVDF-HP
- EPDM, FPM, PTFE / EPDM, PTFE / FPM
- DN15-DN50
- PN10 (both sides)
- pneumatic actuated FC, FO, DA
- Accessories available



Diaphragm Valve DIASTAR
Six

- ABS, PVC-U, PVC-C, PP-H
- EPDM, FPM
- DN15 - DN50
- PN6
- pneumatic actuated FC



Diaphragm Valve DIASTAR
Sixteen

- PVDF, PVDF-HP
- EPDM, FPM, PTFE / EPDM, PTFE / FPM
- DN15-DN50
- PN16
- pneumatic actuated FC, FO, DA
- Accessories available



Diaphragm Valve DIASTAR
Ten

- ABS, PVC-U, PVC-C, PP-H, PP-N, PVDF, PVDF-HP
- EPDM, FPM, PTFE / EPDM, PTFE / FPM
- DN15 - DN50
- PN10
- pneumatic actuated FC, FO, DA
- Accessories available



Diaphragm Valve DIASTAR
025

- ABS, PVC-U, PVC-C, PP-H, PVDF, PVDF-HP
- EPDM, FPM, PTFE/EPDM, PTFE / FPM
- DN65 - DN150
- up to PN10
- pneumatic actuated FC, FO, DA
- Accessories available

Actuated process control valves



Solenoid Valve
type 157

- direct acting pivoted armature valve
- 2/2-Ways
- PVC-U
- EPDM, FPM
- 230 V AC, 24 V AC, 24 V DC
- DN4-DN8
- 0-4 bar depending on dimension



Solenoid Valve
type 160 / 161

- direct acting pivoted armature valve
- 2/2- or 3/2-Ways
- PVC-U
- EPDM, FPM
- 230 V AC, 24 V AC, 24 V DC
- DN10-DN20
- 0-3 bar depending on dimension



Solenoid Valve
type 165

- pilot assisted solenoid valve
- 2/2-Ways
- PVC-U, PVDF
- EPDM, FPM
- 230 V AC, 110 V AC, 24 V AC, 24 V DC
- DN15 - DN50
- 0.5 - 6 bar



Solenoid Valve
type 166

- direct acting pivoted armature valve
- 2/2- or 3/2-Ways
- PVC-U, PVDF
- EPDM, FPM
- 230 V AC, 110 V AC, 24 V AC, 24 V DC
- DN3 - DN5
- 0-10 bar depending on dimension



Easy to regulate

Pressure regulating valves



Pressure Reducing Valve type 582

- PVC-U, CPVC, PP-H, PVDF
- Spigot or union connection
- O-ring Material: EPDM, FPM
- DN10–DN50
- 0.5 - 9 bar or 0.3 - 3 bar
- Manometer with or without gauge guard optional



Pressure Retaining Valve type 586

- PVC-U, CPVC, PP-H, PVDF
- Spigot or union connection
- O-ring Material: EPDM, FPM
- DN10–DN50
- 0.5 - 9 bar or 0.3 - 3 bar
- Manometer with or without gauge guard optional



Pressure Retaining Valve type V86

- PVC-U, PP, PVDF
- EPDM, EPDM-PTFE-coated
- V86: DN65 - 80: 1 - 6 bar
  DN100: 1 - 4 bar



Pressure Reducing Valve type V82

- PVC-U, PP, PVDF
- EPDM, EPDM-PTFE-coated
- V82: DN65 - 80: 0.5 - 6 bar
  DN100 0.5 - 4 bar

Electric accessories

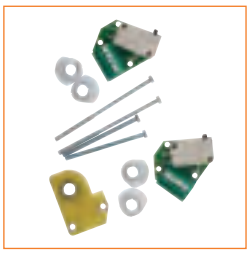

Limit switches (position feedback) for EA11 - 42

- Mechanical switches (AgNi or Au)
- NPN/PNP
- Middle position (3way Ball Valve)
- Additional 2 limit switches
- For EA11: AgNi switches only

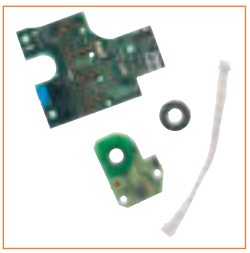

Monitoring and Positioner Options for EA21 - 42

Monitoring board with:
- Cycle counter
- Cycle Time extention and/ or monitoring
- Current Monitoring

Positioner with:
- Input: 0 - 10V or 4 - 20mA
- Feedback: 4 - 20mA



Heating element and Fail-safe return unit for EA11 - 42

- Heating element reduces condensation
- Caused by temperature variation
- Fail safe return unit for safe
- Adjustment in case of power failure
- 230 V AC; 24 V AC/DC



Accessories for type EA25 - 250

- Fail-safe return unit to be installed in housing
- Positioner
- Monitoring Board
- Profibu



Pneumatic accessories



Solenoid pilot valve 3/2-ways type PV94

- 230 V, 50-60 Hz
- 115 V, 50-60 Hz
- 24 V, 50-60 Hz
- 24 V DC
- G⅛, G¼, G6mm
- DN1.2



Solenoid pilot valve 3/2-ways type PV95

- 230 V, 50-60 Hz
- 115 V, 50-60 Hz
- 24 V, 50-60 Hz
- 24 V DC
- G⅛, G¼;
- DN1.5 - DN2



Solenoid Pilot valve type 2000

- Modular version for 3/2-way and 5/2-way valves
- 24 V DC
- Connection module AS-Interface
- Connection module profibus interfac



Solenoid pilot valve type MNL 532

- Version for 3/2-way and 5/2-way
- Namur connection
- Material of body: Aluminium
- 24 V AC, 24 V DC, 48 V AC, 110 V AC, 230 V AC



Electric position feedback type ER 52-1/ER53-1

- For pneumatic stroke actuators
- For Diastar Ten, TenPLUS, Sixteen, 025
- Mechanical switches (AgNi or Au)
- NPN/PNP, Namur
- With visual position indication



Electric position feedback limit switch box

- For pneumatic rotary actuators
- For PA11 - 90:
- Mechanical switches (AgNi or Au)
- NPN/PNP, Namur
- With visual position indication



Stroke limiter/ manual override

- For Diastar all type Ten, TenPLUS, Sixteen, 025



Digital electro-pneumatic positioner type DSR 500

- Mounted on pneumatic control valves
- Linear and rotary actuators
- Nominal stroke 3 - 28 mm
- Self-learning
- Control signal 4 - 20 mA
- 24 V DC

Communication Products

Different communication protocols for different needs



Our automation loop can be managed with various communication technologies and can therefore be seamlessly integrated into existing plant management systems.
We offer analogue and digital communication technologies which support on / off or continuous control loops. Benefits are less wiring, faster installations and more efficient diagnostic and parameterization capabilities.

Communication products

An overview of the key products

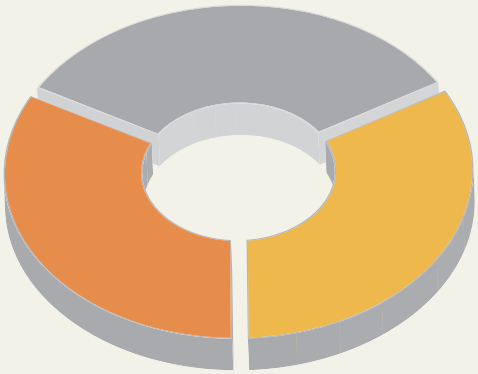

Communication



Profibus Concentrator type 3-0486

- Connect GF Actuated Valves and Sensors to Profibus automation networ s
- Supports six S³L sensors or relay modules plus a proportional controlled actuated valve
- Four of the (S³L) inputs support fl w frequency devices for cost effective w monitoring
- Two of the (S³L) inputs support 4 to 20 mA current loop inputs for connections to third party sensors
- 4 to 20 mA current loop input and output for connection to GF proportional cont-rolled actuated valves



Profibus

- Modular version for 3/2-way and 5/2-way valves
- 24 V DC
- Connection module AS-Interface
- Connection module profibus interfac



AS-interface for pneumatic rotary actuators

- Pilot valve 5/2-Ways
- Electric feedback integrated
- Full plastic housing
- Optical status indicator
- AS Interface Version 3.0



AS-interface for electric actuators

- Integrated control an electric
- Feedback
- For 24 V DC actuators
- For EA11-EA42
- Manual override standard



AS-interface for manual valves with feedback

- With integrated feedback
- Ideal for Ball Valves
- Ideal for Butter y Valves
- Ideal for Diaphragm Valves



AS-interface for pneumatic stroke actuators

- Pilot valve 3/2-Ways
- Compact design
- Full plastic housing
- Optical status indicator
- AS Interface Version 3.0



AS-interface for sensor with switch output

- With switiching output
- For level switch
- For fl w switch
- For pressure switch
- For temperature switch



HART

- HART Protocol superimposes digital signals on top of the 4-20 mA analog signal
- Communication occurs between two HART-enabled devices
- HART protocol operates according to the master-slave method

Valves

The right valve for your application



We offer one of the most comprehensive valve product ranges, which enables you to find the right match for your application.
Our valves are available in a wide selection of dimensions, materials, chemical resistances, standards, actuation, operation principles, and pipe connections and are designed for long service life. The combination of the right valve selection and our high product quality leads to a favorable total cost of ownership.

Ball valve type 546





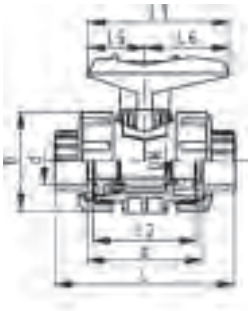



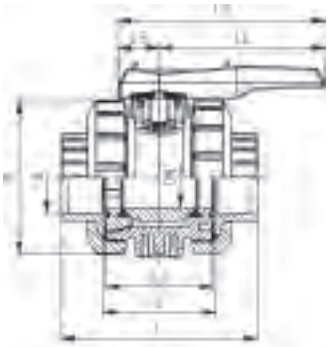

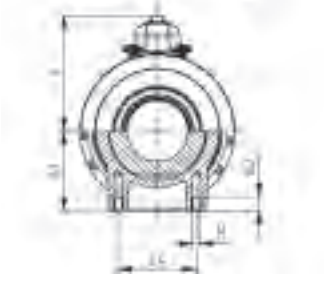

Ball valve type 546 PVC-U
With mounting inserts
With solvent cement sockets metric

Model:

- For easy installation and removal
- Ball seals PTFE
- Integrated stainless steel mounting inserts
- z-dimension, valve end and union nut are **not compatible** with type 346 (DN10/15-50) resp. type 370 (DN65-100)

Option:

- Individual configuration of the valve (see diagram)
- Multifunctional module with integrated limit switches
- Pneumatic or electric actuators from +GF+

d (mm)	Size (inch)	DN (mm)	PN (bar)	kv-value (Δp=1 bar) (l/min)	EPDM Code	Weight (kg)	FPM Code	Weight (kg)
16		10	16	71	**161 546 061**	0.153	**161 546 071**	0.156
20		15	16	185	**161 546 062**	0.156	**161 546 072**	0.158
25		20	16	350	**161 546 063**	0.240	**161 546 073**	0.242
32		25	16	700	**161 546 064**	0.343	**161 546 074**	0.345
40		32	16	1000	**161 546 065**	0.610	**161 546 075**	0.615
50		40	16	1600	**161 546 066**	0.838	**161 546 076**	0.844
63		50	16	3100	**161 546 067**	1.537	**161 546 077**	1.552
75	2 ½	65	16	5000	**161 546 068**	4.343	**161 546 078**	3.563
90		80	16	7000	**161 546 069**	6.184	**161 546 079**	5.376
110		100	16	11000	**161 546 070**	8.642	**161 546 080**	11.600

d (mm)	D (mm)	H (mm)	H1 (mm)	H2 (mm)	L (mm)	L1 (mm)	L2 (mm)	L4 (mm)	L5 (mm)	L6 (mm)	M	z (mm)	closest inch (inch)
16	50	57	27	12	92	77	56	25	32	45	6	64	⅜
20	50	57	27	12	95	77	56	25	32	45	6	64	½
25	58	67	30	12	110	97	65	25	39	58	6	72	¾
32	68	73	36	12	123	97	71	25	39	58	6	79	1
40	84	90	44	15	146	128	85	45	54	74	8	94	1 ¼
50	97	97	51	15	157	128	89	45	54	74	8	95	1 ½
63	124	116	64	15	183	152	101	45	66	87	8	107	2
75	166	149	85	15	233	270	136	70	64	206	8	144	2 ½
90	200	161	105	15	254	270	141	70	64	206	8	151	3
110	238	178	123	22	301	320	164	120	64	256	12	174	4





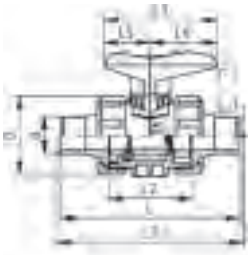



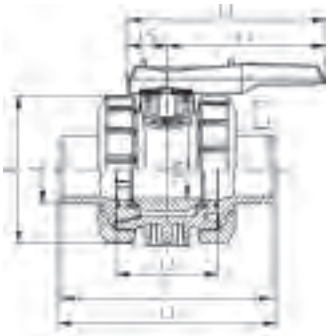

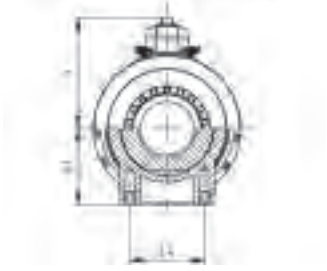

Ball valve type 546 PVC-U
With mounting inserts
With solvent cement spigots metric

Model:

- For easy installation and removal
- Ball seals PTFE
- Integrated stainless steel mounting inserts
- z-dimension, valve end and union nut are **not compatible** with type 346 (DN10/15-50) resp. type 370 (DN65-100)

Option:

- Individual configuration of the valve (see diagram)
- Multifunctional module with integrated limit switches
- Pneumatic or electric actuators from +GF+

d (mm)	DN (mm)	PN (bar)	kv-value (Δp=1 bar) (l/min)	EPDM Code	Weight (kg)	FPM Code	Weight (kg)
16	10	16	71	**161 546 721**	0.157	**161 546 731**	0.157
20	15	16	185	**161 546 722**	0.157	**161 546 732**	0.157
25	20	16	350	**161 546 723**	0.242	**161 546 733**	0.242
32	25	16	700	**161 546 724**	0.359	**161 546 734**	0.347
40	32	16	1000	**161 546 725**	0.620	**161 546 735**	0.620
50	40	16	1600	**161 546 726**	0.869	**161 546 736**	0.845
63	50	16	3100	**161 546 727**	1.550	**161 546 737**	1.550
75	65	16	5000	**161 546 728**	3.689	**161 546 738**	5.100
90	80	16	7000	**161 546 729**	5.512	**161 546 739**	7.500
110	100	16	11000	**161 546 730**	11.900	**161 546 740**	11.900

d (mm)	D (mm)	H (mm)	H1 (mm)	H2 (mm)	L (mm)	L1 (mm)	L2 (mm)	L3 (mm)	L4 (mm)	L5 (mm)	L6 (mm)	M	closest inch (inch)
16	50	57	27	12	114	77	56	130	25	32	45	M6	⅜
20	50	57	27	12	124	77	56	130	25	32	45	M6	½
25	58	67	30	12	144	97	65	150	25	39	58	M6	¾
32	68	73	36	12	154	97	71	160	25	39	58	M6	1
40	84	90	44	15	174	128	85	180	45	54	74	M8	1 ¼
50	97	97	51	15	194	128	89	200	45	54	74	M8	1 ½
63	124	116	64	15	224	152	101	230	45	66	87	M8	2
75	166	149	85	15	284	270	136	290	70	64	206	M8	2 ½
90	200	161	105	15	300	270	141	310	70	64	206	M8	3
110	238	178	123	22	340	320	164	350	120	64	256	M12	4





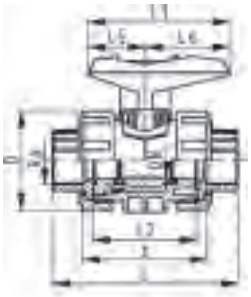

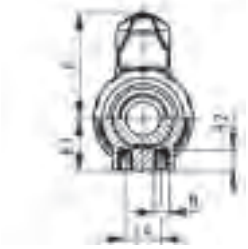

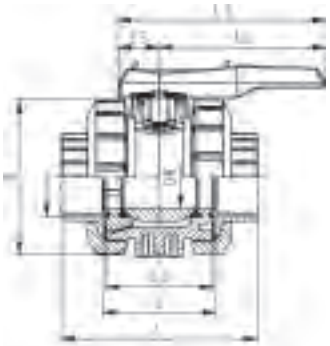

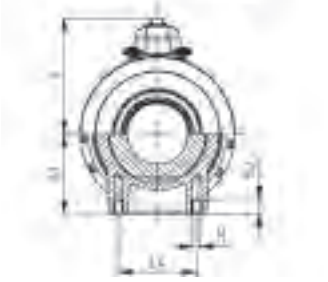

Ball valve type 546 PVC-U
With mounting inserts
With threaded sockets Rp

Model:

- For easy installation and removal
- Ball seals PTFE
- Integrated stainless steel mounting inserts
- z-dimension, valve end and union nut are **not compatible** with type 346 (DN10/15-50) resp. type 370 (DN65-100)

Option:

- Individual configuration of the valve (see diagram)
- Multifunctional module with integrated limit switches
- Pneumatic or electric actuators from +GF+

Rp (inch)	DN (mm)	PN (bar)	kv-value (Δp=1 bar) (l/min)	EPDM Code	Weight (kg)	FPM Code	Weight (kg)
⅜	10	10	71	**161 546 741**	0.152	**161 546 751**	0.152
½	15	10	185	**161 546 742**	0.159	**161 546 752**	0.152
¾	20	10	350	**161 546 743**	0.242	**161 546 753**	0.232
1	25	10	700	**161 546 744**	0.352	**161 546 754**	0.332
1 ¼	32	10	1000	**161 546 745**	0.605	**161 546 755**	0.605
1 ½	40	10	1600	**161 546 746**	0.805	**161 546 756**	0.805
2	50	10	3100	**161 546 747**	1.580	**161 546 757**	1.465
2 ½	65	10	5000	**161 546 748**	5.000	**161 546 758**	5.000
3	80	10	7000	**161 546 749**	1.000	**161 546 759**	7.500
4	100	10	11000	**161 546 750**	11.700	**161 546 760**	11.700

Rp (inch)	D (mm)	H (mm)	H1 (mm)	H2 (mm)	L (mm)	L1 (mm)	L2 (mm)	L4 (mm)	L5 (mm)	L6 (mm)	M	z (mm)
⅜	50	57	27	12	95	77	56	25	32	45	M6	69
½	50	57	27	12	100	77	56	25	32	45	M6	67
¾	58	67	30	12	114	97	65	25	39	58	M6	78
1	68	73	36	12	127	97	71	25	39	58	M6	85
1 ¼	84	90	44	15	146	128	85	45	54	74	M8	100
1 ½	97	97	51	15	152	128	89	45	54	74	M8	106
2	124	116	64	15	177	152	101	45	66	87	M8	121
2 ½	166	149	85	15	233	270	136	70	64	206	M8	144
3	200	161	105	15	254	270	141	70	64	206	M8	151
4	238	178	123	22	301	320	164	120	64	256	M12	174



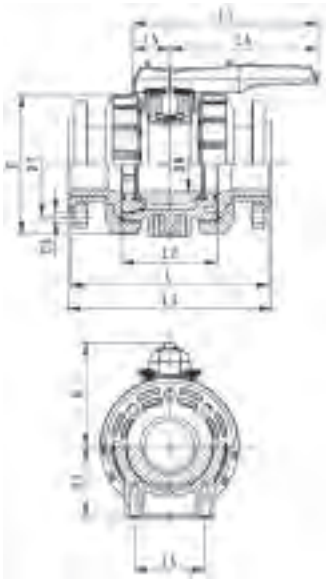

Ball valve type 546 PVC-U
With mounting inserts
With backing flanges PVC-U metric

Model:

- For easy installation and removal
- Ball seals PTFE
- Integrated stainless steel mounting inserts
- z-dimension, valve end and union nut are **not compatible** with type 346 (DN10/15-50) resp. type 370 (DN65-100)
- Overall length according to EN 558
- Connecting dimension: ISO 7005 PN10, EN 1092 PN10, DIN 2501 PN10

Option:

- Individual configuration of the valve (see diagram)
- Multifunctional module with integrated limit switches
- Pneumatic or electric actuators from +GF+

d (mm)	DN (mm)	PN (bar)	kv-value (Δp=1 bar) (l/min)	EPDM Code	Weight (kg)	FPM Code	Weight (kg)
75	65	10	5000	**161 546 108**	4.764	**161 546 118**	7.200
90	80	10	7000	**161 546 109**	6.983	**161 546 119**	7.008
110	100	10	11000	**161 546 110**	11.879	**161 546 120**	16.500

d (mm)	D (mm)	H (mm)	H1 (mm)	H2 (mm)	L (mm)	L1 (mm)	L2 (mm)	L3 (mm)	L4 (mm)	L5 (mm)	L6 (mm)	M	closest inch (inch)
75	166	149	85	15	284	270	136	290	70	64	206	M8	1 ¼
90	200	161	105	15	300	270	141	310	70	64	206	M8	1 ½
110	238	178	123	22	340	320	164	350	120	64	256	M12	2



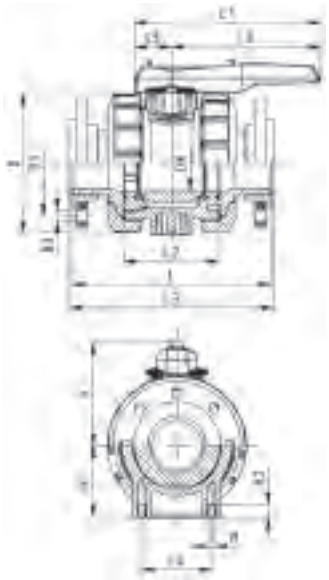

Ball valve type 546 PVC-U
With mounting inserts
With backing flanges PP-st metric

Model:

- For easy installation and removal
- Ball seals PTFE
- Integrated stainless steel mounting inserts
- z-dimension, valve end and union nut are **not compatible** with type 346 (DN10/15-50) resp. type 370 (DN65-100)
- Overall length according to EN 558
- Connecting dimension: ISO 7005, EN 1092, BS 4504, DIN 2501

Option:

- Individual configuration of the valve (see diagram)
- Multifunctional module with integrated limit switches
- Pneumatic or electric actuators from +GF+

d (mm)	DN (mm)	PN (bar)	kv-value (Δp=1 bar) (l/min)	EPDM Code	Weight (kg)	FPM Code	Weight (kg)
75	65	16	5000	**161 546 948**	9.100	**161 546 958**	9.100
90	80	16	7000	**161 546 949**	12.400	**161 546 959**	12.400
110	100	16	11000	**161 546 950**	13.825	**161 546 960**	18.500

d (mm)	D (mm)	H (mm)	H1 (mm)	L (mm)	L1 (mm)	L2 (mm)	L3 (mm)	L4 (mm)	L5 (mm)	L6 (mm)	closest inch (inch)
75	166	149	85	284	270	136	290	70	64	206	1 ¼
90	200	161	105	300	270	141	310	70	64	206	1 ½
110	238	178	123	340	320	164	350	120	64	256	2





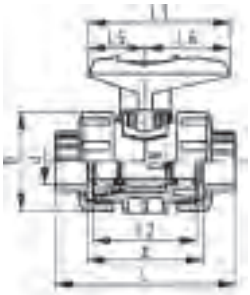

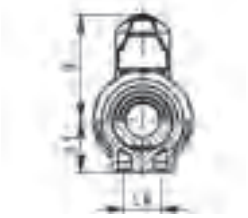

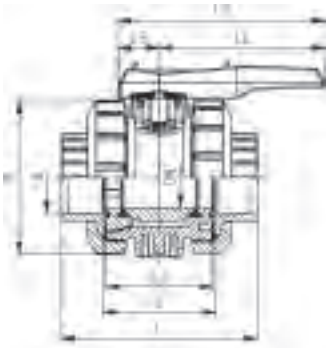

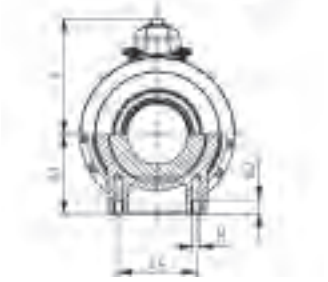

Ball valve type 546 PVC-U
With solvent cement sockets metric

Model:

- For easy installation and removal
- Ball seals PTFE
- Without mounting inserts
- z-dimension, valve end and union nut are **not compatible** with type 346 (DN10/15-50) resp. type 370 (DN65-100)

Option:

- Individual configuration of the valve (see diagram)
- Multifunctional module with integrated limit switches
- Pneumatic or electric actuators from +GF+

d (mm)	DN (mm)	PN (bar)	kv-value (Δp=1 bar) (l/min)	EPDM Code	Weight (kg)	FPM Code	Weight (kg)
16	10	16	71	**161 546 001**	0.148	**161 546 011**	0.150
20	15	16	185	**161 546 002**	0.150	**161 546 012**	0.152
25	20	16	350	**161 546 003**	0.233	**161 546 013**	0.237
32	25	16	700	**161 546 004**	0.336	**161 546 014**	0.343
40	32	16	1000	**161 546 005**	0.600	**161 546 015**	0.603
50	40	16	1600	**161 546 006**	0.830	**161 546 016**	0.851
63	50	16	3100	**161 546 007**	1.523	**161 546 017**	1.542
75	65	16	5000	**161 546 008**	3.781	**161 546 018**	3.794
90	80	16	7000	**161 546 009**	5.338	**161 546 019**	7.400
110	100	16	11000	**161 546 010**	8.650	**161 546 020**	11.600

d (mm)	D (mm)	H (mm)	H1 (mm)	L (mm)	L1 (mm)	L2 (mm)	L4 (mm)	L5 (mm)	L6 (mm)	z (mm)	closest inch (inch)
16	50	57	27	92	77	56	25	32	45	64	⅜
20	50	57	27	95	77	56	25	32	45	64	½
25	58	67	30	110	97	65	25	39	58	72	¾
32	68	73	36	123	97	71	25	39	58	79	1
40	84	90	44	146	128	85	45	54	74	94	1 ¼
50	97	97	51	157	128	89	45	54	74	95	1 ½
63	124	116	64	183	152	101	45	66	87	107	2
75	166	149	85	233	270	136	70	64	206	144	2 ½
90	200	161	105	254	270	141	70	64	206	151	3
110	238	178	123	301	320	164	120	64	256	174	4





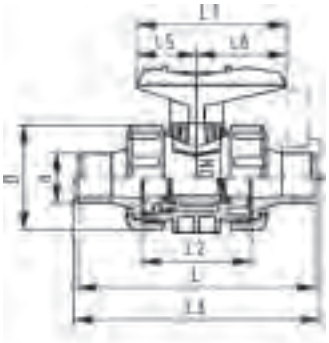

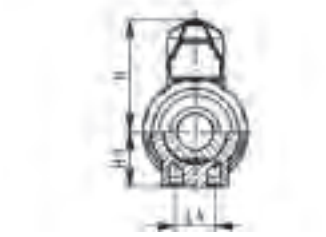

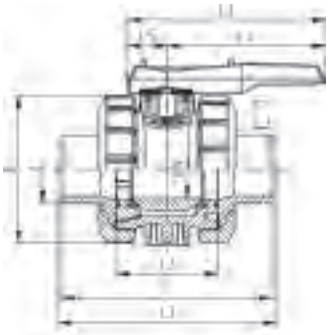

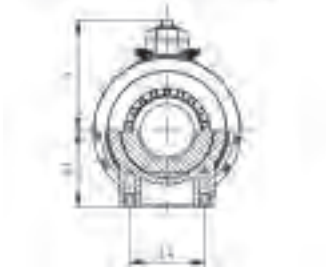

Ball valve type 546 PVC-U
With solvent cement spigots metric

Model:

- For easy installation and removal
- Ball seals PTFE
- Without mounting inserts
- z-dimension, valve end and union nut are **not compatible** with type 346 (DN10/15-50) resp. type 370 (DN65-100)

Option:

- Individual configuration of the valve (see diagram)
- Multifunctional module with integrated limit switches
- Pneumatic or electric actuators from +GF+

d (mm)	DN (mm)	PN (bar)	kv-value (Δp=1 bar) (l/min)	EPDM Code	Weight (kg)	FPM Code	Weight (kg)
16	10	16	71	**161 546 041**	0.155	**161 546 051**	0.155
20	15	16	185	**161 546 042**	0.155	**161 546 052**	0.155
25	20	16	350	**161 546 043**	0.240	**161 546 053**	0.240
32	25	16	700	**161 546 044**	0.351	**161 546 054**	0.345
40	32	16	1000	**161 546 045**	0.610	**161 546 055**	0.615
50	40	16	1600	**161 546 046**	0.840	**161 546 056**	0.840
63	50	16	3100	**161 546 047**	1.602	**161 546 057**	1.545
75	65	16	5000	**161 546 048**	5.100	**161 546 058**	5.100
90	80	16	7000	**161 546 049**	5.776	**161 546 059**	7.500
110	100	16	11000	**161 546 050**	11.900	**161 546 060**	11.900

d (mm)	D (mm)	H (mm)	H1 (mm)	L (mm)	L1 (mm)	L2 (mm)	L3 (mm)	L4 (mm)	L5 (mm)	L6 (mm)	closest inch (inch)
16	50	57	27	114	77	56		25	32	45	⅜
20	50	57	27	124	77	56	130	25	32	45	½
25	58	67	30	144	97	65	150	25	39	58	¾
32	68	73	36	154	97	71	160	25	39	58	1
40	84	90	44	174	128	85	180	45	54	74	1 ¼
50	97	97	51	194	128	89	200	45	54	74	1 ½
63	124	116	64	224	152	101	230	45	66	87	2
75	166	149	85	284	270	136	290	70	64	206	2 ½
90	200	161	105	300	270	141	310	70	64	206	3
110	238	178	123	340	320	164	350	120	64	256	4





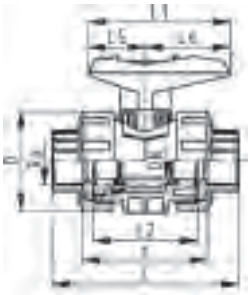



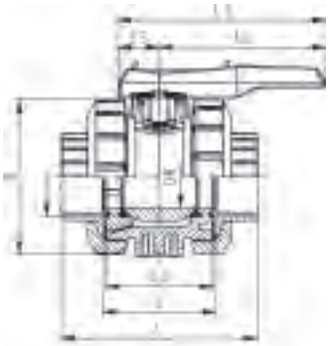

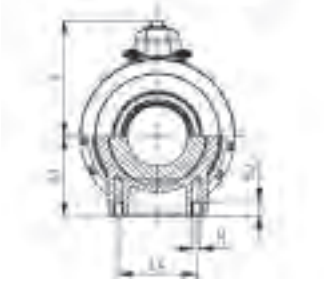

Ball valve type 546 PVC-U
With threaded sockets Rp

Model:

- For easy installation and removal
- Ball seals PTFE
- Without mounting inserts
- z-dimension, valve end and union nut are **not compatible** with type 346 (DN10/15-50) resp. type 370 (DN65-100)

Option:

- Individual configuration of the valve (see diagram)
- Multifunctional module with integrated limit switches
- Pneumatic or electric actuators from +GF+

Rp (inch)	DN (mm)	PN (bar)	kv-value (Δp=1 bar) (l/min)	EPDM Code	Weight (kg)	FPM Code	Weight (kg)
⅜	10	10	71	**161 546 021**	0.150	**161 546 031**	0.150
½	15	10	185	**161 546 022**	0.155	**161 546 032**	0.150
¾	20	10	350	**161 546 023**	0.238	**161 546 033**	0.230
1	25	10	700	**161 546 024**	0.348	**161 546 034**	0.330
1 ¼	32	10	1000	**161 546 025**	0.603	**161 546 035**	0.600
1 ½	40	10	1600	**161 546 026**	0.800	**161 546 036**	0.800
2	50	10	3100	**161 546 027**	1.575	**161 546 037**	1.460
2 ½	65	10	5000	**161 546 028**	5.000	**161 546 038**	5.000
3	80	10	7000	**161 546 029**	5.437	**161 546 039**	7.500
4	100	10	11000	**161 546 030**	11.700	**161 546 040**	11.700

Rp (inch)	D (mm)	H (mm)	H1 (mm)	L (mm)	L1 (mm)	L2 (mm)	L4 (mm)	L5 (mm)	L6 (mm)	z (mm)
⅜	50	57	27	95	77	56	25	32	45	69
½	50	57	27	100	77	56	25	32	45	67
¾	58	67	30	114	97	65	25	39	58	78
1	68	73	36	127	97	71	25	39	58	85
1 ¼	84	90	44	146	128	85	45	54	74	100
1 ½	97	97	51	152	128	89	45	54	74	106
2	124	116	64	177	152	101	45	66	87	121
2 ½	166	149	85	233	270	136	70	64	206	144
3	200	161	105	254	270	141	70	64	206	151
4	238	178	123	301	320	164	120	64	256	174





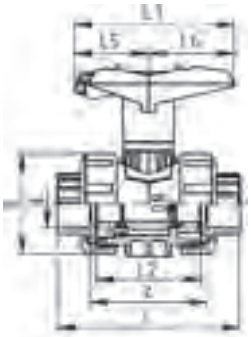

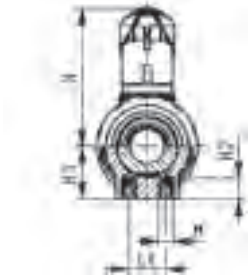

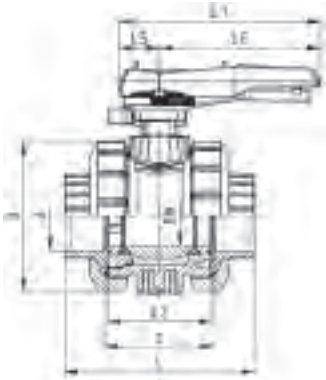

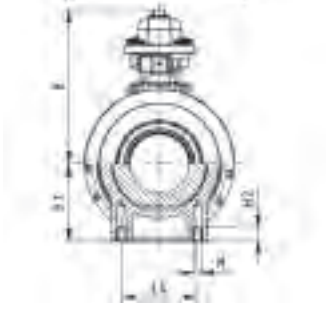

Ball valve type 546 PVC-U
With lockable handle
With solvent cement sockets metric

Model:

- For easy installation and removal
- Ball seals PTFE
- Integrated stainless steel mounting inserts
- z-dimension, valve end and union nut are **not compatible** with type 346 (DN10/15-50) resp. type 370 (DN65-100)
- Lockable hand lever with ratchet settings

Option:

- Individual configuration of the valve (see diagram)
- Multifunctional module with integrated limit switches
- Pneumatic or electric actuators from +GF+

d (mm)	Size (inch)	DN (mm)	PN (bar)	kv-value (Δp=1 bar) (l/min)	EPDM Code	Weight (kg)	FPM Code	Weight (kg)
16		10	16	71	**161 546 081**	0.165	**161 546 091**	0.165
20		15	16	185	**161 546 082**	0.165	**161 546 092**	0.165
25		20	16	350	**161 546 083**	0.255	**161 546 093**	0.255
32		25	16	700	**161 546 084**	0.364	**161 546 094**	0.355
40		32	16	1000	**161 546 085**	0.640	**161 546 095**	0.640
50		40	16	1600	**161 546 086**	0.840	**161 546 096**	0.840
63		50	16	3100	**161 546 087**	1.571	**161 546 097**	1.500
75	2 ½	65	16	5000	**161 546 088**	5.200	**161 546 098**	5.200
90		80	16	7000	**161 546 089**	7.700	**161 546 099**	7.700
110		100	16	11000	**161 546 090**	12.000	**161 546 100**	12.000

d (mm)	D (mm)	H (mm)	H1 (mm)	H2 (mm)	L (mm)	L1 (mm)	L2 (mm)	L4 (mm)	L5 (mm)	L6 (mm)	M	z (mm)	closest inch (inch)
16	50	79	27	12	92	87	56	25	42	45	M6	64	⅜
20	50	79	27	12	95	87	56	25	42	45	M6	64	½
25	58	88	30	12	110	108	65	25	50	58	M6	72	¾
32	68	94	36	12	123	108	71	25	50	58	M6	79	1
40	84	113	44	15	146	140	85	45	66	75	M8	94	1 ¼
50	97	119	51	15	157	140	89	45	66	75	M8	95	1 ½
63	124	141	64	15	183	165	101	45	78	87	M8	107	2
75	166	224	85	15	233	270	136	70	64	206	M8	144	2 ½
90	200	235	105	15	254	270	141	70	64	206	M8	151	3
110	238	245	123	22	301	320	164	120	64	256	M12	174	4



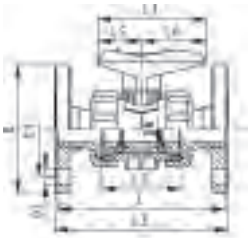

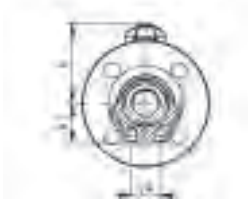

Ball valve type 546 PVC-U
With fixed flanges PVC-U serrated metric

Model:

- For easy installation and removal
- Ball seals PTFE
- Without mounting inserts
- z-dimension, valve end and union nut are not compatible with type 346
- Overall length according to EN 558
- Connecting dimension: ISO 7005 PN10, EN 1092 PN10, DIN 2501 PN10

Option:

- Individual configuration of the valve (see diagram)
- Multifunctional module with integrated limit switches
- Pneumatic or electric actuators from +GF+

d (mm)	DN (mm)	PN (bar)	kv-value (Δp=1 bar) (l/min)	EPDM Code	Weight (kg)	FPM Code	Weight (kg)
20	15	16	185	**800 000 182**	0.370	**800 000 192**	0.370
25	20	16	350	**800 000 183**	0.510	**800 000 193**	0.510
32	25	16	700	**800 000 184**	0.724	**800 000 194**	0.727
40	32	16	1000	**800 000 185**	1.235	**800 000 195**	1.230
50	40	16	1600	**800 000 186**	1.609	**800 000 196**	1.621
63	50	16	3100	**800 000 187**	2.636	**800 000 197**	2.653

d (mm)	D (mm)	D1 (mm)	D3 (mm)	H (mm)	H1 (mm)	L (mm)	L1 (mm)	L2 (mm)	L3 (mm)	L4 (mm)	L5 (mm)	L6 (mm)	closest inch (inch)
20	95	65	14	57	27	124	77	56	130	25	32	45	½
25	105	75	14	67	30	144	97	65	150	25	39	58	¾
32	115	85	14	73	36	154	97	71	160	25	39	58	1
40	140	100	18	90	44	174	128	85	180	45	54	74	1 ¼
50	150	110	18	97	51	194	128	89	200	45	54	74	1 ½
63	165	125	18	116	64	224	152	101	230	45	66	87	2



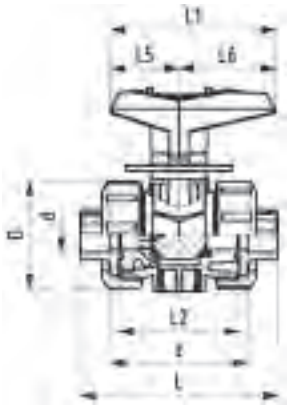

Linear ball valve type 546 PVC-U
With mounting inserts
With solvent cement sockets metric

Model:

- Excellent control characteristics
- Designed for easy installation and removal
- Ball seals PTFE
- Angle of operation 90° with scale
- Integrated stainless steel mounting inserts

Option:

- Individual configuration of the valve (see diagram)
- Pneumatic or electric actuators from +GF+
- Other materials on demand

d (mm)	DN (mm)	PN (bar)	kv-value (Δp=1 bar) (l/min)	EPDM Code	Weight (kg)
20	15	10	185	**800 052 602**	0.156
25	20	10	350	**800 052 603**	0.240
32	25	10	700	**800 052 604**	0.343
40	32	10	1000	**800 052 605**	0.610
50	40	10	1600	**800 052 606**	0.838
63	50	10	3100	**800 052 607**	1.537

d (mm)	D (mm)	H (mm)	H1 (mm)	L (mm)	L1 (mm)	L2 (mm)	L4 (mm)	L5 (mm)	L6 (mm)	z (mm)	closest inch (inch)
20	50	57	27	95	77	56	25	32	45	64	½
25	58	67	30	110	97	65	25	39	58	72	¾
32	68	73	36	123	97	71	25	39	58	79	1
40	84	90	44	146	128	85	45	54	74	94	1 ¼
50	97	97	51	157	128	89	45	54	74	95	1 ½
63	124	116	64	183	152	101	45	66	87	107	2

Product Configurator

Create your own ball valve

Variant Type

A01	Ball Valve 2-Way
A02	Linear Ball Valve 2-Way

Material

B01	PVC-U

Diameter

C05	d16 DN10 3/8"
C06	d20 DN15 1/2"
C07	d25 DN20 3/4"
C08	d32 DN25 1"
C09	d40 DN32 1 1/4"
C10	d50 DN40 1 1/2"
C11	d63 DN50 2"
C12	d75 DN65 2 1/2"
C13	d90 DN80 3"
C14	d110 DN100 4"

Treatment

D01	Standard PTFE Ball Seal
D02	Oil-Free PTFE Ball Seal
D03	Silicone-Free/Paint Compatible PTFE Ball Seal (ASTM)
D04	Silicone-Free/Paint Compatible PVDF Ball Seal (ISO)

Sealmaterial

E01	EPDM
E02	FPM
E03	FFPM

Threaded Inserts

F02	With Threaded Inserts

Endings*

G01	PVC-U Solvent Cement Socket ISO
…	…
G80 PVC-U	PVC-U Valve End blank

***Endings**

G01	PVC-U Solvent Cement Socket ISO
G02	PVC-U Solvent Cement Socket JIS
G03	PVC-U Solvent Cement Socket ASTM
G04	PVC-U Solvent Cement Socket BS
G05	PVC-U Solvent Cement Spigot ISO
G06	PVC-U Threaded Socket ISO Rp
G07	PVC-U Threaded Socket ISO Rp Reinforced
G08	PVC-U Threaded Socket ISO/JIS Rc
G09	PVC-U Threaded Socket ASTM NPT
G53	PVDF Threaded Socket ASTM NPT
G60	Fixed Flange PVC-U gerillt metrisch
G61	Fixed Flange PVC-U flach ISO
G62	Fixed Flange PVC-U JIS
G70	Backing Flange PVC-U ISO
G70150	Backing Flange PVC-U ISO d160 DN150
G71	Backing Flange PVC-U ANSI
G71150	Backing Flange PVC-U ANSI 6" DN150
G72PVCU	Backing Flange PP-Stahl ISO with PVC-U Endings
G72PVCU150	Backing Fl. PP-Steel ISO d160 DN150 with PVC-U Endings
G73PVCU	PVCU Backing Flange PP-Stahl ANSI with PVC-U Endings
G73PVCU150	PVCU150 Backing Fl. PP-Steel ANSI 6" DN150 with PVC-U Endings
G78PVCU	PVCU Backing Flange PVC-U JIS with PVC-U Endings
G78PVCU150	PVCU150 Backing Fl. PVC-U JIS d160 DN150 with PVC-U Endings
G80 PVC-U	PVC-U Valve End blank

Mounting plate

L02	With Mounting Plate

Multi-Functional Module (MFM)

I01	Standard Interface
I02	Empty Multi-Functional Module
I03	Multi-Functional Module with 2 Limit Switches Ag, Ni
I04	Multi-Functional Module with 2 Limit Switches Au
I05	Multi-Functional Module with 2 Inductive Switches Namur
I06	Multi-Functional Module with 2 Inductive Switches PNP
I07	Multi-Functional Module with 2 Inductive Switches NPN

Manual Operation

K01	Standard Lever Red
K02	Standard Lever Black
K11	Multi-Functional/Ratched Lever Red

A01	B01	C08	D01	E01	F02	G01	L02	I01	K01	=



Ball valves electric type 107



Ball valve type 107 PVC-U 100-230V
With manual emergency override
With solvent cement sockets metric

Model:

- Built on with electric actuator EA11
- Voltage 100-230 V, 50-60 Hz
- Control range 90°<)
- Control time 5 s/90°<)
- For easy installation and removal
- Integrated stainless steel mounting inserts

Option:

- Individual configuration of the valve (see diagram)

d (mm)	DN (mm)	PN (bar)	kv-value (Δp=1 bar) (l/min)	EPDM Code	Weight (kg)	FPM Code	Weight (kg)
16	10	10	70	**199 107 002**	2.072	**199 107 012**	2.072
20	15	10	185	**199 107 003**	2.138	**199 107 013**	2.072
25	20	10	350	**199 107 004**	2.231	**199 107 014**	2.232
32	25	10	700	**199 107 005**	2.340	**199 107 015**	2.189
40	32	10	1000	**199 107 006**	2.596	**199 107 016**	2.592
50	40	10	1600	**199 107 007**	2.829	**199 107 017**	2.914
63	50	10	3100	**199 107 008**	3.562	**199 107 018**	2.914

d (mm)	D (mm)	H (mm)	H1 (mm)	H2 (mm)	H3 (mm)	H5 (mm)	L (mm)	L1 (mm)	L2 (mm)	L4 (mm)	L5 (mm)	L6 (mm)	L7 (mm)	L8 (mm)	z (mm)
16	50	200	27	64	64	137	92	161	56	25	77	83	122	33	64
20	50	200	27	64	64	137	95	161	56	25	77	83	122	33	64
25	58	209	30	73	64	137	110	161	65	25	77	83	122	33	72
32	68	209	36	73	64	137	123	161	71	25	77	83	122	33	79
40	84	220	44	84	64	137	146	161	85	45	77	83	122	33	94
50	97	220	51	84	64	137	157	161	89	45	77	83	122	33	95
63	124	243	64	106	64	137	183	161	101	45	77	83	122	33	107

d (mm)	closest inch (inch)
16	⅜
20	½
25	¾
32	1
40	1 ¼
50	1 ½
63	2

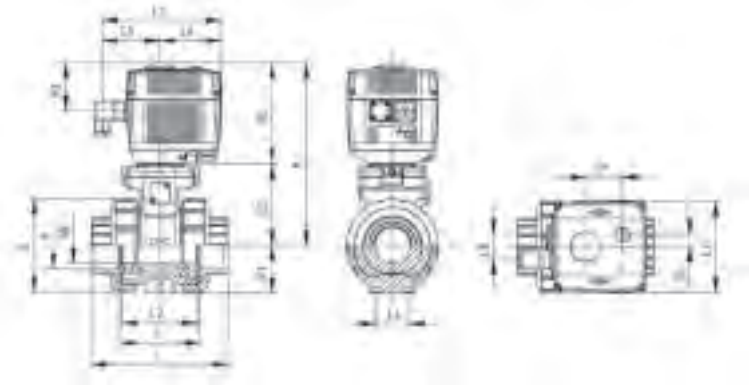



Ball valve type 107 PVC-U 100-230V
With manual emergency override
With solvent cement spigots metric

Model:

- Built on with electric actuator EA11
- Voltage 100-230 V, 50-60 Hz
- Control range 90°<)
- Control time 5 s/90°<)
- For easy installation and removal
- Integrated stainless steel mounting inserts

Option:

- Individual configuration of the valve (see diagram)

d (mm)	DN (mm)	PN (bar)	kv-value (Δp=1 bar) (l/min)	EPDM Code	Weight (kg)	FPM Code	Weight (kg)
16	10	10	70	**199 107 022**	2.072	**199 107 032**	2.072
20	15	10	185	**199 107 023**	2.072	**199 107 033**	2.072
25	20	10	350	**199 107 024**	2.189	**199 107 034**	2.189
32	25	10	700	**199 107 025**	2.189	**199 107 035**	2.189
40	32	10	1000	**199 107 026**	2.603	**199 107 036**	2.592
50	40	10	1600	**199 107 027**	2.914	**199 107 037**	2.914
63	50	10	3100	**199 107 028**	3.772	**199 107 038**	3.772

d (mm)	D (mm)	H (mm)	H1 (mm)	H2 (mm)	H3 (mm)	H5 (mm)	L (mm)	L1 (mm)	L2 (mm)	L3 (mm)	L4 (mm)	L5 (mm)	L6 (mm)	L7 (mm)	L8 (mm)
16	50	200	27	64	64	137	114	161	56	130	25	77	83	122	33
20	50	200	27	64	64	137	124	161	56	130	25	77	83	122	33
25	58	209	30	73	64	137	144	161	65	150	25	77	83	122	33
32	68	209	36	73	64	137	154	161	71	160	25	77	83	122	33
40	84	220	44	84	64	137	174	161	85	180	45	77	83	122	33
50	97	220	51	84	64	137	194	161	89	200	45	77	83	122	33
63	124	243	64	106	64	137	224	161	101	230	45	77	83	122	33

d (mm)	closest inch (inch)
16	⅜
20	½
25	¾
32	1
40	1 ¼
50	1 ½
63	2

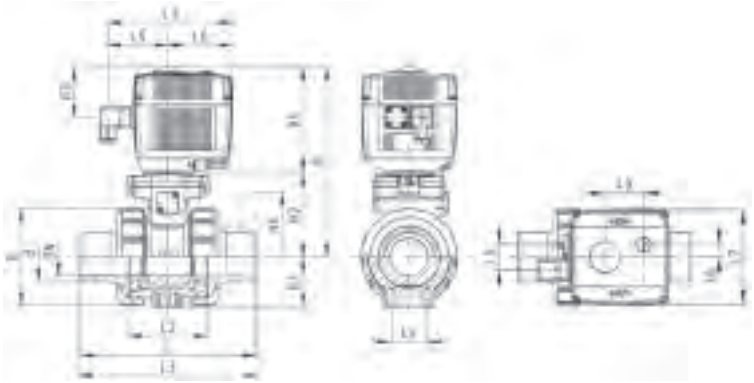



Ball valve type 107 PVC-U 100-230V
With manual emergency override
With threaded sockets Rp

Model:

- Built on with electric actuator EA11
- Voltage 100-230 V, 50-60 Hz
- Control range 90°<)
- Control time 5 s/90°<)
- For easy installation and removal
- Integrated stainless steel mounting inserts

Option:

- Individual configuration of the valve (see diagram)

Rp (inch)	DN (mm)	PN (bar)	kv-value (Δp=1 bar) (l/min)	EPDM Code	Weight (kg)	FPM Code	Weight (kg)
⅜	10	10	70	**199 107 622**	2.100	**199 107 632**	2.100
½	15	10	185	**199 107 623**	2.100	**199 107 633**	2.100
¾	20	10	350	**199 107 624**	2.232	**199 107 634**	2.200
1	25	10	700	**199 107 625**	2.300	**199 107 635**	2.300
1 ¼	32	10	1000	**199 107 626**	2.592	**199 107 636**	2.600
1 ½	40	10	1600	**199 107 627**	2.914	**199 107 637**	3.000
2	50	10	3100	**199 107 628**	3.772	**199 107 638**	3.800

Rp (inch)	D (mm)	H (mm)	H1 (mm)	H2 (mm)	H3 (mm)	H5 (mm)	L (mm)	L1 (mm)	L2 (mm)	L4 (mm)	L5 (mm)	L6 (mm)	L7 (mm)	L8 (mm)	z (mm)
⅜	50	200	27	64	64	137	92	161	56	25	77	83	122	33	64
½	50	200	27	64	64	137	95	161	56	25	77	83	122	33	64
¾	58	209	30	73	64	137	110	161	65	25	77	83	122	33	72
1	68	209	36	73	64	137	123	161	71	25	77	83	122	33	79
1 ¼	84	220	44	84	64	137	146	161	85	45	77	83	122	33	94
1 ½	97	220	51	84	64	137	157	161	89	45	77	83	122	33	95
2	124	243	64	106	64	137	183	161	101	45	77	83	122	33	107

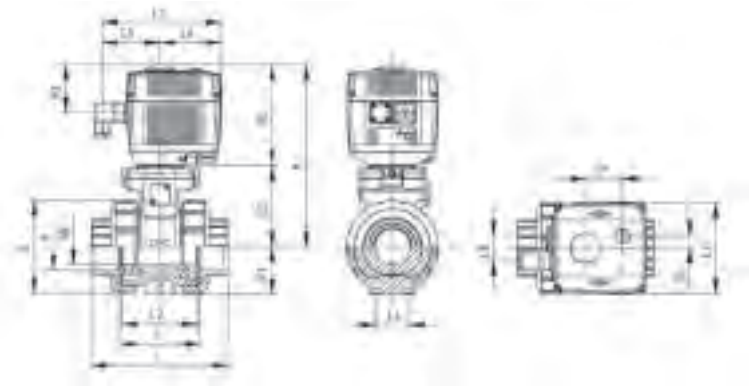



Ball valve type 107 PVC-U 100-230V
With manual emergency override
With fixed flanges serrated metric

Model:

- Built on with electric actuator EA11
- Voltage 100-230 V, 50-60 Hz
- Control range 90°<)
- Control time 5 s/90°<)
- For easy installation and removal
- Integrated stainless steel mounting inserts
- Overall length according to EN 558
- Connecting dimension: ISO 7005 / EN 1092 / DIN 25 PN10 / BS4504

Option:

- Individual configuration of the valve (see diagram)

d (mm)	Size (inch)	DN (mm)	PN (bar)	kv-value (Δp=1 bar) (l/min)	EPDM Code	Weight (kg)	FPM Code	Weight (kg)
20	½	15	10	185	**199 107 603**	2.300	**199 107 613**	2.300
25	¾	20	10	350	**199 107 604**	2.500	**199 107 614**	2.500
32	1	25	10	700	**199 107 605**	2.717	**199 107 615**	2.700
40	1 ¼	32	10	1000	**199 107 606**	3.200	**199 107 616**	3.200
50	1 ½	40	10	1600	**199 107 607**	3.700	**199 107 617**	3.700
63	2	50	10	3100	**199 107 608**	4.676	**199 107 618**	4.776

d (mm)	D (mm)	H (mm)	H1 (mm)	H2 (mm)	H3 (mm)	H5 (mm)	H6 (mm)	L (mm)	L1 (mm)	L2 (mm)	L3 (mm)	L4 (mm)	L5 (mm)	L6 (mm)	L7 (mm)
20	50	201	27	64	65	138	48	124	160	56	130	25	77	83	122
25	58	210	30	73	65	138	53	144	160	65	150	25	77	83	122
32	68	210	36	73	65	138	58	154	160	71	160	25	77	83	122
40	84	221	44	84	65	138	70	174	160	85	180	45	77	83	122
50	97	221	51	84	65	138	75	194	160	89	200	45	77	83	122
63	124	244	64	106	65	138	83	224	160	101	230	45	77	83	122

d (mm)	L8 (mm)
20	33
25	33
32	33
40	33
50	33
63	33

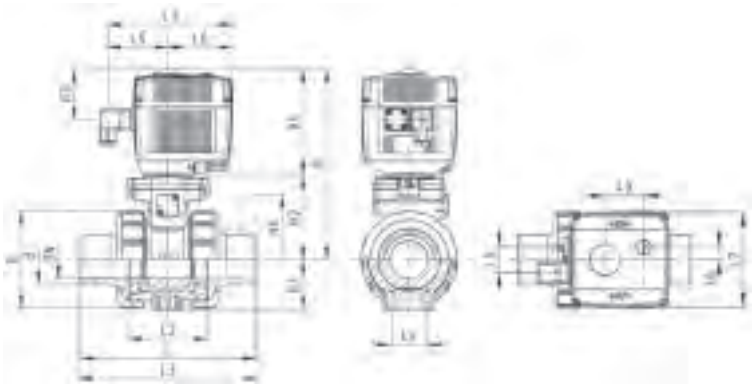



Ball valve type 107 PVC-U 24V
With manual emergency override
With solvent cement sockets metric

Model:

- Built on with electric actuator EA11
- Voltage 24 V AC/DC
- Control range 90°<)
- Control time 5 s/90°<)
- For easy installation and removal
- Integrated stainless steel mounting inserts

Option:

- Individual configuration of the valve (see diagram)

d (mm)	DN (mm)	PN (bar)	kv-value (Δp=1 bar) (l/min)	EPDM Code	Weight (kg)	FPM Code	Weight (kg)
16	10	10	70	**199 107 042**	2.122	**199 107 052**	2.072
20	15	10	185	**199 107 043**	2.122	**199 107 053**	2.125
25	20	10	350	**199 107 044**	2.216	**199 107 054**	2.860
32	25	10	700	**199 107 045**	2.321	**199 107 055**	2.189
40	32	10	1000	**199 107 046**	3.831	**199 107 056**	2.592
50	40	10	1600	**199 107 047**	2.809	**199 107 057**	3.437
63	50	10	3100	**199 107 048**	3.547	**199 107 058**	3.772

d (mm)	D (mm)	H (mm)	H1 (mm)	H2 (mm)	H3 (mm)	H5 (mm)	L (mm)	L1 (mm)	L2 (mm)	L4 (mm)	L5 (mm)	L6 (mm)	L7 (mm)	L8 (mm)	z (mm)
16	50	200	27	64	64	137	92	161	56	25	77	83	122	33	64
20	50	200	27	64	64	137	95	161	56	25	77	83	122	33	64
25	58	209	30	73	64	137	110	161	65	25	77	83	122	33	72
32	68	209	36	73	64	137	123	161	71	25	77	83	122	33	79
40	84	220	44	84	64	137	146	161	85	45	77	83	122	33	94
50	97	220	51	84	64	137	157	161	89	45	77	83	122	33	95
63	124	243	64	106	64	137	183	161	101	45	77	83	122	33	107

d (mm)	closest inch (inch)
16	⅜
20	½
25	¾
32	1
40	1 ¼
50	1 ½
63	2

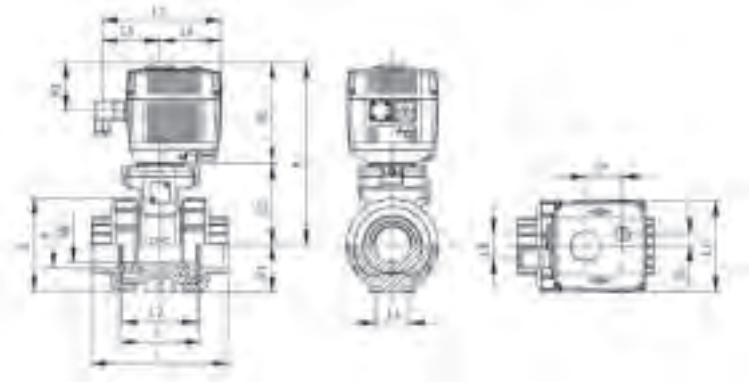



Ball valve type 107 PVC-U 24V
With manual emergency override
With solvent cement spigots metric

Model:

- Built on with electric actuator EA11
- Voltage 24 V AC/DC
- Control range 90°<)
- Control time 5 s/90°<)
- For easy installation and removal
- Integrated stainless steel mounting inserts

Option:

- Individual configuration of the valve (see diagram)

d (mm)	DN (mm)	PN (bar)	kv-value (Δp=1 bar) (l/min)	EPDM Code	Weight (kg)	FPM Code	Weight (kg)
16	10	10	70	**199 107 062**	2.072	**199 107 072**	2.072
20	15	10	185	**199 107 063**	2.072	**199 107 073**	1.830
25	20	10	350	**199 107 064**	2.387	**199 107 074**	2.189
32	25	10	700	**199 107 065**	2.189	**199 107 075**	2.189
40	32	10	1000	**199 107 066**	2.592	**199 107 076**	2.592
50	40	10	1600	**199 107 067**	2.914	**199 107 077**	2.914
63	50	10	3100	**199 107 068**	3.772	**199 107 078**	3.772

d (mm)	D (mm)	H (mm)	H1 (mm)	H2 (mm)	H3 (mm)	H5 (mm)	L (mm)	L1 (mm)	L2 (mm)	L3 (mm)	L4 (mm)	L5 (mm)	L6 (mm)	L7 (mm)	L8 (mm)
16	50	200	27	64	64	137	114	161	56	130	25	77	83	122	33
20	50	200	27	64	64	137	124	161	56	130	25	77	83	122	33
25	58	209	30	73	64	137	144	161	65	150	25	77	83	122	33
32	68	209	36	73	64	137	154	161	71	160	25	77	83	122	33
40	84	220	44	84	64	137	174	161	85	180	45	77	83	122	33
50	97	220	51	84	64	137	194	161	89	200	45	77	83	122	33
63	124	243	64	106	64	137	224	161	101	230	45	77	83	122	33

d (mm)	closest inch (inch)
16	⅜
20	½
25	¾
32	1
40	1 ¼
50	1 ½
63	2

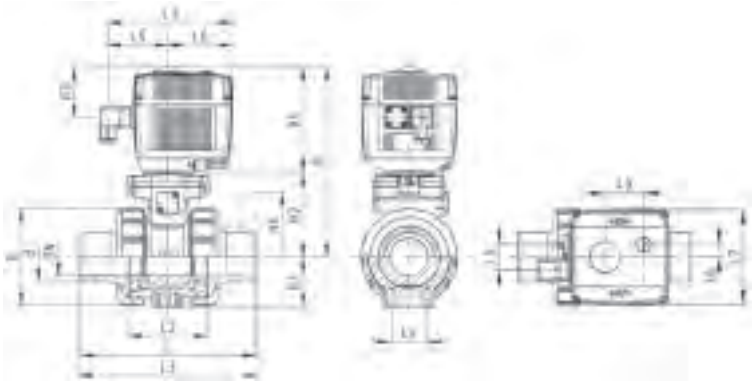



Ball valve type 107 PVC-U 24V
With manual emergency override
With threaded sockets Rp

Model:

- Built on with electric actuator EA11
- Voltage 24 V AC/DC
- Control range 90°<)
- Control time 5 s/90°<)
- For easy installation and removal
- Integrated stainless steel mounting inserts

Option:

- Individual configuration of the valve (see diagram)

Rp (inch)	DN (mm)	PN (bar)	kv-value (Δp=1 bar) (l/min)	EPDM Code	Weight (kg)	FPM Code	Weight (kg)
⅜	10	10	70	**199 107 662**	2.135	**199 107 672**	2.100
½	15	10	185	**199 107 663**	2.100	**199 107 673**	2.100
¾	20	10	350	**199 107 664**	2.200	**199 107 674**	2.200
1	25	10	700	**199 107 665**	2.327	**199 107 675**	2.300
1 ¼	32	10	1000	**199 107 666**	2.600	**199 107 676**	2.600
1 ½	40	10	1600	**199 107 667**	2.837	**199 107 677**	3.000
2	50	10	3100	**199 107 668**	3.602	**199 107 678**	3.800

Rp (inch)	D (mm)	H (mm)	H1 (mm)	H2 (mm)	H3 (mm)	H5 (mm)	L (mm)	L1 (mm)	L2 (mm)	L4 (mm)	L5 (mm)	L6 (mm)	L7 (mm)	L8 (mm)	z (mm)
⅜	50	200	27	64	64	137	92	161	56	25	77	83	122	33	64
½	50	200	27	64	64	137	95	161	56	25	77	83	122	33	64
¾	58	209	30	73	64	137	110	161	65	25	77	83	122	33	72
1	68	209	36	73	64	137	123	161	71	25	77	83	122	33	79
1 ¼	84	220	44	84	64	137	146	161	85	45	77	83	122	33	94
1 ½	97	220	51	84	64	137	157	161	89	45	77	83	122	33	95
2	124	243	64	106	64	137	183	161	101	45	77	83	122	33	107

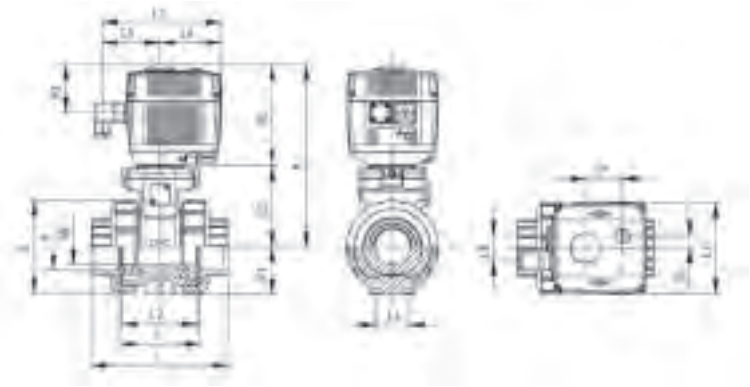



Ball valve type 107 PVC-U 24V
With manual emergency override
With fixed flanges serrated metric

Model:

- Built on with electric actuator EA11
- Voltage 24 V AC/DC
- Control range 90°<)
- Control time 5 s/90°<)
- For easy installation and removal
- Integrated stainless steel mounting inserts
- Overall length according to EN 558
- Connecting dimension: ISO 7005 / EN 1092 / DIN 25 PN10 / BS4504

Option:

- Individual configuration of the valve (see diagram)

d (mm)	Size (inch)	DN (mm)	PN (bar)	kv-value (Δp=1 bar) (l/min)	EPDM Code	Weight (kg)	FPM Code	Weight (kg)
20	½	15	10	185	**199 107 643**	2.300	**199 107 653**	2.300
25	¾	20	10	350	**199 107 644**	2.500	**199 107 654**	2.500
32	1	25	10	700	**199 107 645**	2.700	**199 107 655**	2.700
40	1 ¼	32	10	1000	**199 107 646**	3.200	**199 107 656**	3.200
50	1 ½	40	10	1600	**199 107 647**	4.216	**199 107 657**	3.700
63	2	50	10	3100	**199 107 648**	4.663	**199 107 658**	4.800

d (mm)	D (mm)	H (mm)	H1 (mm)	H2 (mm)	H3 (mm)	H5 (mm)	H6 (mm)	L (mm)	L1 (mm)	L2 (mm)	L3 (mm)	L4 (mm)	L5 (mm)	L6 (mm)	L7 (mm)
20	50	201	27	64	65	138	48	124	160	56	130	25	77	83	122
25	58	210	30	73	65	138	53	144	160	65	150	25	77	83	122
32	68	210	36	73	65	138	58	154	160	71	160	25	77	83	122
40	84	221	44	84	65	138	70	174	160	85	180	45	77	83	122
50	97	221	51	84	65	138	75	194	160	89	200	45	77	83	122
63	124	244	64	106	65	138	83	224	160	101	230	45	77	83	122

d (mm)	L8 (mm)
20	33
25	33
32	33
40	33
50	33
63	33

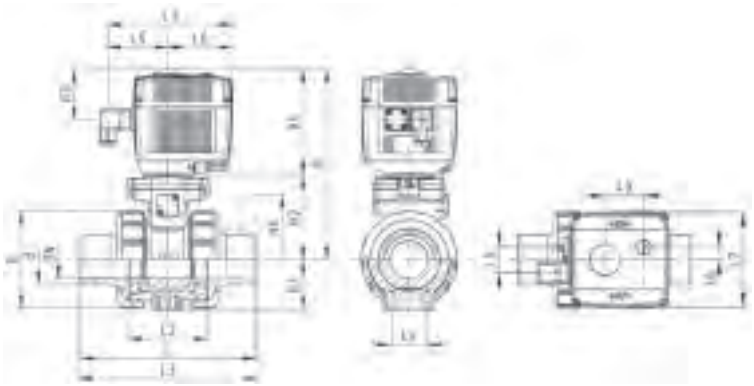

Ball valves electric type 179





Ball valve type 179 PVC-U 100-230V
With manual emergency override
With solvent cement sockets metric

Model:

- Voltage 100-230 V, 50-60 Hz
- Factory set control range 90°<)
- Heating element, position feedback (Open/Close/ Middle)
- Integrated stainless steel mounting inserts

Option:

- Other valve and actuator configurations available
- Optional accessories: Fail-safe return unit, Monitoring board, Position controller, Profibus DP board

d (mm)	DN (mm)	PN (bar)	kv-value (Δp=1 bar) (l/min)	EA	EPDM Code	Weight (kg)	FPM Code	Weight (kg)
16	10	10	70	EA25	**199 179 002**	2.100	**199 179 012**	2.100
20	15	10	185	EA25	**199 179 003**	2.462	**199 179 013**	2.100
25	20	10	350	EA25	**199 179 004**	2.563	**199 179 014**	2.200
32	25	10	700	EA25	**199 179 005**	2.300	**199 179 015**	2.300
40	32	10	1000	EA25	**199 179 006**	2.692	**199 179 016**	2.600
50	40	10	1600	EA25	**199 179 007**	3.154	**199 179 017**	3.168
63	50	10	3100	EA25	**199 179 008**	3.888	**199 179 018**	3.800
75	65	10	5000	EA45	**199 179 009**	7.631	**199 179 019**	7.400
90	80	10	7000	EA45	**199 179 010**	9.800	**199 179 020**	9.800
110	100	10	11000	EA120	**199 179 011**	14.791	**199 179 021**	14.100

d (mm)	D (mm)	H (mm)	H1 (mm)	H2 (mm)	H3 (mm)	H5 (mm)	L (mm)	L1 (mm)	L2 (mm)	L4 (mm)	L5 (mm)	L7 (mm)	z (mm)	closest inch (inch)
16	50	231	27	64	94	167	92	180	56	25	97	122	64	⅜
20	50	231	27	64	94	167	95	180	56	25	97	122	64	½
25	58	240	30	73	94	167	110	180	65	25	97	122	72	¾
32	68	240	36	73	94	167	123	180	71	25	97	122	79	1
40	84	251	44	84	94	167	146	180	85	45	97	122	94	1 ¼
50	97	251	51	84	94	167	157	180	89	45	97	122	95	1 ½
63	124	273	64	106	94	167	183	180	101	45	97	122	107	2
75	166	346	85	156	94	190	233	180	136	70	98	122	144	2 ½
90	200	358	105	168	94	190	254	180	141	70	98	122	151	3
110	238	365	123	175	94	190	301	180	164	120	98	122	174	4

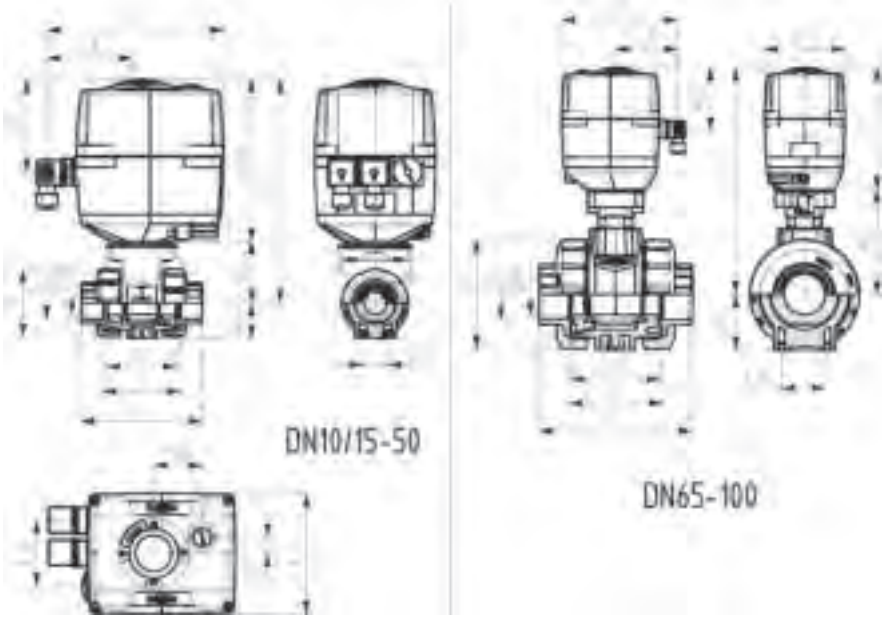



Ball valve type 179 PVC-U 100-230V
With manual emergency override
With backing flanges PP-st metric

Model:

- Voltage 100-230 V, 50-60 Hz
- Factory set control range 90°<)
- Heating element, position feedback (Open/Close/ Middle)
- Integrated stainless steel mounting inserts

Option:

- Other valve and actuator configurations available

d (mm)	DN (mm)	PN (bar)	kv-value (Δp=1 bar) (l/min)	EA	EPDM Code	Weight (kg)	FPM Code	Weight (kg)
75	65	10	5000	EA45	**199 179 349**	10.749	**199 179 359**	11.500
90	80	10	7000	EA45	**199 179 350**	14.900	**199 179 360**	14.900
110	100	10	11000	EA120	**199 179 351**	20.900	**199 179 361**	20.900

d (mm)	D (mm)	H (mm)	H1 (mm)	H2 (mm)	H3 (mm)	H5 (mm)	H6 (mm)	L (mm)	L1 (mm)	L2 (mm)	L3 (mm)	L4 (mm)	L5 (mm)	L6 (mm)	L7 (mm)
75	166	346	85	156	94	190	93	284	180	136	290	70	98	83	122
90	200	358	105	168	94	190	100	300	180	141	310	70	98	83	122
110	238	365	123	175	94	190	110	340	180	164	350	120	98	83	122

d (mm)	L8 (mm)
75	66
90	66
110	66

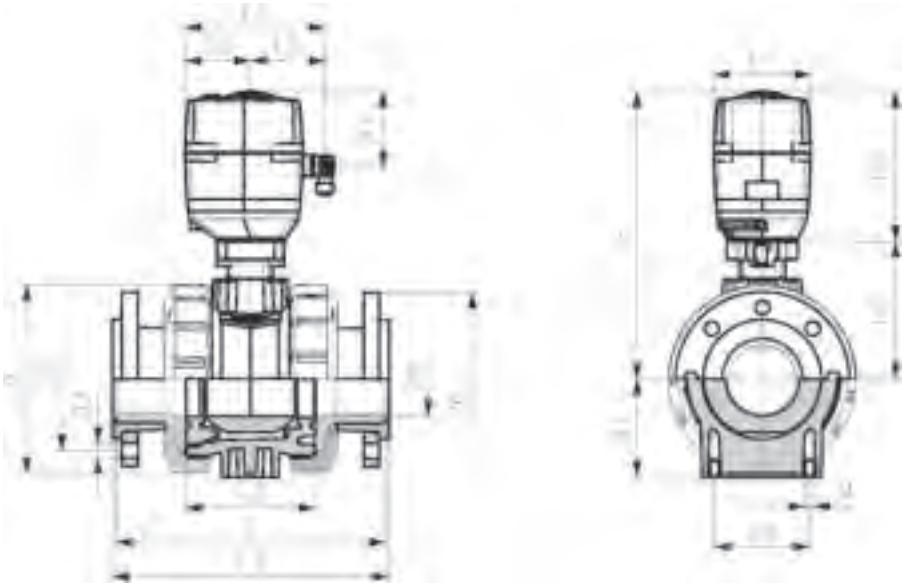





Ball valve type 179 PVC-U 24V
With manual emergency override
With solvent cement sockets metric

Model:

- Voltage 24 V AC/DC
- Factory set control range 90°<)
- Heating element, position feedback (Open/Close/ Middle)
- Integrated stainless steel mounting inserts

Option:

- Other valve and actuator configurations available
- Optional accessories: Fail-safe return unit, Monitoring board, Position controller, Profibus DP board

d (mm)	DN (mm)	PN (bar)	kv-value (Δp=1 bar) (l/min)	EA	EPDM Code	Weight (kg)	FPM Code	Weight (kg)
16	10	10	70	EA25	**199 179 042**	3.112	**199 179 052**	2.100
20	15	10	185	EA25	**199 179 043**	2.447	**199 179 053**	2.100
25	20	10	350	EA25	**199 179 044**	2.542	**199 179 054**	2.543
32	25	10	700	EA25	**199 179 045**	2.645	**199 179 055**	2.647
40	32	10	1000	EA25	**199 179 046**	2.905	**199 179 056**	2.600
50	40	10	1600	EA25	**199 179 047**	3.000	**199 179 057**	3.144
63	50	10	3100	EA25	**199 179 048**	3.880	**199 179 058**	3.886
75	65	10	5000	EA45	**199 179 049**	7.531	**199 179 059**	7.400
90	80	10	7000	EA45	**199 179 050**	9.800	**199 179 060**	9.800
110	100	10	11000	EA120	**199 179 051**	14.100	**199 179 061**	14.100

d (mm)	D (mm)	H (mm)	H1 (mm)	H2 (mm)	H3 (mm)	H5 (mm)	L (mm)	L1 (mm)	L2 (mm)	L4 (mm)	L5 (mm)	L7 (mm)	z (mm)	closest inch (inch)
16	50	231	27	64	94	167	92	180	56	25	97	122	64	⅜
20	50	231	27	64	94	167	95	180	56	25	97	122	64	½
25	58	240	30	73	94	167	110	180	65	25	97	122	72	¾
32	68	240	36	73	94	167	123	180	71	25	97	122	79	1
40	84	251	44	84	94	167	146	180	85	45	97	122	94	1 ¼
50	97	251	51	84	94	167	157	180	89	45	97	122	95	1 ½
63	124	273	64	106	94	167	183	180	101	45	97	122	107	2
75	166	347	85	156	94	190	233	180	136	70	98	122	144	2 ½
90	200	358	105	168	94	190	254	180	141	70	98	122	151	3
110	238	365	123	175	94	190	301	180	164	120	98	122	174	4

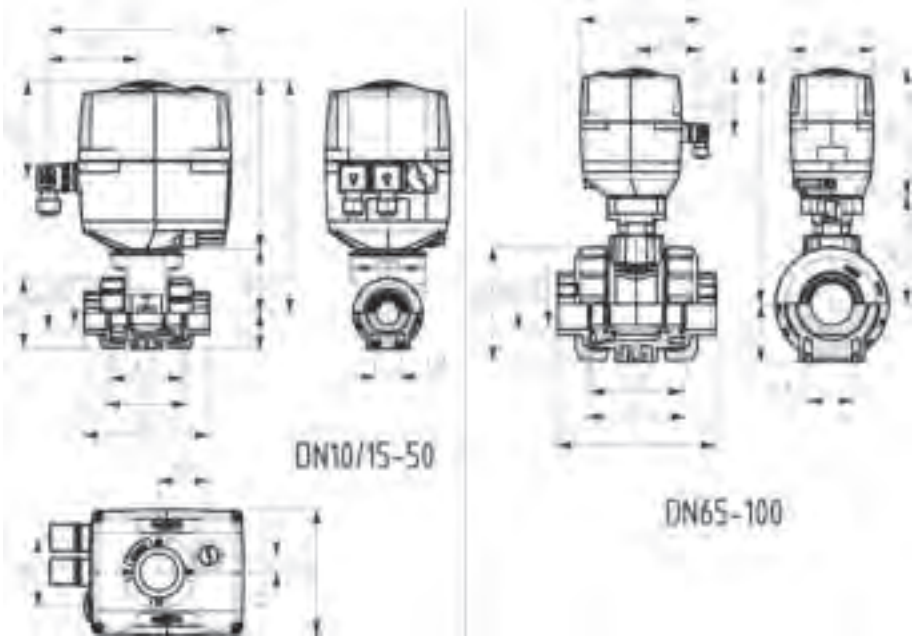

Ball valves electric type 104

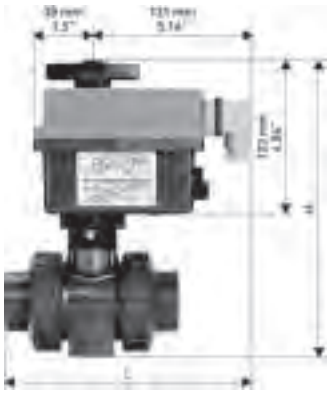

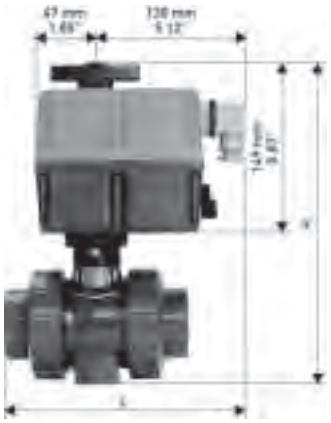

Ball valve type 104 PVC-U 100-230V
With solvent cement sockets metric

Model:

- Voltage 100-230 V, 50-60 Hz
- Control range 90°<)
- For easy installation and removal
- Integrated stainless steel mounting inserts

d (mm)	DN (mm)	PN (bar)	kv-value (Δp=1 bar) (l/min)	EPDM Code	Weight (kg)	FPM Code
16	10	10	70	**199 104 002**	0.995	**199 104 012**
20	15	10	185	**199 104 003**	0.995	**199 104 013**
25	20	10	350	**199 104 004**	1.050	**199 104 014**
32	25	10	700	**199 104 005**	1.120	**199 104 015**
40	32	10	1000	**199 104 006**	1.290	**199 104 016**
50	40	10	1600	**199 104 007**	2.010	**199 104 017**
63	50	10	3100	**199 104 008**	2.395	**199 104 018**

d (mm)	H (mm)	L (mm)	Type of actuator	B (mm)
16	194	178.5	10Nm	50
20	194	178.5	10Nm	50
25	207	186.0	10Nm	58
32	217	192.5	10Nm	68
40	236	204.5	10Nm	84
50	275	208.5	20Nm	97
63	307	221.5	20Nm	124

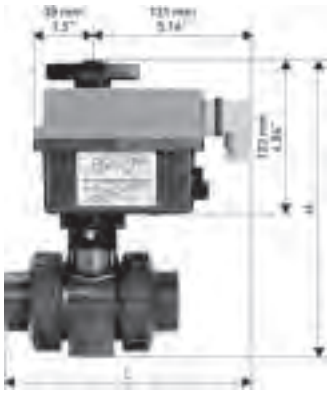

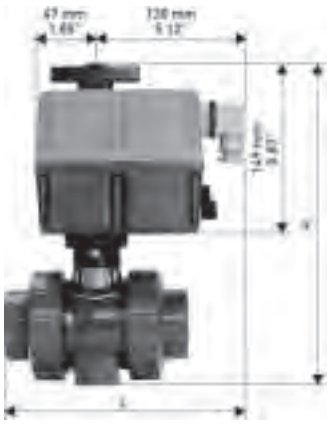

Ball valve type 104 PVC-U 24V
With solvent cement sockets metric

Model:

- Voltage 24 V AC/DC
- Control range 90°<)
- For easy installation and removal
- Integrated stainless steel mounting inserts

d (mm)	DN (mm)	PN (bar)	kv-value (Δp=1 bar) (l/min)	EPDM Code	Weight (kg)	FPM Code
16	10	10	70	**199 104 042**	0.995	**199 104 052**
20	15	10	185	**199 104 043**	0.995	**199 104 053**
25	20	10	350	**199 104 044**	1.050	**199 104 054**
32	25	10	700	**199 104 045**	1.120	**199 104 055**
40	32	10	1000	**199 104 046**	1.290	**199 104 056**
50	40	10	1600	**199 104 047**	2.010	**199 104 057**
63	50	10	3100	**199 104 048**	2.395	**199 104 058**

d (mm)	H (mm)	L (mm)	Type of actuator	B (mm)
16	194	178.5	10Nm	50
20	194	178.5	10Nm	50
25	207	186.0	10Nm	58
32	217	192.5	10Nm	68
40	236	204.5	20Nm	84
50	275	208.5	20Nm	97
63	307	221.5	20Nm	124

Product Configurator

Create your own actuator

Electric Actuator

T01	EA 11 24V with Cable Plug
T02	EA 11 100-230V with Cable Plug
T07	EA 25 24V with Cable Plug
T08	EA 25 100-230V with Cable Plug
T09	EA 120 24V with Cable Plug
T10	EA 120 100-230V with Cable Plug
T11	EA 250 24V with Cable Plug
T12	EA 250 100-230V with Cable Plug



Angle (Open/ Close)

W45	45°
W90	90°
W180	180°

Middle Position

W17	No
W18	Yes



Colour Assignment Feedback

W20	Open = rot
W21	Open= grün

Position Feedback

W23	Open/ Close
W24	Open/ Close/ Middle
W25	Middle



Wiring Feedback

W26	NC
W28	NO

Heating Threshold

W29	5°
...	[5°steps]
W37	45°

Failsafe Return uni

W39	Integrated (Battery powered)
W40	External (no Battery - 24V needed)



Accessory

W42	Positioner
W43	Monitoring
W44	Profibus

Setting Positioner

W46	BCD = 0
...	
W55	BCD = 9

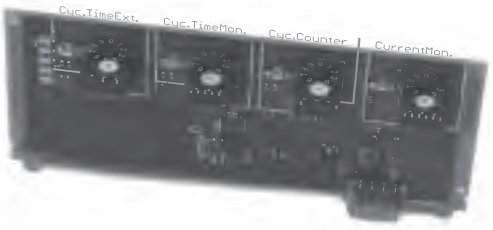

Setting Motor Current

W56	BCD = 0
...	
W65	BCD = 9

Setting Cycle Time

W66	BCD = 0
...	
W75	BCD = 9

Setting Cycle Time Monitoring

W76	BCD = 0
...	
W85	BCD = 9



Setting Cycle Counter

W86	BCD = 0
...	
W96	BCD = 9

T08	W90	W17	W20	W23	W26	W29	W39	W42	W46	W65	-	-	-	=

Ball valves pneumatic type 230



Ball valve type 230 PVC-U FC (Fail safe to close)
With manual override
With solvent cement sockets metric

Model:

- Built on with pneumatic actuator PA11 (DN10/15-25), PA21 (DN32-50)
- Control time 90°<) 1-2s
- For easy installation and removal
- Integrated stainless steel mounting inserts

Option:

- Individual configuration of the valve (see diagram)

d (mm)	DN (mm)	PN (bar)	kv-value (Δp=1 bar) (l/min)	EPDM Code	Weight (kg)	FPM Code	Weight (kg)
16	10	10	70	**199 230 002**	1.459	**199 230 012**	1.459
20	15	10	185	**199 230 003**	1.459	**199 230 013**	1.459
25	20	10	350	**199 230 004**	1.576	**199 230 014**	1.576
32	25	10	700	**199 230 005**	1.454	**199 230 015**	1.474
40	32	10	1000	**199 230 006**	2.436	**199 230 016**	2.443
50	40	10	1600	**199 230 007**	2.664	**199 230 017**	2.670
63	50	10	3100	**199 230 008**	4.364	**199 230 018**	3.419

d (mm)	D (mm)	H (mm)	H1 (mm)	H2 (mm)	H3 (mm)	H4 (mm)	H5 (mm)	L (mm)	L1 (mm)	L2 (mm)	L4 (mm)	L5 (mm)	L6 (mm)	L7 (mm)	z (mm)
16	50	230	27	62	168	40	77	92	194	56	25	261	76	48	64
20	50	230	27	62	168	40	77	95	194	56	25	261	76	48	64
25	58	239	30	71	168	40	77	110	194	65	25	261	76	48	72
32	68	239	36	71	168	40	77	123	194	71	25	261	76	48	79
40	84	271	44	84	187	51	99	146	224	85	45	305	95	59	94
50	97	271	51	84	187	51	99	157	224	89	45	305	95	59	95
63	124	293	64	106	187	51	99	183	224	101	45	305	95	59	107

d (mm)	closest inch (inch)
16	⅜
20	½
25	¾
32	1
40	1 ¼
50	1 ½
63	2

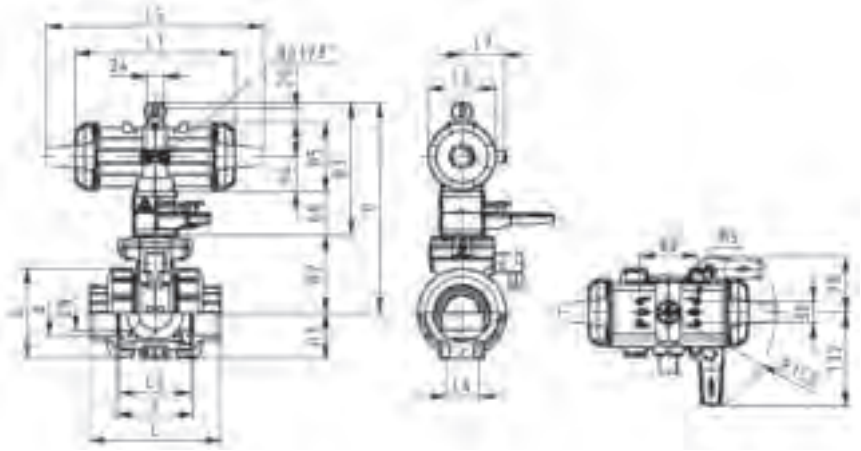



DN10/15 - 50



DN10/15 - 50

Ball valve type 230 PVC-U FC (Fail safe to close)
With manual override
With solvent cement spigots metric

Model:

- Built on with pneumatic actuator PA11 (DN10/15-25), PA21 (DN32-50)
- Control time 90°<) 1-2s
- For easy installation and removal
- Integrated stainless steel mounting inserts

Option:

- Individual configuration of the valve (see diagram)

d (mm)	DN (mm)	PN (bar)	kv-value (Δp=1 bar) (l/min)	EPDM Code	Weight (kg)	FPM Code	Weight (kg)
16	10	10	70	**199 230 022**	1.459	**199 230 032**	1.459
20	15	10	185	**199 230 023**	1.459	**199 230 033**	1.459
25	20	10	350	**199 230 024**	1.576	**199 230 034**	1.576
32	25	10	700	**199 230 025**	1.700	**199 230 035**	1.700
40	32	10	1000	**199 230 026**	2.751	**199 230 036**	2.751
50	40	10	1600	**199 230 027**	3.073	**199 230 037**	3.073
63	50	10	3100	**199 230 028**	3.931	**199 230 038**	3.931

d (mm)	D (mm)	H (mm)	H1 (mm)	H2 (mm)	H3 (mm)	H4 (mm)	H5 (mm)	L (mm)	L1 (mm)	L2 (mm)	L3 (mm)	L4 (mm)	L5 (mm)	L6 (mm)	L7 (mm)
16	50	159	27	62	168	40	77	114	194	56	130	25	261	76	48
20	50	159	27	62	168	40	77	124	194	56	130	25	261	76	48
25	58	168	30	71	168	40	77	144	194	65	150	25	261	76	48
32	68	168	36	71	168	40	77	154	194	71	160	25	261	76	48
40	84	202	44	84	187	51	99	174	224	85	180	45	305	95	59
50	97	202	51	84	187	51	99	194	224	89	200	45	305	95	59
63	124	225	64	106	187	51	99	224	224	101	230	45	305	95	59

d (mm)	closest inch (inch)
16	⅜
20	½
25	¾
32	1
40	1 ¼
50	1 ½
63	2

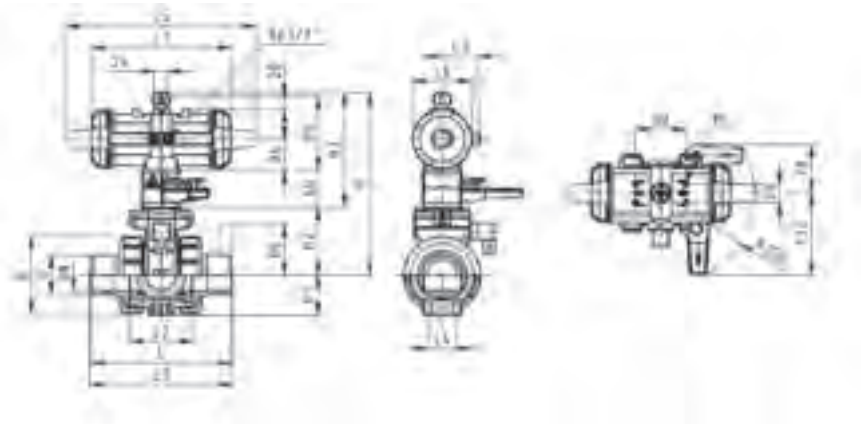



Ball valve type 230 PVC-U FC (Fail safe to close)
With manual override
With threaded sockets Rp

Model:

- Built on with pneumatic actuator PA11 (DN10/15-25), PA21 (DN32-50)
- Control time 90°<) 1-2s
- For easy installation and removal
- Integrated stainless steel mounting inserts

Option:

- Individual configuration of the valve (see diagram)

Rp (inch)	DN (mm)	PN (bar)	kv-value (Δp=1 bar) (l/min)	EPDM Code	Weight (kg)	FPM Code	Weight (kg)
⅜	10	10	70	**199 230 362**	1.500	**199 230 372**	1.500
½	15	10	185	**199 230 363**	1.500	**199 230 373**	1.500
¾	20	10	350	**199 230 364**	1.369	**199 230 374**	1.600
1	25	10	700	**199 230 365**	1.700	**199 230 375**	1.700
1 ¼	32	10	1000	**199 230 366**	2.800	**199 230 376**	2.800
1 ½	40	10	1600	**199 230 367**	3.100	**199 230 377**	3.100
2	50	10	3100	**199 230 368**	4.000	**199 230 378**	4.000

Rp (inch)	D (mm)	H (mm)	H1 (mm)	H2 (mm)	H3 (mm)	H4 (mm)	H5 (mm)	L (mm)	L1 (mm)	L2 (mm)	L4 (mm)	L5 (mm)	L6 (mm)	L7 (mm)	z (mm)
⅜	50	159	27	62	168	40	77	92	194	56	25	261	76	48	64
½	50	159	27	62	168	40	77	95	194	56	25	261	76	48	64
¾	58	168	30	71	168	40	77	110	194	65	25	261	76	48	72
1	68	168	36	71	168	40	77	123	194	71	25	261	76	48	79
1 ¼	84	202	44	84	187	51	99	146	224	85	45	305	95	59	94
1 ½	97	202	51	84	187	51	99	157	224	89	45	305	95	59	95
2	124	225	64	106	187	51	99	183	224	101	45	305	95	59	107

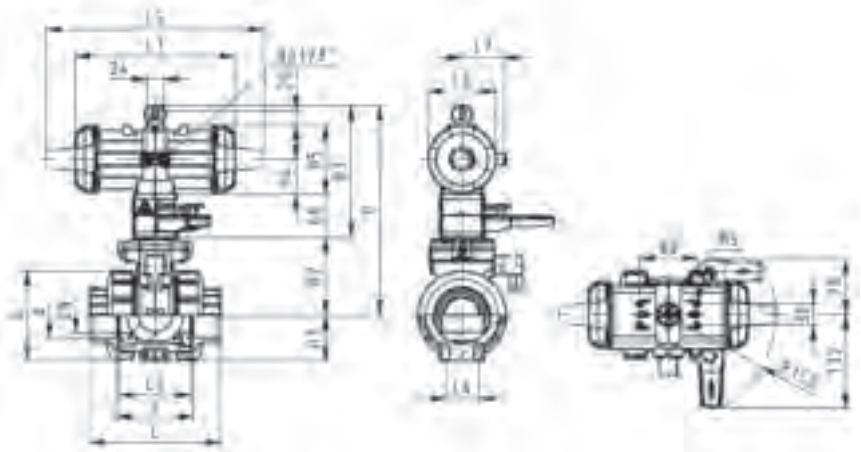



Ball valve type 230 PVC-U FC (Fail safe to close)
With manual override
With fixed flanges serrated metric

Model:

- Built on with pneumatic actuator PA11 (DN10/15-25), PA21 (DN32-50)
- Control time 90°<) 1-2s
- For easy installation and removal
- Integrated stainless steel mounting inserts
- Overall length according to EN 558
- Connecting dimension: ISO 7005 / EN 1092 / DIN 25 PN10 / BS4504

Option:

- Individual configuration of the valve (see diagram)

d (mm)	Size (inch)	DN (mm)	PN (bar)	kv-value (Δp=1 bar) (l/min)	EPDM Code	Weight (kg)	FPM Code	Weight (kg)
20	½	15	10	185	**199 230 243**	1.700	**199 230 253**	1.700
25	¾	20	10	350	**199 230 244**	1.900	**199 230 254**	1.900
32	1	25	10	700	**199 230 245**	1.858	**199 230 255**	2.100
40	1 ¼	32	10	1000	**199 230 246**	3.400	**199 230 256**	3.400
50	1 ½	40	10	1600	**199 230 247**	3.073	**199 230 257**	3.800
63	2	50	10	3100	**199 230 248**	4.900	**199 230 258**	4.900

d (mm)	D (mm)	H (mm)	H1 (mm)	H2 (mm)	H3 (mm)	H4 (mm)	H5 (mm)	H6 (mm)	L (mm)	L1 (mm)	L2 (mm)	L3 (mm)	L4 (mm)	L5 (mm)	L6 (mm)
20	50	230	27	62	168	40	77	48	124	194	56	130	25	261	76
25	58	239	30	71	168	40	77	53	144	194	65	150	25	261	76
32	68	239	36	71	168	40	77	58	154	194	71	160	25	261	76
40	84	271	44	84	187	51	99	70	174	224	85	180	45	305	95
50	97	271	51	84	187	51	99	75	194	224	89	200	45	305	95
63	124	293	64	106	187	51	99	83	224	224	101	230	45	305	95

d (mm)	L7 (mm)
20	48
25	48
32	48
40	59
50	59
63	59

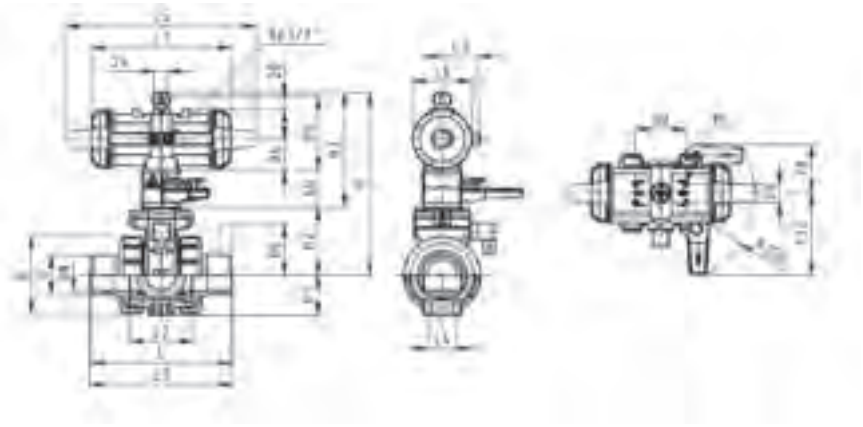



Ball valve type 230 PVC-U FO (Fail safe to open)
With manual override
With solvent cement sockets metric

Model:

- Built on with pneumatic actuator PA11 (DN10/15-25), PA21 (DN32-50)
- Control time 90°<) 1-2s
- For easy installation and removal
- Integrated stainless steel mounting inserts

Option:

- Individual configuration of the valve (see diagram)

d (mm)	DN (mm)	PN (bar)	kv-value (Δp=1 bar) (l/min)	EPDM Code	Weight (kg)	FPM Code	Weight (kg)
16	10	10	70	**199 230 042**	1.459	**199 230 052**	1.459
20	15	10	185	**199 230 043**	1.459	**199 230 053**	1.459
25	20	10	350	**199 230 044**	1.336	**199 230 054**	1.576
32	25	10	700	**199 230 045**	1.700	**199 230 055**	1.700
40	32	10	1000	**199 230 046**	2.751	**199 230 056**	2.751
50	40	10	1600	**199 230 047**	3.073	**199 230 057**	3.073
63	50	10	3100	**199 230 048**	3.360	**199 230 058**	3.931

d (mm)	D (mm)	H (mm)	H1 (mm)	H2 (mm)	H3 (mm)	H4 (mm)	H5 (mm)	L (mm)	L1 (mm)	L2 (mm)	L4 (mm)	L5 (mm)	L6 (mm)	L7 (mm)	z (mm)
16	50	230	27	62	168	40	77	92	194	56	25	261	76	48	64
20	50	230	27	62	168	40	77	95	194	56	25	261	76	48	64
25	58	239	30	71	168	40	77	110	194	65	25	261	76	48	72
32	68	239	36	71	168	40	77	123	194	71	25	261	76	48	79
40	84	271	44	84	187	51	99	146	224	85	45	305	95	59	94
50	97	271	51	84	187	51	99	157	224	89	45	305	95	59	95
63	124	293	64	106	187	51	99	183	224	101	45	305	95	59	107

d (mm)	closest inch (inch)
16	⅜
20	½
25	¾
32	1
40	1 ¼
50	1 ½
63	2

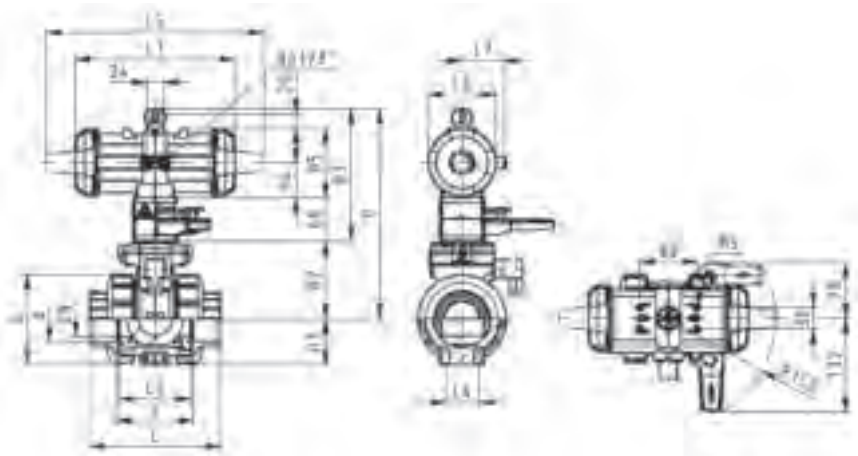



DN10/15 - 50



DN10/15 - 50

Ball valve type 230 PVC-U FO (Fail safe to open)
With manual override
With solvent cement spigots metric

Model:

- Built on with pneumatic actuator PA11 (DN10/15-25), PA21 (DN32-50)
- Control time 90°<) 1-2s
- For easy installation and removal
- Integrated stainless steel mounting inserts

Option:

- Individual configuration of the valve (see diagram)

d (mm)	DN (mm)	PN (bar)	kv-value (Δp=1 bar) (l/min)	EPDM Code	Weight (kg)	FPM Code	Weight (kg)
16	10	10	70	**199 230 062**	1.459	**199 230 072**	1.459
20	15	10	185	**199 230 063**	1.459	**199 230 073**	1.459
25	20	10	350	**199 230 064**	1.576	**199 230 074**	1.576
32	25	10	700	**199 230 065**	1.700	**199 230 075**	1.700
40	32	10	1000	**199 230 066**	2.751	**199 230 076**	2.751
50	40	10	1600	**199 230 067**	3.073	**199 230 077**	3.073
63	50	10	3100	**199 230 068**	3.931	**199 230 078**	3.931

d (mm)	D (mm)	H (mm)	H1 (mm)	H2 (mm)	H3 (mm)	H4 (mm)	H5 (mm)	L (mm)	L1 (mm)	L2 (mm)	L3 (mm)	L4 (mm)	L5 (mm)	L6 (mm)	L7 (mm)
16	50	159	27	62	168	40	77	114	194	56	130	25	261	76	48
20	50	159	27	62	168	40	77	124	194	56	130	25	261	76	48
25	58	168	30	71	168	40	77	144	194	65	150	25	261	76	48
32	68	168	36	71	168	40	77	154	194	71	160	25	261	76	48
40	84	202	44	84	187	51	99	174	224	85	180	45	305	95	59
50	97	202	51	84	187	51	99	194	224	89	200	45	305	95	59
63	124	225	64	106	187	51	99	224	224	101	230	45	305	95	59

d (mm)	closest inch (inch)
16	⅜
20	½
25	¾
32	1
40	1 ¼
50	1 ½
63	2

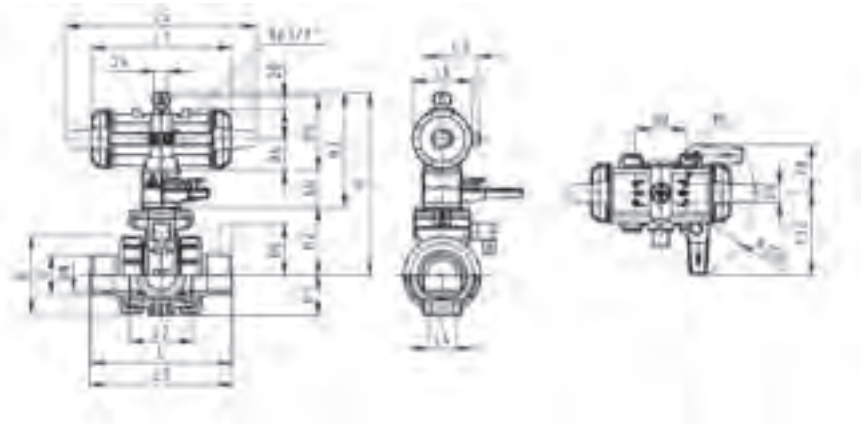



Ball valve type 230 PVC-U FO (Fail safe to open)
With manual override
With threaded sockets Rp

Model:

- Built on with pneumatic actuator PA11 (DN10/15-25), PA21 (DN32-50)
- Control time 90°<) 1-2s
- For easy installation and removal
- Integrated stainless steel mounting inserts

Option:

- Individual configuration of the valve (see diagram)

Rp (inch)	DN (mm)	PN (bar)	kv-value (Δp=1 bar) (l/min)	EPDM Code	Weight (kg)	FPM Code	Weight (kg)
⅜	10	10	70	**199 230 382**	1.500	**199 230 392**	1.500
½	15	10	185	**199 230 383**	1.500	**199 230 393**	1.500
¾	20	10	350	**199 230 384**	1.600	**199 230 394**	1.600
1	25	10	700	**199 230 385**	1.700	**199 230 395**	1.700
1 ¼	32	10	1000	**199 230 386**	2.800	**199 230 396**	2.800
1 ½	40	10	1600	**199 230 387**	3.100	**199 230 397**	3.100
2	50	10	3100	**199 230 388**	4.000	**199 230 398**	4.000

Rp (inch)	D (mm)	H (mm)	H1 (mm)	H2 (mm)	H3 (mm)	H4 (mm)	H5 (mm)	L (mm)	L1 (mm)	L2 (mm)	L4 (mm)	L5 (mm)	L6 (mm)	L7 (mm)	z (mm)
⅜	50	159	27	62	168	40	77	92	194	56	25	261	76	48	64
½	50	159	27	62	168	40	77	95	194	56	25	261	76	48	64
¾	58	168	30	71	168	40	77	110	194	65	25	261	76	48	72
1	68	168	36	71	168	40	77	123	194	71	25	261	76	48	79
1 ¼	84	202	44	84	187	51	99	146	224	85	45	305	95	59	94
1 ½	97	202	51	84	187	51	99	157	224	89	45	305	95	59	95
2	124	225	64	106	187	51	99	183	224	101	45	305	95	59	107

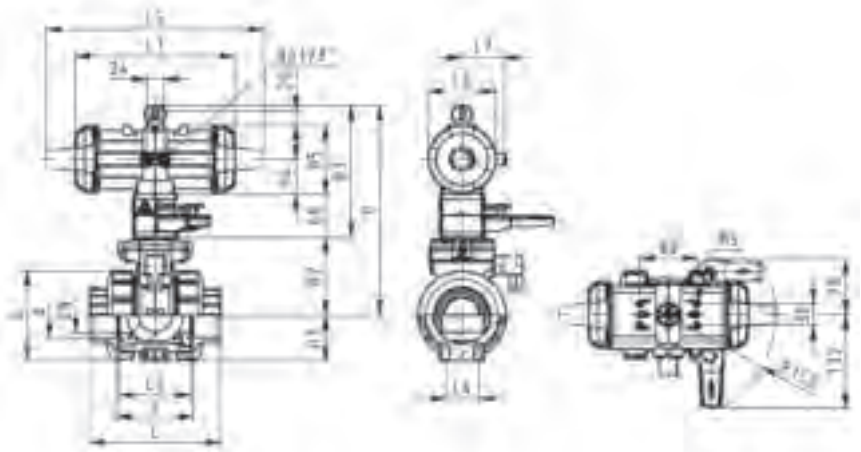



Ball valve type 230 PVC-U FO (Fail safe to open)
With manual override
With fixed flanges serrated metric

Model:

- Built on with pneumatic actuator PA11 (DN10/15-25), PA21 (DN32-50)
- Control time 90°<) 1-2s
- For easy installation and removal
- Integrated stainless steel mounting inserts
- Overall length according to EN 558
- Connecting dimension: ISO 7005 / EN 1092 / DIN 25 PN10 / BS4504

Option:

- Individual configuration of the valve (see diagram)

d (mm)	Size (inch)	DN (mm)	PN (bar)	kv-value (Δp=1 bar) (l/min)	EPDM Code	Weight (kg)	FPM Code	Weight (kg)
20	½	15	10	185	**199 230 263**	1.700	**199 230 273**	1.700
25	¾	20	10	350	**199 230 264**	1.900	**199 230 274**	1.900
32	1	25	10	700	**199 230 265**	2.100	**199 230 275**	2.100
40	1 ¼	32	10	1000	**199 230 266**	3.400	**199 230 276**	3.400
50	1 ½	40	10	1600	**199 230 267**	3.800	**199 230 277**	3.800
63	2	50	10	3100	**199 230 268**	4.900	**199 230 278**	4.900

d (mm)	D (mm)	H (mm)	H1 (mm)	H2 (mm)	H3 (mm)	H4 (mm)	H5 (mm)	H6 (mm)	L (mm)	L1 (mm)	L2 (mm)	L3 (mm)	L4 (mm)	L5 (mm)	L6 (mm)
20	50	230	27	62	168	40	77	48	124	194	56	130	25	261	76
25	58	239	30	71	168	40	77	53	144	194	65	150	25	261	76
32	68	239	36	71	168	40	77	58	154	194	71	160	25	261	76
40	84	271	44	84	187	51	99	70	174	224	85	180	45	305	95
50	97	271	51	84	187	51	99	75	194	224	89	200	45	305	95
63	124	293	64	106	187	51	99	83	224	224	101	230	45	305	95

d (mm)	L7 (mm)
20	48
25	48
32	48
40	59
50	59
63	59

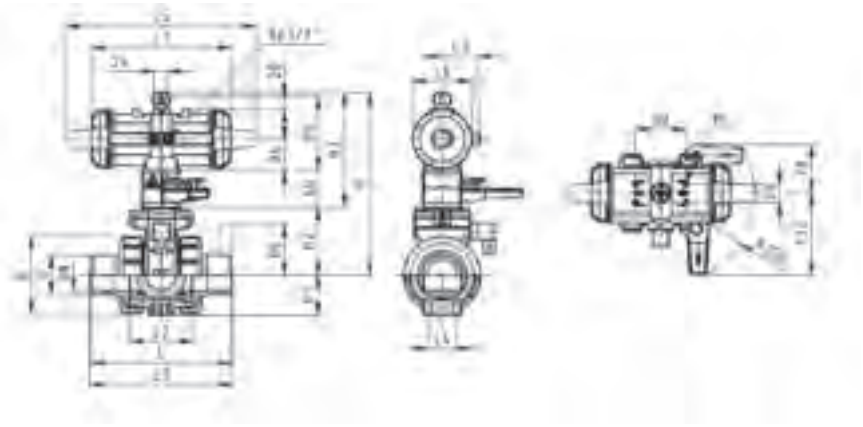



Ball valve type 230 PVC-U DA (Double acting)
With manual override
With solvent cement sockets metric

Model:

- Built on with pneumatic actuator PA11 (DN10/15-25), PA21 (DN32-50)
- Control time 90°<) 1-2s
- For easy installation and removal
- Integrated stainless steel mounting inserts

Option:

- Individual configuration of the valve (see diagram)

d (mm)	DN (mm)	PN (bar)	kv-value (Δp=1 bar) (l/min)	EPDM Code	Weight (kg)	FPM Code	Weight (kg)
16	10	10	70	**199 230 082**	1.459	**199 230 092**	1.459
20	15	10	185	**199 230 083**	1.459	**199 230 093**	1.044
25	20	10	350	**199 230 084**	1.139	**199 230 094**	1.576
32	25	10	700	**199 230 085**	1.241	**199 230 095**	1.700
40	32	10	1000	**199 230 086**	1.941	**199 230 096**	2.751
50	40	10	1600	**199 230 087**	2.172	**199 230 097**	3.073
63	50	10	3100	**199 230 088**	2.912	**199 230 098**	2.923

d (mm)	D (mm)	H (mm)	H1 (mm)	H2 (mm)	H3 (mm)	H4 (mm)	H5 (mm)	L (mm)	L1 (mm)	L2 (mm)	L4 (mm)	L5 (mm)	L6 (mm)	L7 (mm)	z (mm)
16	50	230	27	62	168	40	77	92	194	56	25	261	76	48	64
20	50	230	27	62	168	40	77	95	194	56	25	261	76	48	64
25	58	239	30	71	168	40	77	110	194	65	25	261	76	48	72
32	68	239	36	71	168	40	77	123	194	71	25	261	76	48	79
40	84	271	44	84	187	51	99	146	224	85	45	305	95	59	94
50	97	271	51	84	187	51	99	157	224	89	45	305	95	59	95
63	124	293	64	106	187	51	99	183	224	101	45	305	95	59	107

d (mm)	closest inch (inch)
16	⅜
20	½
25	¾
32	1
40	1 ¼
50	1 ½
63	2

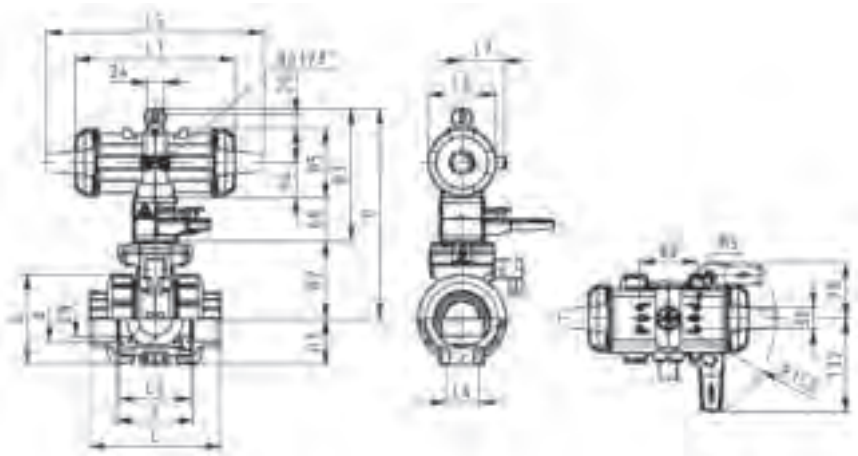



DN10/15 - 50



DN10/15 - 50

Ball valve type 230 PVC-U DA (Double acting)
With manual override
With solvent cement spigots metric

Model:

- Built on with pneumatic actuator PA11 (DN10/15-25), PA21 (DN32-50)
- Control time 90°<) 1-2s
- For easy installation and removal
- Integrated stainless steel mounting inserts

Option:

- Individual configuration of the valve (see diagram)

d (mm)	DN (mm)	PN (bar)	kv-value (Δp=1 bar) (l/min)	EPDM Code	Weight (kg)	FPM Code	Weight (kg)
16	10	10	70	**199 230 102**	1.459	**199 230 112**	1.459
20	15	10	185	**199 230 103**	1.459	**199 230 113**	1.459
25	20	10	350	**199 230 104**	1.576	**199 230 114**	1.576
32	25	10	700	**199 230 105**	1.700	**199 230 115**	1.700
40	32	10	1000	**199 230 106**	2.751	**199 230 116**	2.751
50	40	10	1600	**199 230 107**	3.073	**199 230 117**	3.073
63	50	10	3100	**199 230 108**	3.931	**199 230 118**	3.931

d (mm)	D (mm)	H (mm)	H1 (mm)	H2 (mm)	H3 (mm)	H4 (mm)	H5 (mm)	L (mm)	L1 (mm)	L2 (mm)	L3 (mm)	L4 (mm)	L5 (mm)	L6 (mm)	L7 (mm)
16	50	159	27	62	168	40	77	114	194	56	130	25	261	76	48
20	50	159	27	62	168	40	77	124	194	56	130	25	261	76	48
25	58	168	30	71	168	40	77	144	194	65	150	25	261	76	48
32	68	168	36	71	168	40	77	154	194	71	160	25	261	76	48
40	84	202	44	84	187	51	99	174	224	85	180	45	305	95	59
50	97	202	51	84	187	51	99	194	224	89	200	45	305	95	59
63	124	225	64	106	187	51	99	224	224	101	230	45	305	95	59

d (mm)	closest inch (inch)
16	⅜
20	½
25	¾
32	1
40	1 ¼
50	1 ½
63	2

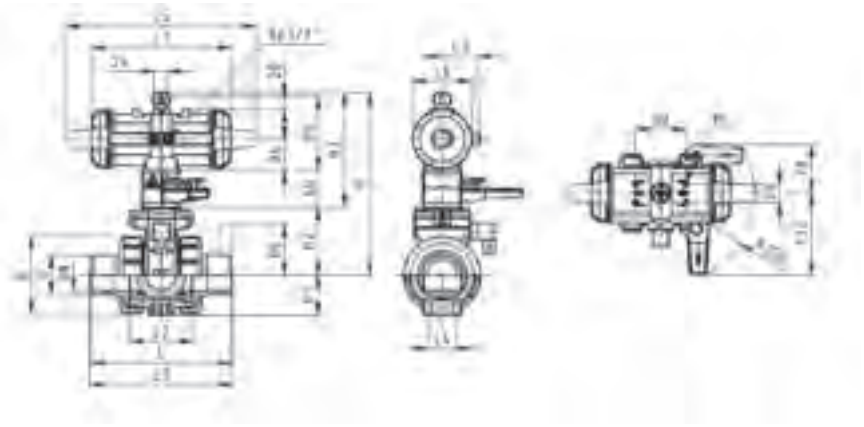



Ball valve type 230 PVC-U DA (Double acting)
With manual override
With threaded sockets Rp

Model:

- Built on with pneumatic actuator PA11 (DN10/15-25), PA21 (DN32-50)
- Control time 90°<) 1-2s
- For easy installation and removal
- Integrated stainless steel mounting inserts

Option:

- Individual configuration of the valve (see diagram)

Rp (inch)	DN (mm)	PN (bar)	kv-value (Δp=1 bar) (l/min)	EPDM Code	Weight (kg)	FPM Code	Weight (kg)
⅜	10	10	70	**199 230 642**	1.500	**199 230 652**	1.500
½	15	10	185	**199 230 643**	1.500	**199 230 653**	1.500
¾	20	10	350	**199 230 644**	1.600	**199 230 654**	1.600
1	25	10	700	**199 230 645**	1.700	**199 230 655**	1.700
1 ¼	32	10	1000	**199 230 646**	2.800	**199 230 656**	2.800
1 ½	40	10	1600	**199 230 647**	3.100	**199 230 657**	3.100
2	50	10	3100	**199 230 648**	4.000	**199 230 658**	4.000

Rp (inch)	D (mm)	H (mm)	H1 (mm)	H2 (mm)	H3 (mm)	H4 (mm)	H5 (mm)	L (mm)	L1 (mm)	L2 (mm)	L4 (mm)	L5 (mm)	L6 (mm)	L7 (mm)	z (mm)
⅜	50	159	27	62	168	40	77	92	194	56	25	261	76	48	64
½	50	159	27	62	168	40	77	95	194	56	25	261	76	48	64
¾	58	168	30	71	168	40	77	110	194	65	25	261	76	48	72
1	68	168	36	71	168	40	77	123	194	71	25	261	76	48	79
1 ¼	84	202	44	84	187	51	99	146	224	85	45	305	95	59	94
1 ½	97	202	51	84	187	51	99	157	224	89	45	305	95	59	95
2	124	225	64	106	187	51	99	183	224	101	45	305	95	59	107

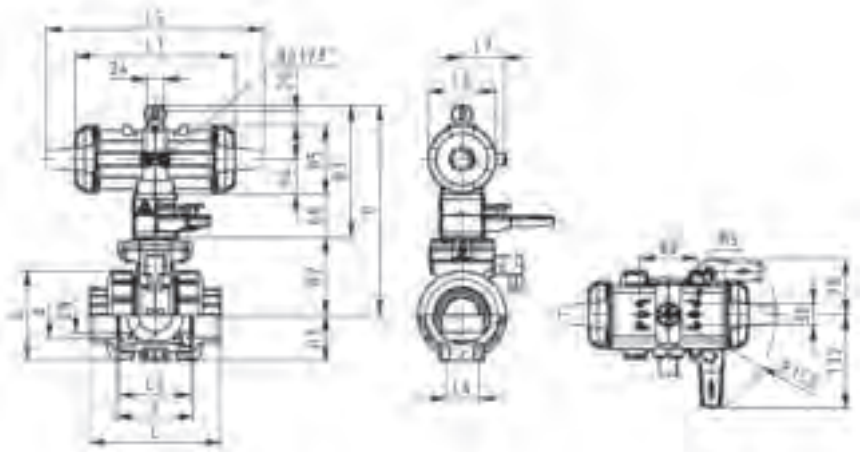



Ball valve type 230 PVC-U DA (Double acting)
With manual override
With fixed flanges serrated metric

Model:

- Built on with pneumatic actuator PA11 (DN10/15-25), PA21 (DN32-50)
- Control time 90°<) 1-2s
- For easy installation and removal
- Integrated stainless steel mounting inserts
- Overall length according to EN 558
- Connecting dimension: ISO 7005 / EN 1092 / DIN 25 PN10 / BS4504

Option:

- Individual configuration of the valve (see diagram)

d (mm)	Size (inch)	DN (mm)	PN (bar)	kv-value (Δp=1 bar) (l/min)	EPDM Code	Weight (kg)	FPM Code	Weight (kg)
20	½	15	10	185	**199 230 283**	1.700	**199 230 293**	1.700
25	¾	20	10	350	**199 230 284**	1.900	**199 230 294**	1.900
32	1	25	10	700	**199 230 285**	2.100	**199 230 295**	2.100
40	1 ¼	32	10	1000	**199 230 286**	2.579	**199 230 296**	3.400
50	1 ½	40	10	1600	**199 230 287**	3.800	**199 230 297**	3.800
63	2	50	10	3100	**199 230 288**	4.900	**199 230 298**	4.900

d (mm)	D (mm)	H (mm)	H1 (mm)	H2 (mm)	H3 (mm)	H4 (mm)	H5 (mm)	H6 (mm)	L (mm)	L1 (mm)	L2 (mm)	L3 (mm)	L4 (mm)	L5 (mm)	L6 (mm)
20	50	230	27	62	168	40	77	48	124	194	56	130	25	261	76
25	58	239	30	71	168	40	77	53	144	194	65	150	25	261	76
32	68	239	36	71	168	40	77	58	154	194	71	160	25	261	76
40	84	271	44	84	187	51	99	70	174	224	85	180	45	305	95
50	97	271	51	84	187	51	99	75	194	224	89	200	45	305	95
63	124	293	64	106	187	51	99	83	224	224	101	230	45	305	95

d (mm)	L7 (mm)
20	48
25	48
32	48
40	59
50	59
63	59

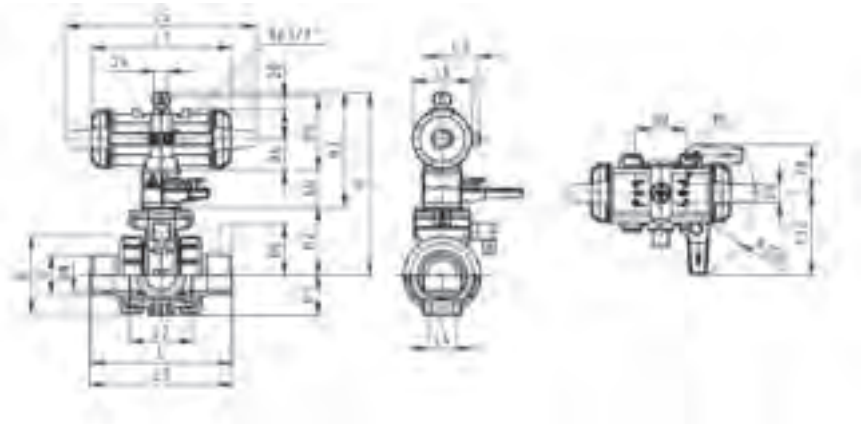



Ball valve type 230 PVC-U FC (Fail safe to close)
Without manual override
With solvent cement sockets metric

Model:

- Control time 90°<) 1-2s
- Assignment of actuators: PA11 (DN10/15-25), PA21 (DN32-50), PA30 (DN65), PA40 (DN80), PA40 (DN100)
- For easy installation and removal
- Integrated stainless steel mounting inserts

Option:

- Individual configuration of the valve (see diagram)



d (mm)	DN (mm)	PN (bar)	kv-value (Δp=1 bar) (l/min)	EPDM Code	Weight (kg)	FPM Code	Weight (kg)
16	10	10	70	**199 230 122**	3.074	**199 230 132**	1.159
20	15	10	185	**199 230 123**	1.034	**199 230 133**	1.034
25	20	10	350	**199 230 124**	1.133	**199 230 134**	1.133
32	25	10	700	**199 230 125**	1.233	**199 230 135**	1.238
40	32	10	1000	**199 230 126**	2.183	**199 230 136**	2.188
50	40	10	1600	**199 230 127**	2.408	**199 230 137**	2.421
63	50	10	3100	**199 230 128**	3.121	**199 230 138**	3.163
75	65	10	5000	**199 230 129**	6.136	**199 230 139**	7.800
90	80	10	7000	**199 230 130**	9.536	**199 230 140**	10.200
110	100	10	11000	**199 230 131**	15.500	**199 230 141**	15.500

d (mm)	D (mm)	H (mm)	H1 (mm)	H2 (mm)	H5 (mm)	L (mm)	L1 (mm)	L2 (mm)	L4 (mm)	L5 (mm)	L6 (mm)	L7 (mm)	z (mm)	closest inch (inch)
16	50	159	27	62	77	92	194	56	25	261	76	48	64	⅜
20	50	159	27	62	77	95	194	56	25	261	76	48	64	½
25	58	168	30	71	77	110	194	65	25	261	76	48	72	¾
32	68	168	36	71	77	123	194	71	25	261	76	48	79	1
40	84	202	44	84	99	146	224	85	45	305	95	59	94	1 ¼
50	97	202	51	84	99	157	224	89	45	305	95	59	95	1 ½
63	124	225	64	106	99	183	224	101	45	305	95	59	107	2
75	166	262	85	156	70	233		136	70	276	65		144	2 ½
90	200	281	105	168	78	254		141	70	341	72		151	3
110	238	292	123	175	86	301		164	120	369	80		174	4

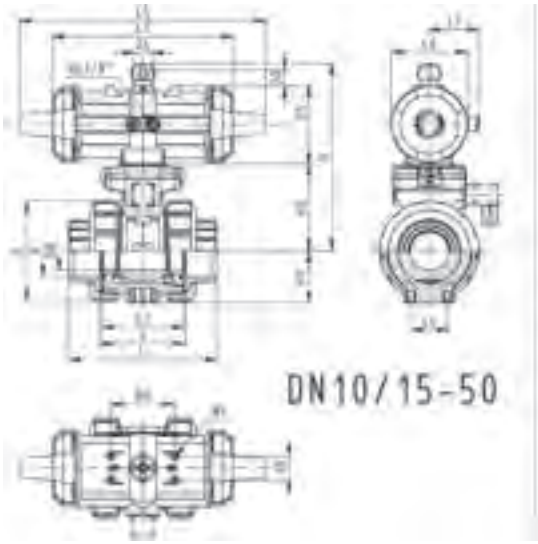

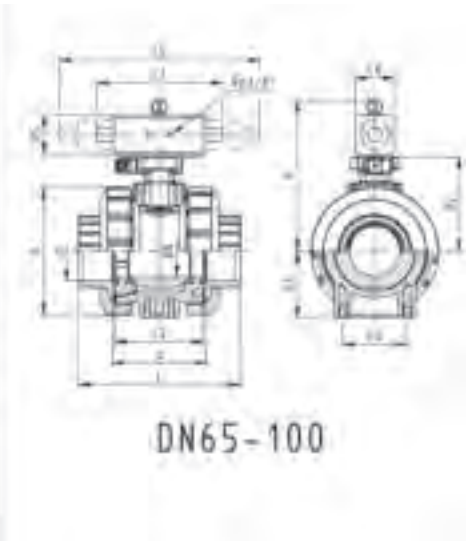



Ball valve type 230 PVC-U FC (Fail safe to close)
Without manual override
With solvent cement spigots metric

Model:

- Control time 90°<) 1-2s
- Assignment of actuators: PA11 (DN10/15-25), PA21 (DN32-50), PA30 (DN65), PA40 (DN80), PA40 (DN100)
- For easy installation and removal
- Integrated stainless steel mounting inserts

Option:

- Individual configuration of the valve (see diagram)



d (mm)	DN (mm)	PN (bar)	kv-value (Δp=1 bar) (l/min)	EPDM Code	Weight (kg)	FPM Code	Weight (kg)
16	10	10	70	**199 230 142**	1.159	**199 230 152**	1.159
20	15	10	185	**199 230 143**	1.159	**199 230 153**	1.159
25	20	10	350	**199 230 144**	1.276	**199 230 154**	1.276
32	25	10	700	**199 230 145**	1.400	**199 230 155**	1.400
40	32	10	1000	**199 230 146**	2.451	**199 230 156**	2.451
50	40	10	1600	**199 230 147**	2.773	**199 230 157**	2.773
63	50	10	3100	**199 230 148**	3.631	**199 230 158**	3.631
75	65	10	5000	**199 230 149**	7.900	**199 230 159**	7.900
90	80	10	7000	**199 230 150**	10.400	**199 230 160**	10.400
110	100	10	11000	**199 230 151**	15.700	**199 230 161**	15.700

d (mm)	D (mm)	H (mm)	H1 (mm)	H2 (mm)	H5 (mm)	L (mm)	L1 (mm)	L2 (mm)	L3 (mm)	L4 (mm)	L5 (mm)	L6 (mm)	L7 (mm)	closest inch (inch)
16	50	159	27	62	77	114	194	56	0	25	261	76	48	⅜
20	50	159	27	62	77	124	194	56	130	25	261	76	48	½
25	58	168	30	71	77	144	194	65	150	25	261	76	48	¾
32	68	168	36	71	77	154	194	71	160	25	261	76	48	1
40	84	202	44	84	99	174	224	85	180	45	305	95	59	1 ¼
50	97	202	51	84	99	194	224	89	200	45	305	95	59	1 ½
63	124	225	64	106	99	224	224	101	230	45	305	95	59	2
75	166	262	85	156	70	284		136	290	70	276	65		2 ½
90	200	281	105	168	78	300		141	310	70	341	72		3
110	238	292	123	175	86	340		164	350	120	369	80		4

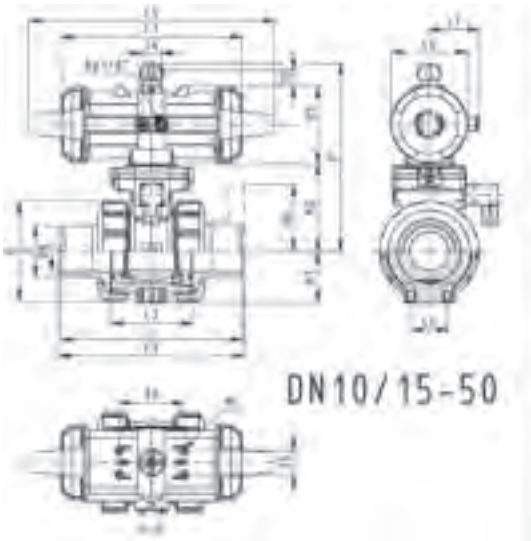

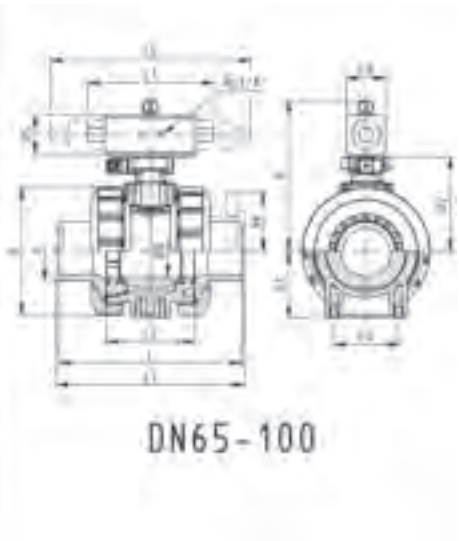



Ball valve type 230 PVC-U FC (Fail safe to close)
Without manual override
With threaded sockets Rp

Model:

- Control time 90°<) 1-2s
- Assignment of actuators: PA11 (DN10/15-25), PA21 (DN32-50), PA30 (DN65), PA40 (DN80), PA40 (DN100)
- For easy installation and removal
- Integrated stainless steel mounting inserts

Option:

- Individual configuration of the valve (see diagram)



Rp (inch)	DN (mm)	PN (bar)	kv-value (Δp=1 bar) (l/min)	EPDM Code	Weight (kg)	FPM Code	Weight (kg)
⅜	10	10	70	**199 230 662**	1.200	**199 230 672**	1.200
½	15	10	185	**199 230 663**	1.200	**199 230 673**	1.200
¾	20	10	350	**199 230 664**	1.300	**199 230 674**	1.300
1	25	10	700	**199 230 665**	1.400	**199 230 675**	1.400
1 ¼	32	10	1000	**199 230 666**	2.500	**199 230 676**	2.500
1 ½	40	10	1600	**199 230 667**	3.073	**199 230 677**	2.800
2	50	10	3100	**199 230 668**	3.931	**199 230 678**	3.700
2 ½	65	10	5000	**199 230 669**	7.800	**199 230 679**	7.800
3	80	10	7000	**199 230 670**	10.300	**199 230 680**	10.300
4	100	10	11000	**199 230 671**	15.500	**199 230 681**	15.500

Rp (inch)	D (mm)	H (mm)	H1 (mm)	H2 (mm)	H5 (mm)	L (mm)	L1 (mm)	L2 (mm)	L4 (mm)	L5 (mm)	L6 (mm)	L7 (mm)	z (mm)
⅜	50	159	27	62	77	92	194	56	25	261	76	48	64
½	50	159	27	62	77	95	194	56	25	261	76	48	64
¾	58	168	30	71	77	110	194	65	25	261	76	48	72
1	68	168	36	71	77	123	194	71	25	261	76	48	79
1 ¼	84	202	44	84	99	146	224	85	45	305	95	59	94
1 ½	97	202	51	84	99	157	224	89	45	305	95	59	95
2	124	225	64	106	99	183	224	101	45	305	95	59	107
2 ½	166	262	85	156	70	233		136	70	276	65		144
3	200	281	105	168	78	254		141	70	341	72		151
4	238	292	123	175	86	301		164	120	369	80		174

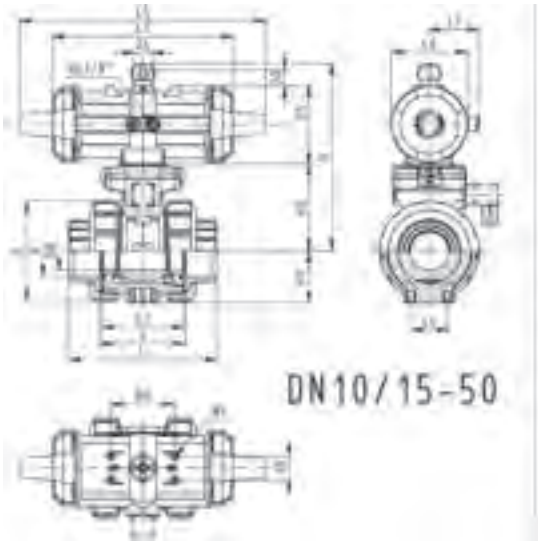

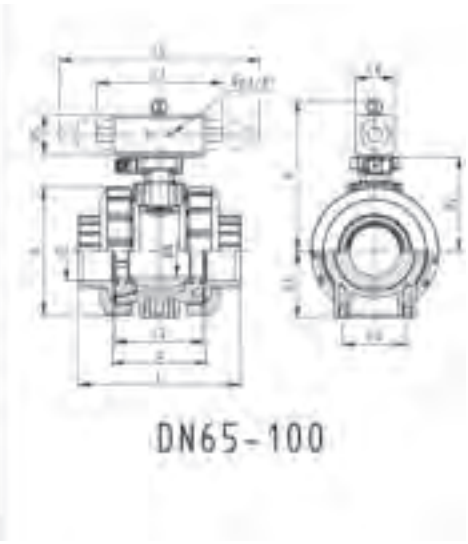



Ball valve type 230 PVC-U FC (Fail safe to close)
Without manual override
With fixed flanges serrated metric

Model:

- Built on with pneumatic actuator PA11 (DN10/15-25), PA21 (DN32-50)
- Control time 90°<) 1-2s
- For easy installation and removal
- Integrated stainless steel mounting inserts
- Overall length according to EN 558
- Connecting dimension: ISO 7005 / EN 1092 / DIN 25 PN10 / BS4504

Option:

- Individual configuration of the valve (see diagram)

d (mm)	Size (inch)	DN (mm)	PN (bar)	kv-value (Δp=1 bar) (l/min)	EPDM Code	Weight (kg)	FPM Code	Weight (kg)
20	½	15	10	185	**199 230 303**	1.700	**199 230 313**	1.700
25	¾	20	10	350	**199 230 304**	1.900	**199 230 314**	1.900
32	1	25	10	700	**199 230 305**	2.100	**199 230 315**	2.100
40	1 ¼	32	10	1000	**199 230 306**	3.400	**199 230 316**	3.400
50	1 ½	40	10	1600	**199 230 307**	3.800	**199 230 317**	3.800
63	2	50	10	3100	**199 230 308**	4.900	**199 230 318**	4.900

d (mm)	D (mm)	H (mm)	H1 (mm)	H2 (mm)	H4 (mm)	H5 (mm)	H6 (mm)	L (mm)	L1 (mm)	L2 (mm)	L3 (mm)	L4 (mm)	L5 (mm)	L6 (mm)	L7 (mm)
20	50	159	27	62	40	77	48	124	194	56	130	25	261	76	48
25	58	168	30	71	40	77	53	144	194	65	150	25	261	76	48
32	68	168	36	71	40	77	58	154	194	71	160	25	261	76	48
40	84	202	44	84	51	99	70	174	224	85	180	45	305	95	59
50	97	202	51	84	51	99	75	194	224	89	200	45	305	95	59
63	124	225	64	106	51	99	83	224	224	101	230	45	305	95	59

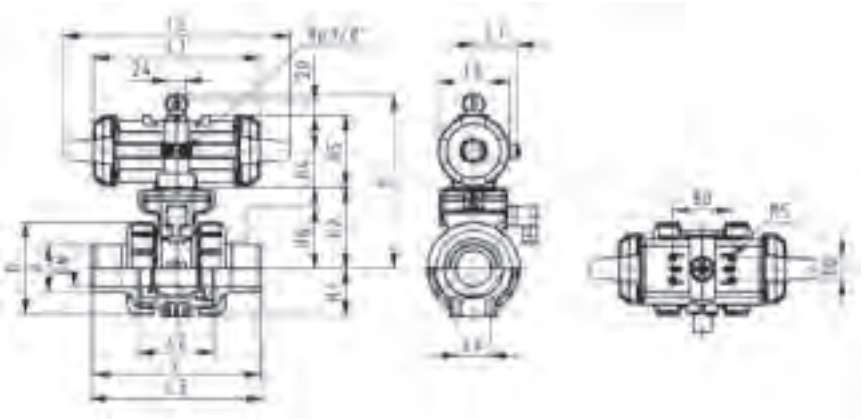



Ball valve type 230 PVC-U FC (Fail safe to close)
Without manual override
With backing flanges PP-st metric

Model:

- Control time 90°<) 1-2s
- Assignment of actuators: PA11 (DN10/15-25), PA21 (DN32-50), PA30 (DN65), PA40 (DN80), PA40 (DN100)
- For easy installation and removal
- Integrated stainless steel mounting inserts
- Overall length according to EN 558
- Connecting dimension: ISO 7005, EN 1092, BS 4504, DIN 2501

Option:

- Individual configuration of the valve (see diagram)

d (mm)	DN (mm)	PN (bar)	kv-value (Δp=1 bar) (l/min)	EPDM Code	Weight (kg)	FPM Code	Weight (kg)
75	65	10	5000	**199 234 469**	11.900	**199 234 479**	11.900
90	80	10	7000	**199 234 470**	12.976	**199 234 480**	15.300
110	100	10	11000	**199 234 471**	22.300	**199 234 481**	22.300

d (mm)	D (mm)	H (mm)	H1 (mm)	H2 (mm)	H5 (mm)	H6 (mm)	L (mm)	L2 (mm)	L3 (mm)	L4 (mm)	L5 (mm)	L6 (mm)
75	166	262	85	156	70	93	284	136	290	70	276	65
90	200	281	105	168	78	100	300	141	310	70	341	72
110	238	292	123	175	86	110	340	164	350	120	369	80

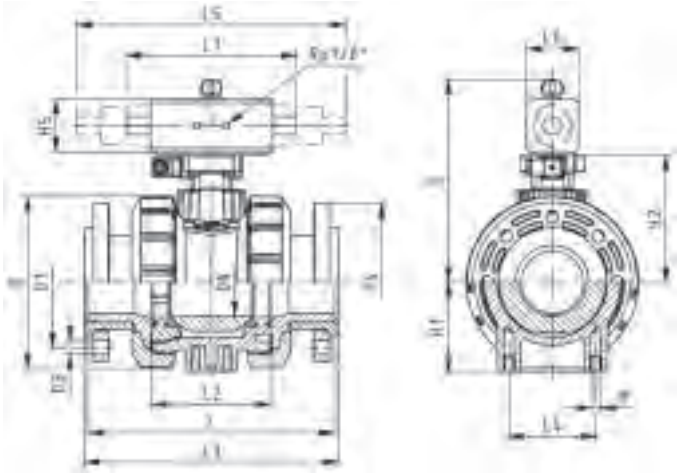



DN10/15 - 50

Ball valve type 230 PVC-U FO (Fail safe to open)
Without manual override
With solvent cement sockets metric

Model:

- Control time 90°<) 1-2s
- Assignment of actuators: PA11 (DN10/15-25), PA21 (DN32-50), PA30 (DN65), PA40 (DN80), PA40 (DN100)
- For easy installation and removal
- Integrated stainless steel mounting inserts

Option:

- Individual configuration of the valve (see diagram)



d (mm)	DN (mm)	PN (bar)	kv-value (Δp=1 bar) (l/min)	EPDM Code	Weight (kg)	FPM Code	Weight (kg)
16	10	10	70	**199 230 162**	1.159	**199 230 172**	1.159
20	15	10	185	**199 230 163**	1.159	**199 230 173**	1.159
25	20	10	350	**199 230 164**	1.128	**199 230 174**	1.276
32	25	10	700	**199 230 165**	1.400	**199 230 175**	1.400
40	32	10	1000	**199 230 166**	2.184	**199 230 176**	2.451
50	40	10	1600	**199 230 167**	2.388	**199 230 177**	2.773
63	50	10	3100	**199 230 168**	3.156	**199 230 178**	3.631
75	65	10	5000	**199 230 169**	7.800	**199 230 179**	7.800
90	80	10	7000	**199 230 170**	10.200	**199 230 180**	10.200
110	100	10	11000	**199 230 171**	15.500	**199 230 181**	15.500

d (mm)	D (mm)	H (mm)	H1 (mm)	H2 (mm)	H5 (mm)	L (mm)	L1 (mm)	L2 (mm)	L4 (mm)	L5 (mm)	L6 (mm)	L7 (mm)	z (mm)	closest inch (inch)
16	50	159	27	62	77	92	194	56	25	261	76	48	64	⅜
20	50	159	27	62	77	95	194	56	25	261	76	48	64	½
25	58	168	30	71	77	110	194	65	25	261	76	48	72	¾
32	68	168	36	71	77	123	194	71	25	261	76	48	79	1
40	84	202	44	84	99	146	224	85	45	305	95	59	94	1 ¼
50	97	202	51	84	99	157	224	89	45	305	95	59	95	1 ½
63	124	225	64	106	99	183	224	101	45	305	95	59	107	2
75	166	262	85	156	70	233		136	70	276	65		144	2 ½
90	200	281	105	168	78	254		141	70	341	72		151	3
110	238	292	123	175	86	301		164	120	369	80		174	4

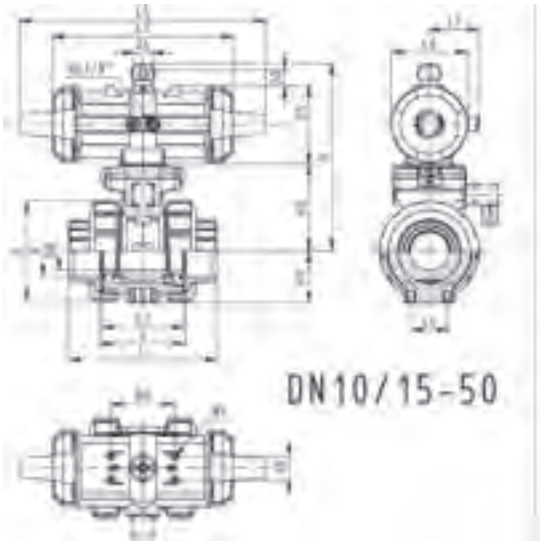

DN10/15-50

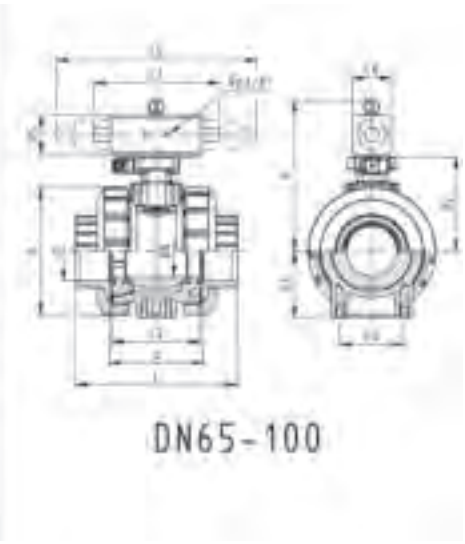

DN65-100



Ball valve type 230 PVC-U FO (Fail safe to open)
Without manual override
With solvent cement spigots metric

Model:

- Control time 90°<) 1-2s
- Assignment of actuators: PA11 (DN10/15-25), PA21 (DN32-50), PA30 (DN65), PA40 (DN80), PA40 (DN100)
- For easy installation and removal
- Integrated stainless steel mounting inserts

Option:

- Individual configuration of the valve (see diagram)



d (mm)	DN (mm)	PN (bar)	kv-value (Δp=1 bar) (l/min)	EPDM Code	Weight (kg)	FPM Code	Weight (kg)
16	10	10	70	**199 230 182**	1.159	**199 230 192**	1.159
20	15	10	185	**199 230 183**	1.159	**199 230 193**	1.159
25	20	10	350	**199 230 184**	1.276	**199 230 194**	1.276
32	25	10	700	**199 230 185**	1.400	**199 230 195**	1.400
40	32	10	1000	**199 230 186**	2.451	**199 230 196**	2.451
50	40	10	1600	**199 230 187**	2.450	**199 230 197**	2.773
63	50	10	3100	**199 230 188**	3.233	**199 230 198**	3.631
75	65	10	5000	**199 230 189**	7.900	**199 230 199**	7.900
90	80	10	7000	**199 230 190**	10.400	**199 230 200**	10.400
110	100	10	11000	**199 230 191**	15.700	**199 230 201**	15.700

d (mm)	D (mm)	H (mm)	H1 (mm)	H2 (mm)	H5 (mm)	L (mm)	L1 (mm)	L2 (mm)	L3 (mm)	L4 (mm)	L5 (mm)	L6 (mm)	L7 (mm)	closest inch (inch)
16	50	159	27	62	77	114	194	56	0	25	261	76	48	⅜
20	50	159	27	62	77	124	194	56	130	25	261	76	48	½
25	58	168	30	71	77	144	194	65	150	25	261	76	48	¾
32	68	168	36	71	77	154	194	71	160	25	261	76	48	1
40	84	202	44	84	99	174	224	85	180	45	305	95	59	1 ¼
50	97	202	51	84	99	194	224	89	200	45	305	95	59	1 ½
63	124	225	64	106	99	224	224	101	230	45	305	95	59	2
75	166	262	85	156	70	284		136	290	70	276	65		2 ½
90	200	281	105	168	78	300		141	310	70	341	72		3
110	238	292	123	175	86	340		164	350	120	369	80		4

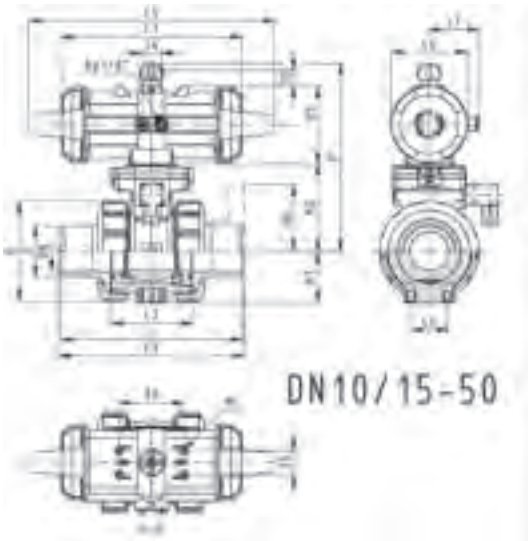

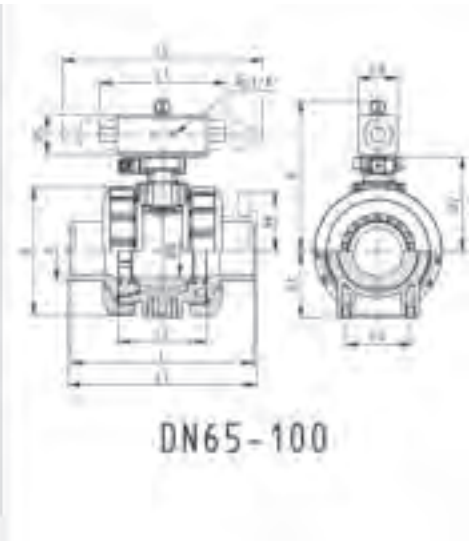



Ball valve type 230 PVC-U FO (Fail safe to open)
Without manual override
With threaded sockets Rp

Model:

- Control time 90°<) 1-2s
- Assignment of actuators: PA11 (DN10/15-25), PA21 (DN32-50), PA30 (DN65), PA40 (DN80), PA40 (DN100)
- For easy installation and removal
- Integrated stainless steel mounting inserts

Option:

- Individual configuration of the valve (see diagram)



Rp (inch)	DN (mm)	PN (bar)	kv-value (Δp=1 bar) (l/min)	EPDM Code	Weight (kg)	FPM Code	Weight (kg)
⅜	10	10	70	**199 230 682**	1.200	**199 230 692**	1.200
½	15	10	185	**199 230 683**	1.200	**199 230 693**	1.200
¾	20	10	350	**199 230 684**	1.300	**199 230 694**	1.300
1	25	10	700	**199 230 685**	1.400	**199 230 695**	1.400
1 ¼	32	10	1000	**199 230 686**	2.500	**199 230 696**	2.500
1 ½	40	10	1600	**199 230 687**	2.800	**199 230 697**	2.800
2	50	10	3100	**199 230 688**	3.700	**199 230 698**	3.700
2 ½	65	10	5000	**199 230 689**	7.800	**199 230 699**	7.800
3	80	10	7000	**199 230 690**	10.300	**199 230 700**	10.300
4	100	10	11000	**199 230 691**	15.500	**199 230 701**	15.500

Rp (inch)	D (mm)	H (mm)	H1 (mm)	H2 (mm)	H5 (mm)	L (mm)	L1 (mm)	L2 (mm)	L4 (mm)	L5 (mm)	L6 (mm)	L7 (mm)	z (mm)
⅜	50	159	27	62	77	92	194	56	25	261	76	48	64
½	50	159	27	62	77	95	194	56	25	261	76	48	64
¾	58	168	30	71	77	110	194	65	25	261	76	48	72
1	68	168	36	71	77	123	194	71	25	261	76	48	79
1 ¼	84	202	44	84	99	146	224	85	45	305	95	59	94
1 ½	97	202	51	84	99	157	224	89	45	305	95	59	95
2	124	225	64	106	99	183	224	101	45	305	95	59	107
2 ½	166	262	85	156	70	233		136	70	276	65		144
3	200	281	105	168	78	254		141	70	341	72		151
4	238	292	123	175	86	301		164	120	369	80		174

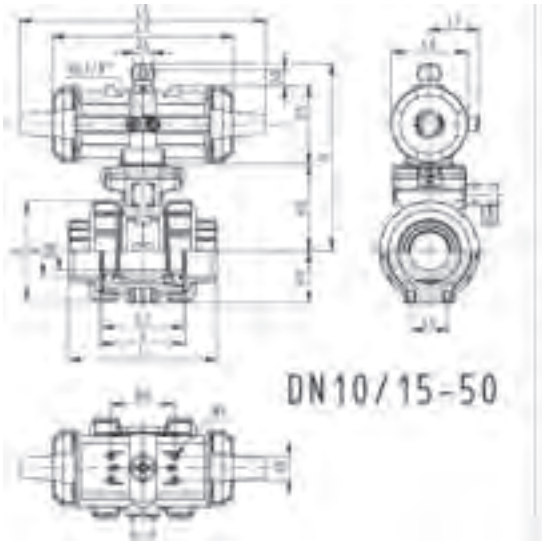

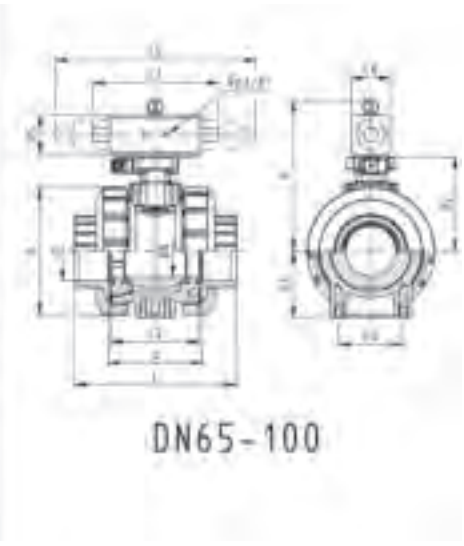



Ball valve type 230 PVC-U FO (Fail safe to open)
Without manual override
With fixed flanges serrated metric

Model:

- Built on with pneumatic actuator PA11 (DN10/15-25), PA21 (DN32-50)
- Control time 90°<) 1-2s
- For easy installation and removal
- Integrated stainless steel mounting inserts
- Overall length according to EN 558
- Connecting dimension: ISO 7005 / EN 1092 / DIN 25 PN10 / BS4504

Option:

- Individual configuration of the valve (see diagram)

d (mm)	Size (inch)	DN (mm)	PN (bar)	kv-value (Δp=1 bar) (l/min)	EPDM Code	Weight (kg)	FPM Code	Weight (kg)
20	½	15	10	185	**199 230 323**	1.700	**199 230 333**	1.700
25	¾	20	10	350	**199 230 324**	1.900	**199 230 334**	1.900
32	1	25	10	700	**199 230 325**	2.100	**199 230 335**	2.100
40	1 ¼	32	10	1000	**199 230 326**	3.400	**199 230 336**	3.400
50	1 ½	40	10	1600	**199 230 327**	3.800	**199 230 337**	3.800
63	2	50	10	3100	**199 230 328**	4.900	**199 230 338**	4.900

d (mm)	D (mm)	H (mm)	H1 (mm)	H2 (mm)	H4 (mm)	H5 (mm)	H6 (mm)	L (mm)	L1 (mm)	L2 (mm)	L3 (mm)	L4 (mm)	L5 (mm)	L6 (mm)	L7 (mm)
20	50	159	27	62	40	77	48	124	194	56	130	25	261	76	48
25	58	168	30	71	40	77	53	144	194	65	150	25	261	76	48
32	68	168	36	71	40	77	58	154	194	71	160	25	261	76	48
40	84	202	44	84	51	99	70	174	224	85	180	45	305	95	59
50	97	202	51	84	51	99	75	194	224	89	200	45	305	95	59
63	124	225	64	106	51	99	83	224	224	101	230	45	305	95	59

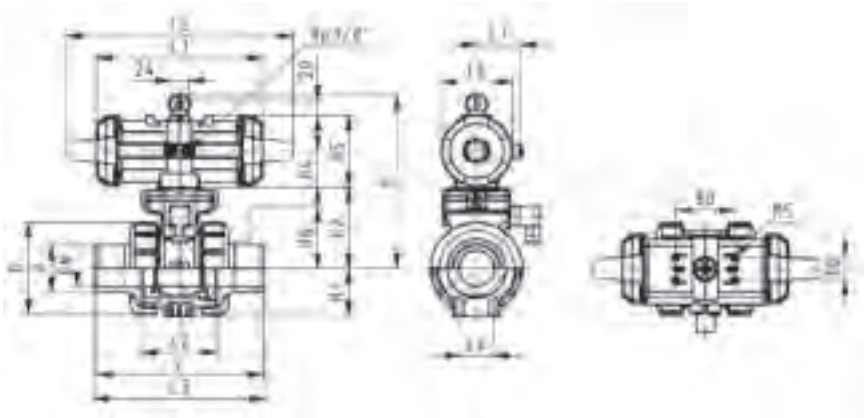



Ball valve type 230 PVC-U FO (Fail safe to open)
Without manual override
With backing flanges PP-st metric

Model:

- Control time 90°<) 1-2s
- Assignment of actuators: PA11 (DN10/15-25), PA21 (DN32-50), PA30 (DN65), PA40 (DN80), PA40 (DN100)
- For easy installation and removal
- Integrated stainless steel mounting inserts
- Overall length according to EN 558
- Connecting dimension: ISO 7005, EN 1092, BS 4504, DIN 2501

Option:

- Individual configuration of the valve (see diagram)

d (mm)	DN (mm)	PN (bar)	kv-value (Δp=1 bar) (l/min)	EPDM Code	Weight (kg)	FPM Code	Weight (kg)
75	65	10	5000	**199 234 489**	11.900	**199 234 499**	11.900
90	80	10	7000	**199 234 490**	15.300	**199 234 500**	15.300
110	100	10	11000	**199 234 491**	22.300	**199 234 501**	22.300

d (mm)	D (mm)	H (mm)	H1 (mm)	H2 (mm)	H5 (mm)	H6 (mm)	L (mm)	L2 (mm)	L3 (mm)	L4 (mm)	L5 (mm)	L6 (mm)
75	166	262	85	156	70	93	284	136	290	70	276	65
90	200	281	105	168	78	100	300	141	310	70	341	72
110	238	292	123	175	86	110	340	164	350	120	369	80

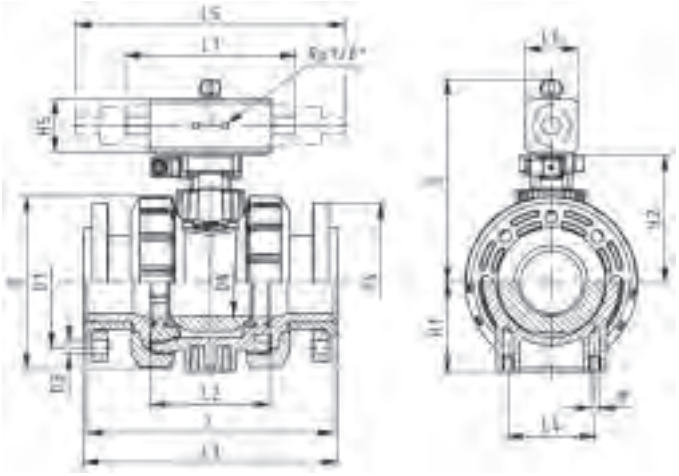



Ball valve type 230 PVC-U DA (Double acting)
Without manual override
With solvent cement sockets metric

Model:

- Control time 90°<) 1-2s
- Assignment of actuators: PA11 (DN10/15-25), PA21 (DN32-50), PA35 (DN65), PA40 (DN80), PA45 (DN100)
- For easy installation and removal
- Integrated stainless steel mounting inserts

Option:

- Individual configuration of the valve (see diagram)



d (mm)	DN (mm)	PN (bar)	kv-value (Δp=1 bar) (l/min)	EPDM Code	Weight (kg)	FPM Code	Weight (kg)
16	10	10	70	**199 230 202**	0.805	**199 230 212**	1.159
20	15	10	185	**199 230 203**	0.807	**199 230 213**	1.159
25	20	10	350	**199 230 204**	0.902	**199 230 214**	1.276
32	25	10	700	**199 230 205**	1.400	**199 230 215**	1.400
40	32	10	1000	**199 230 206**	1.691	**199 230 216**	2.451
50	40	10	1600	**199 230 207**	1.919	**199 230 217**	2.773
63	50	10	3100	**199 230 208**	2.651	**199 230 218**	2.673
75	65	10	5000	**199 230 209**	6.600	**199 230 219**	6.600
90	80	10	7000	**199 230 210**	9.500	**199 230 220**	9.500
110	100	10	11000	**199 230 211**	13.700	**199 230 221**	13.700

d (mm)	D (mm)	H (mm)	H1 (mm)	H2 (mm)	H5 (mm)	L (mm)	L1 (mm)	L2 (mm)	L4 (mm)	L5 (mm)	L6 (mm)	L7 (mm)	z (mm)	closest inch (inch)
16	50	159	27	62	77	92	194	56	25	261	76	48	64	⅜
20	50	159	27	62	77	95	194	56	25	261	76	48	64	½
25	58	168	30	71	77	110	194	65	25	261	76	48	72	¾
32	68	168	36	71	77	123	194	71	25	261	76	48	79	1
40	84	202	44	84	99	146	224	85	45	305	95	59	94	1 ¼
50	97	202	51	84	99	157	224	89	45	305	95	59	95	1 ½
63	124	225	64	106	99	183	224	101	45	305	95	59	107	2
75	166	257	85	156	66	233	144	136	70		60		144	2 ½
90	200	274	105	168	70	254	152	141	70		65		151	3
110	238	273	123	175	78	301	169	164	120		72		174	4

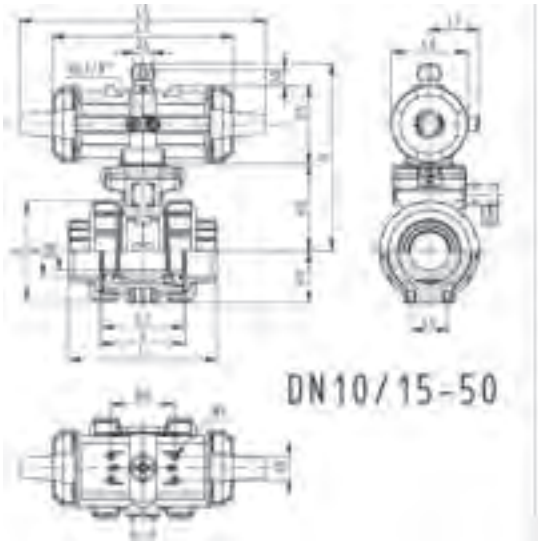

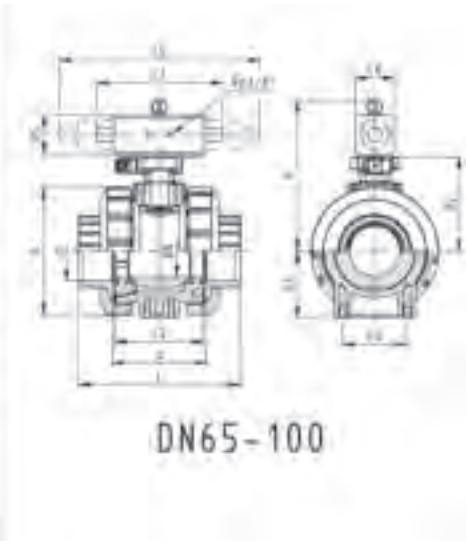



Ball valve type 230 PVC-U DA (Double acting)
Without manual override
With solvent cement spigots metric

Model:

- Control time 90°<) 1-2s
- Assignment of actuators: PA11 (DN10/15-25), PA21 (DN32-50), PA35 (DN65), PA40 (DN80), PA45 (DN100)
- For easy installation and removal
- Integrated stainless steel mounting inserts

Option:

- Individual configuration of the valve (see diagram)



d (mm)	DN (mm)	PN (bar)	kv-value (Δp=1 bar) (l/min)	EPDM Code	Weight (kg)	FPM Code	Weight (kg)
16	10	10	70	**199 230 222**	1.159	**199 230 232**	1.159
20	15	10	185	**199 230 223**	1.159	**199 230 233**	1.159
25	20	10	350	**199 230 224**	1.276	**199 230 234**	1.276
32	25	10	700	**199 230 225**	1.400	**199 230 235**	1.400
40	32	10	1000	**199 230 226**	2.451	**199 230 236**	2.451
50	40	10	1600	**199 230 227**	2.773	**199 230 237**	2.773
63	50	10	3100	**199 230 228**	3.631	**199 230 238**	3.631
75	65	10	5000	**199 230 229**	6.800	**199 230 239**	6.800
90	80	10	7000	**199 230 230**	9.700	**199 230 240**	9.700
110	100	10	11000	**199 230 231**	13.900	**199 230 241**	13.900

d (mm)	D (mm)	H (mm)	H1 (mm)	H2 (mm)	H5 (mm)	L (mm)	L1 (mm)	L2 (mm)	L3 (mm)	L4 (mm)	L5 (mm)	L6 (mm)	L7 (mm)	closest inch (inch)
16	50	159	27	62	77	114	194	56	0	25	261	76	48	⅜
20	50	159	27	62	77	124	194	56	130	25	261	76	48	½
25	58	168	30	71	77	144	194	65	150	25	261	76	48	¾
32	68	168	36	71	77	154	194	71	160	25	261	76	48	1
40	84	202	44	84	99	174	224	85	180	45	305	95	59	1 ¼
50	97	202	51	84	99	194	224	89	200	45	305	95	59	1 ½
63	124	225	64	106	99	224	224	101	230	45	305	95	59	2
75	166	257	85	156	66	284	144	136	290	70		60		2 ½
90	200	274	105	168	70	300	152	141	310	70		65		3
110	238	273	123	175	78	340	169	164	350	120		72		4

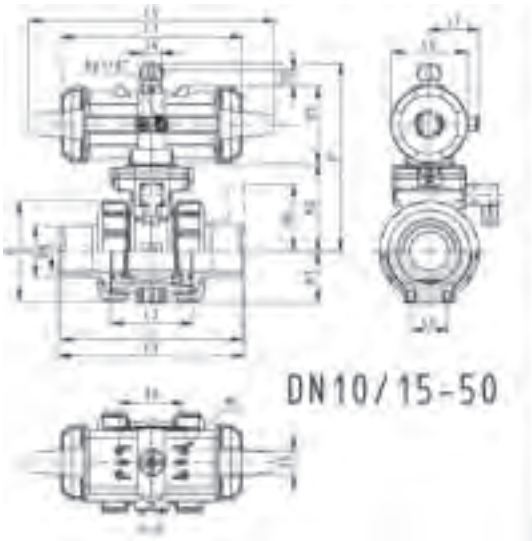

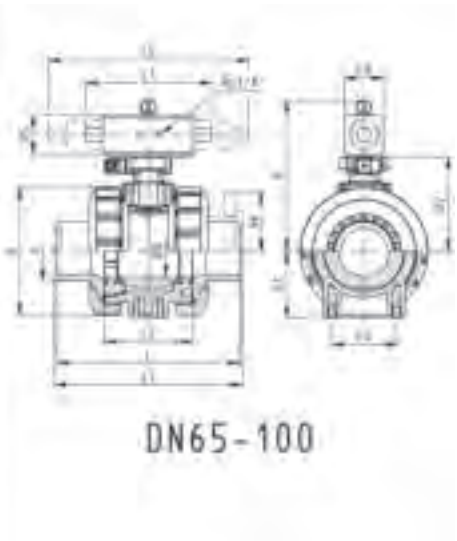



Ball valve type 230 PVC-U DA (Double acting)
Without manual override
With threaded sockets Rp

Model:

- Control time 90°<) 1-2s
- Assignment of actuators: PA11 (DN10/15-25), PA21 (DN32-50), PA35 (DN65), PA40 (DN80), PA45 (DN100)
- For easy installation and removal
- Integrated stainless steel mounting inserts

Option:

- Individual configuration of the valve (see diagram)



Rp (inch)	DN (mm)	PN (bar)	kv-value (Δp=1 bar) (l/min)	EPDM Code	Weight (kg)	FPM Code	Weight (kg)
⅜	10	10	70	**199 230 712**	1.200	**199 230 732**	1.200
½	15	10	185	**199 230 713**	1.200	**199 230 733**	1.200
¾	20	10	350	**199 230 714**	1.300	**199 230 734**	1.300
1	25	10	700	**199 230 715**	1.400	**199 230 735**	1.400
1 ¼	32	10	1000	**199 230 716**	2.500	**199 230 736**	2.500
1 ½	40	10	1600	**199 230 717**	2.800	**199 230 737**	2.800
2	50	10	3100	**199 230 718**	3.700	**199 230 738**	3.700
2 ½	65	10	5000	**199 230 719**	6.700	**199 230 739**	6.700
3	80	10	7000	**199 230 720**	9.700	**199 230 740**	9.700
4	100	10	11000	**199 230 721**	13.700	**199 230 741**	13.700

Rp (inch)	D (mm)	H (mm)	H1 (mm)	H2 (mm)	H5 (mm)	L (mm)	L1 (mm)	L2 (mm)	L4 (mm)	L5 (mm)	L6 (mm)	L7 (mm)	z (mm)
⅜	50	159	27	62	77	92	194	56	25	261	76	48	64
½	50	159	27	62	77	95	194	56	25	261	76	48	64
¾	58	168	30	71	77	110	194	65	25	261	76	48	72
1	68	168	36	71	77	123	194	71	25	261	76	48	79
1 ¼	84	202	44	84	99	146	224	85	45	305	95	59	94
1 ½	97	202	51	84	99	157	224	89	45	305	95	59	95
2	124	225	64	106	99	183	224	101	45	305	95	59	107
2 ½	166	257	85	156	66	233	144	136	70		60		144
3	200	274	105	168	70	254	152	141	70		65		151
4	238	273	123	175	78	301	169	164	120		72		174

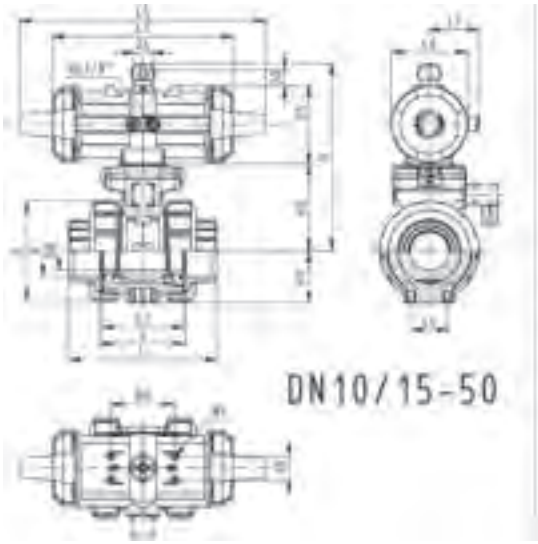

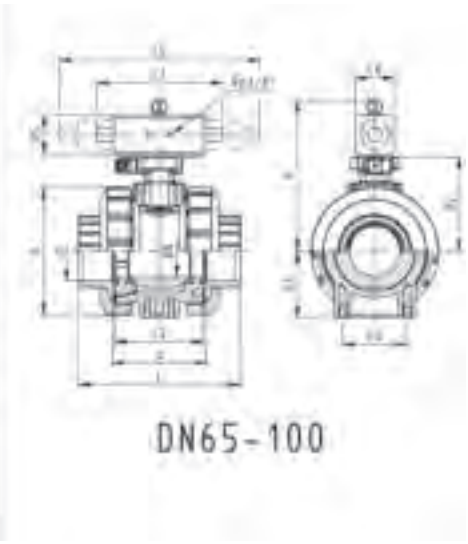



Ball valve type 230 PVC-U DA (Double acting)
Without manual override
With fixed flanges metric

Model:

- Built on with pneumatic actuator PA11 (DN10/15-25), PA21 (DN32-50)
- Control time 90°<) 1-2s
- For easy installation and removal
- Integrated stainless steel mounting inserts
- Overall length according to EN 558
- Connecting dimension: ISO 7005 / EN 1092 / DIN 25 PN10 / BS4504

Option:

- Individual configuration of the valve (see diagram)

d (mm)	Size (inch)	DN (mm)	PN (bar)	kv-value (Δp=1 bar) (l/min)	EPDM Code	Weight (kg)	FPM Code	Weight (kg)
20	½	15	10	185	**199 230 343**	1.700	**199 230 353**	1.700
25	¾	20	10	350	**199 230 344**	1.900	**199 230 354**	1.900
32	1	25	10	700	**199 230 345**	2.100	**199 230 355**	2.100
40	1 ¼	32	10	1000	**199 230 346**	3.400	**199 230 356**	3.400
50	1 ½	40	10	1600	**199 230 347**	3.800	**199 230 357**	3.800
63	2	50	10	3100	**199 230 348**	4.900	**199 230 358**	4.900

d (mm)	D (mm)	H (mm)	H1 (mm)	H2 (mm)	H4 (mm)	H5 (mm)	H6 (mm)	L (mm)	L1 (mm)	L2 (mm)	L3 (mm)	L4 (mm)	L5 (mm)	L6 (mm)	L7 (mm)
20	50	159	27	62	40	77	48	124	194	56	130	25	261	76	48
25	58	168	30	71	40	77	53	144	194	65	150	25	261	76	48
32	68	168	36	71	40	77	58	154	194	71	160	25	261	76	48
40	84	202	44	84	51	99	70	174	224	85	180	45	305	95	59
50	97	202	51	84	51	99	75	194	224	89	200	45	305	95	59
63	124	225	64	106	51	99	83	224	224	101	230	45	305	95	59

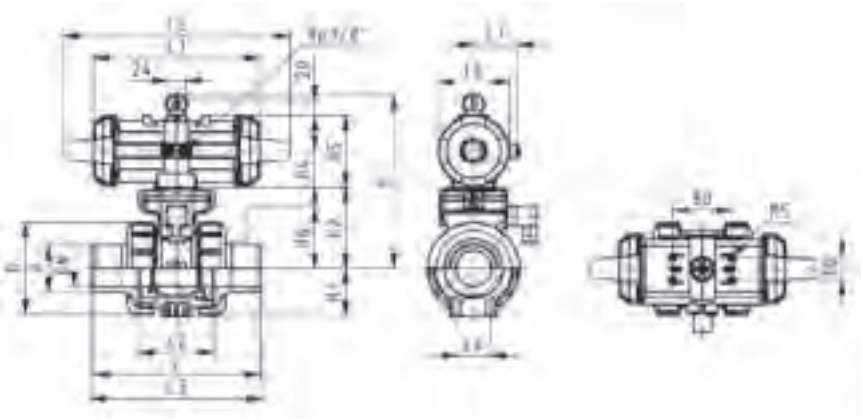



Ball valve type 230 PVC-U DA (Double acting)
Without manual override
With backing flanges PP-st metric

Model:

- Control time 90°<) 1-2s
- Assignment of actuators: PA11 (DN10/15-25), PA21 (DN32-50), PA35 (DN65), PA40 (DN80), PA45 (DN100)
- For easy installation and removal
- Integrated stainless steel mounting inserts
- Overall length according to EN 558
- Connecting dimension: ISO 7005, EN 1092, BS 4504, DIN 2501

Option:

- Individual configuration of the valve (see diagram)

d (mm)	DN (mm)	PN (bar)	kv-value (Δp=1 bar) (l/min)	EPDM Code	Weight (kg)	FPM Code	Weight (kg)
75	65	10	5000	**199 234 509**	10.800	**199 234 519**	10.800
90	80	10	7000	**199 234 510**	14.600	**199 234 520**	14.600
110	100	10	11000	**199 234 511**	20.600	**199 234 521**	20.600

d (mm)	D (mm)	H (mm)	H1 (mm)	H2 (mm)	H5 (mm)	H6 (mm)	L (mm)	L1 (mm)	L2 (mm)	L3 (mm)	L4 (mm)	L6 (mm)
75	166	257	85	156	66	93	284	144	136	290	70	60
90	200	274	105	168	70	100	300	152	141	310	70	65
110	238	273	123	175	78	110	340	169	164	350	120	72

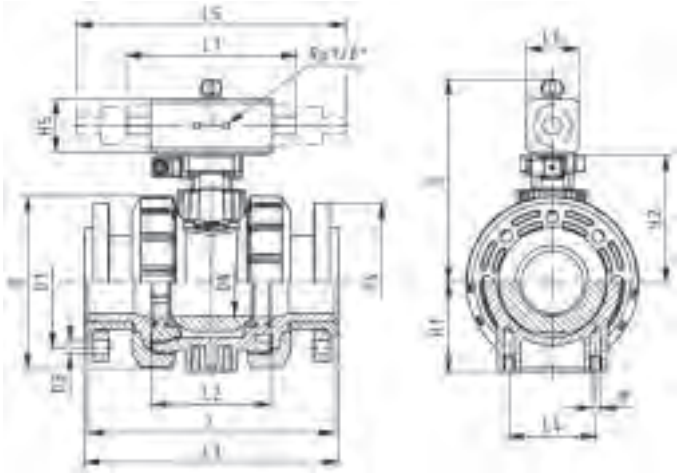

Product Configurator

Create your own actuator

Pneumatic Actuator	
P01	PA 11/21 Fail safe to close (FC)
P02	PA 11/21 Fail safe to open (FO)
P03	PA 11/21 Double acting (DA)
P30	PA 30/90 Fail safe to close (FC)
P31	PA 30/90 Fail safe to open (FO)
P32	PA 30/90 Double acting (DA)

Stroke Limiter	
---	without Stroke Limiter
R02	With Stroke Limiter

Accessories	
S01	Namur Mounting Bracket
S03	Limit Switch Unit with Switches Ag,Ni
S04	Limit Switch Unit with Switches Au
S05	Limit Switch Unit with Inductive Switches Namur Eexi
S06	Limit Switch Unit with Inductive Switches PNP
S07	Limit Switch Unit with Inductive Switches NPN
S08	Limit Switch Unit with Inductive Switches Namur Eexd

P01	S05	=



3-Way ball valves type 543



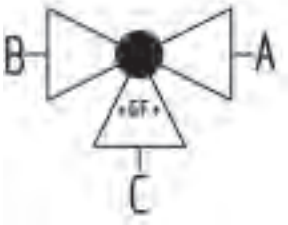



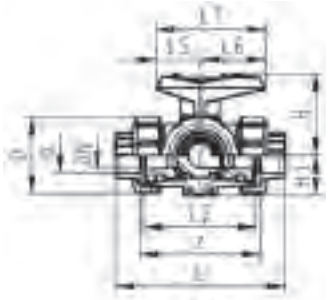

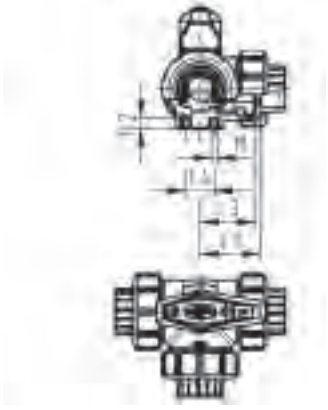

3-Way ball valve type 543 PVC-U
Horizontal/L-port
With solvent cement sockets metric

Model:

- For easy installation and removal (valve end and union nut are compatible with type 546)
- Ball seals PTFE
- Pneumatic or electric actuator available separately
- Angle of operation 360° without turn limiter
- Turn limiter 90° enclosed, in different positions usable as a clip-on ring
- Integrated stainless steel mounting inserts
- Delivery status A-C opened, see flow scheme

d (mm)	DN (mm)	PN (bar)	kv-value (Δp=1 bar) (l/min)	EPDM Code	Weight (kg)	FPM Code	Weight (kg)
16	10	10	50	**161 543 001**	0.245	**161 543 011**	0.245
20	15	10	75	**161 543 002**	0.230	**161 543 012**	0.251
25	20	10	150	**161 543 003**	0.339	**161 543 013**	0.361
32	25	10	280	**161 543 004**	0.526	**161 543 014**	0.551
40	32	10	480	**161 543 005**	0.912	**161 543 015**	0.938
50	40	10	620	**161 543 006**	1.600	**161 543 016**	1.388
63	50	10	1230	**161 543 007**	2.681	**161 543 017**	2.705

d (mm)	D (mm)	H (mm)	H1 (mm)	H2 (mm)	L (mm)	L1 (mm)	L2 (mm)	L3 (mm)	L4 (mm)	L5 (mm)	L6 (mm)	M	z (mm)	z1 (mm)	closest inch (inch)
16	50	57	28	8	109	77	73	36	25	32	45	6	81	40	⅜
20	50	57	28	8	112	77	73	36	25	32	45	6	81	40	½
25	58	67	32	8	131	97	86	43	25	39	58	6	94	47	¾
32	68	73	36	8	151	97	99	50	25	39	58	6	107	54	1
40	84	90	45	9	181	128	120	60	45	54	74	8	130	65	1 ¼
50	97	97	51	9	205	128	137	69	45	54	74	8	143	72	1 ½
63	124	116	65	9	261	152	179	89	45	66	87	8	185	92	2



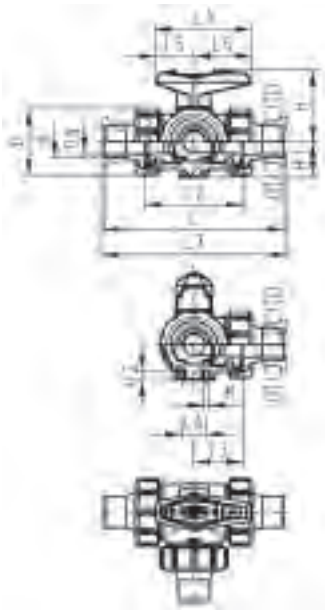

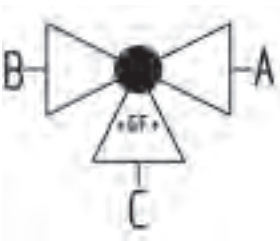



3-Way ball valve type 543 PVC-U
Horizontal/L-port
With solvent cement spigots metric

Model:

- For easy installation and removal (valve end and union nut are compatible with type 546)
- Ball seals PTFE
- Pneumatic or electric actuator available separately
- Angle of operation 360° without turn limiter
- Turn limiter 90° enclosed, in different positions usable as a clip-on ring
- Integrated stainless steel mounting inserts
- Delivery status A-C opened, see flow scheme

d (mm)	DN (mm)	PN (bar)	kv-value (Δp=1 bar) (l/min)	EPDM Code	Weight (kg)	FPM Code	Weight (kg)
16	10	10	50	**161 543 021**	0.251	**161 543 031**	0.251
20	15	10	75	**161 543 022**	0.260	**161 543 032**	0.260
25	20	10	150	**161 543 023**	0.376	**161 543 033**	0.376
32	25	10	280	**161 543 024**	0.546	**161 543 034**	0.575
40	32	10	480	**161 543 025**	0.959	**161 543 035**	0.959
50	40	10	620	**161 543 026**	1.429	**161 543 036**	1.453
63	50	10	1230	**161 543 027**	2.831	**161 543 037**	2.827

d (mm)	D (mm)	H (mm)	H1 (mm)	H2 (mm)	L (mm)	L1 (mm)	L2 (mm)	L3 (mm)	L4 (mm)	L5 (mm)	L6 (mm)	L7 (mm)	M	closest inch (inch)
16	50	57	28	8	131	77	73	36	25	32	45	137	6	⅜
20	50	57	28	8	141	77	73	36	25	32	45	147	6	½
25	58	67	32	8	165	97	86	43	25	39	58	171	6	¾
32	68	73	36	8	182	97	99	50	25	39	58	188	6	1
40	84	90	45	9	209	128	120	60	45	54	74	215	8	1 ¼
50	97	97	51	9	242	128	137	69	45	54	74	248	8	1 ½
63	124	116	65	9	302	152	179	89	45	66	87	308	8	2



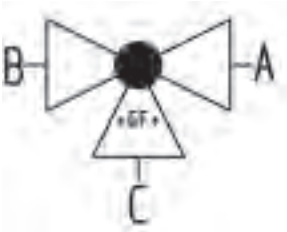



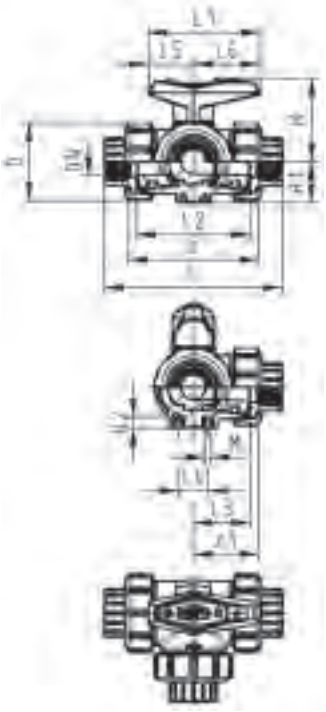

3-Way ball valve type 543 PVC-U
Horizontal/L-port
With threaded sockets Rp

Model:

- For easy installation and removal (valve end and union nut are compatible with type 546)
- Ball seals PTFE
- Pneumatic or electric actuator available separately
- Angle of operation 360° without turn limiter
- Turn limiter 90° enclosed, in different positions usable as a clip-on ring
- Integrated stainless steel mounting inserts
- Delivery status A-C opened, see flow scheme

Rp (inch)	DN (mm)	PN (bar)	kv-value (Δp=1 bar) (l/min)	EPDM Code	Weight (kg)	FPM Code	Weight (kg)
⅜	10	10	50	**161 543 041**	0.245	**161 543 051**	0.245
½	15	10	75	**161 543 042**	0.251	**161 543 052**	0.251
¾	20	10	150	**161 543 043**	0.361	**161 543 053**	0.361
1	25	10	280	**161 543 044**	0.551	**161 543 054**	0.551
1 ¼	32	10	480	**161 543 045**	0.938	**161 543 055**	0.938
1 ½	40	10	620	**161 543 046**	1.390	**161 543 056**	1.390
2	50	10	1230	**161 543 047**	2.705	**161 543 057**	2.705

Rp (inch)	D (mm)	H (mm)	H1 (mm)	H2 (mm)	L (mm)	L1 (mm)	L2 (mm)	L3 (mm)	L4 (mm)	L5 (mm)	L6 (mm)	M	z (mm)	z1 (mm)
⅜	50	57	28	8	113	77	73	36	25	32	45	6	87	43
½	50	57	28	8	117	77	73	36	25	32	45	6	85	42
¾	58	67	32	8	135	97	86	43	25	39	58	6	100	50
1	68	73	36	8	155	97	99	50	25	39	58	6	113	57
1 ¼	84	90	45	9	179	128	120	60	45	54	74	8	134	67
1 ½	97	97	51	9	201	128	137	69	45	54	74	8	155	78
2	124	116	65	9	255	152	179	89	45	66	87	8	199	99



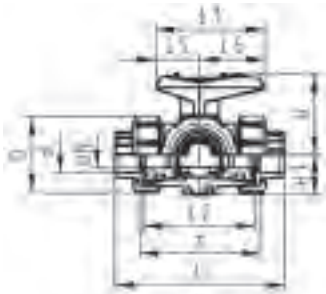

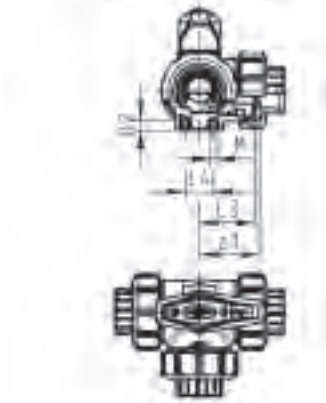

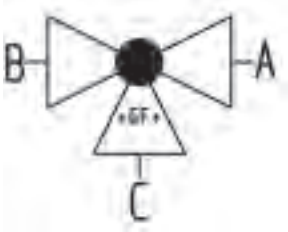



3-Way ball valve type 543 PVC-U
Horizontal/T-port
With solvent cement sockets metric

Model:

- For easy installation and removal (valve end and union nut are compatible with type 546)
- Ball seals PTFE
- Pneumatic or electric actuator available separately
- Angle of operation 360° without turn limiter
- Turn limiter 90° enclosed, in different positions usable as a clip-on ring
- Integrated stainless steel mounting inserts
- Delivery status A-B-C opened, see flow scheme

d (mm)	DN (mm)	PN (bar)	kv-value (Δp=1 bar) (l/min)	EPDM Code	FPM Code	Weight (kg)
16	10	10	140	**161 543 201**	**161 543 211**	0.244
20	15	10	200	**161 543 202**	**161 543 212**	0.250
25	20	10	470	**161 543 203**	**161 543 213**	0.359
32	25	10	793	**161 543 204**	**161 543 214**	0.544
40	32	10	1290	**161 543 205**	**161 543 215**	0.927
50	40	10	1910	**161 543 206**	**161 543 216**	1.369
63	50	10	3100	**161 543 207**	**161 543 217**	2.660

d (mm)	D (mm)	H (mm)	H1 (mm)	H2 (mm)	L (mm)	L1 (mm)	L2 (mm)	L3 (mm)	L4 (mm)	L5 (mm)	L6 (mm)	M	z (mm)	z1 (mm)	closest inch (inch)
16	50	57	28	8	109	77	73	36	25	32	45	6	81	40	⅜
20	50	57	28	8	112	77	73	36	25	32	45	6	81	40	½
25	58	67	32	8	131	97	86	43	25	39	58	6	94	47	¾
32	68	73	36	8	151	97	99	50	25	39	58	6	107	54	1
40	84	90	45	9	181	128	120	60	45	54	74	8	130	65	1 ¼
50	97	97	51	9	205	128	137	69	45	54	74	8	143	72	1 ½
63	124	116	65	9	261	152	179	89	45	66	87	8	185	92	2



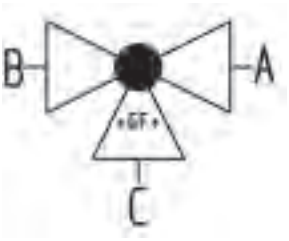



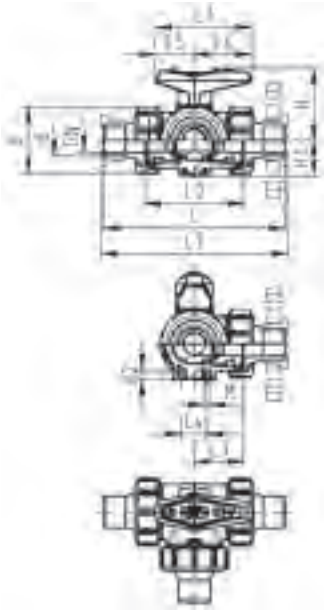

3-Way ball valve type 543 PVC-U
Horizontal/T-port
With solvent cement spigots metric

Model:

- For easy installation and removal (valve end and union nut are compatible with type 546)
- Ball seals PTFE
- Pneumatic or electric actuator available separately
- Angle of operation 360° without turn limiter
- Turn limiter 90° enclosed, in different positions usable as a clip-on ring
- Integrated stainless steel mounting inserts
- Delivery status A-B-C opened, see flow scheme

d (mm)	DN (mm)	PN (bar)	kv-value (Δp=1 bar) (l/min)	EPDM Code	Weight (kg)	FPM Code	Weight (kg)
16	10	10	140	**161 543 221**	0.250	**161 543 231**	0.250
20	15	10	200	**161 543 222**	0.259	**161 543 232**	0.259
25	20	10	470	**161 543 223**	0.374	**161 543 233**	0.374
32	25	10	793	**161 543 224**	0.568	**161 543 234**	0.568
40	32	10	1290	**161 543 225**	0.948	**161 543 235**	0.948
50	40	10	1910	**161 543 226**	1.432	**161 543 236**	1.432
63	50	10	3100	**161 543 227**	2.747	**161 543 237**	2.786

d (mm)	D (mm)	H (mm)	H1 (mm)	H2 (mm)	L (mm)	L1 (mm)	L2 (mm)	L3 (mm)	L4 (mm)	L5 (mm)	L6 (mm)	L7 (mm)	M	closest inch (inch)
16	50	57	28	8	131	77	73	36	25	32	45	137	6	⅜
20	50	57	28	8	141	77	73	36	25	32	45	147	6	½
25	58	67	32	8	165	97	86	43	25	39	58	171	6	¾
32	68	73	36	8	182	97	99	50	25	39	58	188	6	1
40	84	90	45	9	209	128	120	60	45	54	74	215	8	1 ¼
50	97	97	51	9	242	128	137	69	45	54	74	248	8	1 ½
63	124	116	65	9	302	152	179	89	45	66	87	308	8	2



3-Way ball valve type 543 PVC-U
Horizontal/T-port
With threaded sockets Rp

Model:

- For easy installation and removal (valve end and union nut are compatible with type 546)
- Ball seals PTFE
- Pneumatic or electric actuator available separately
- Angle of operation 360° without turn limiter
- Turn limiter 90° enclosed, in different positions usable as a clip-on ring
- Integrated stainless steel mounting inserts
- Delivery status A-B-C opened, see flow scheme

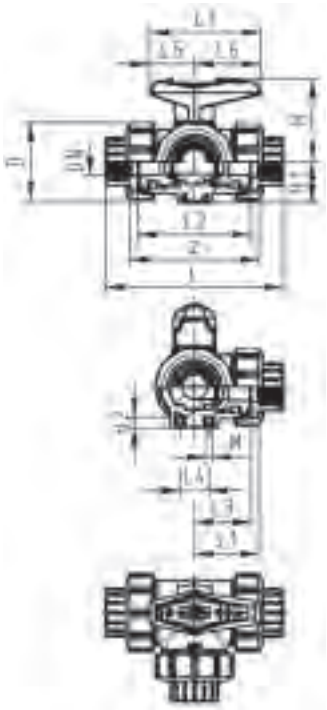

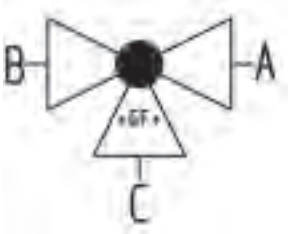

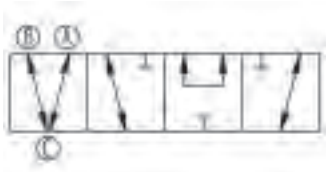

Rp (inch)	DN (mm)	PN (bar)	kv-value (Δp=1 bar) (l/min)	EPDM Code	Weight (kg)	FPM Code	Weight (kg)
⅜	10	10	140	**161 543 241**	0.244	**161 543 251**	0.244
½	15	10	200	**161 543 242**	0.250	**161 543 252**	0.250
¾	20	10	470	**161 543 243**	0.359	**161 543 253**	0.359
1	25	10	793	**161 543 244**	0.544	**161 543 254**	0.544
1 ¼	32	10	1290	**161 543 245**	0.927	**161 543 255**	0.927
1 ½	40	10	1910	**161 543 246**	1.386	**161 543 256**	1.400
2	50	10	3100	**161 543 247**	2.660	**161 543 257**	2.660

Rp (inch)	D (mm)	H (mm)	H1 (mm)	H2 (mm)	L (mm)	L1 (mm)	L2 (mm)	L3 (mm)	L4 (mm)	L5 (mm)	L6 (mm)	M	z (mm)	z1 (mm)
⅜	50	57	28	8	113	77	73	36	25	32	45	6	87	43
½	50	57	28	8	117	77	73	36	25	32	45	6	85	42
¾	58	67	32	8	135	97	86	43	25	39	58	6	100	50
1	68	73	36	8	155	97	99	50	25	39	58	6	113	57
1 ¼	84	90	45	9	179	128	120	60	45	54	74	8	134	67
1 ½	97	97	51	9	201	128	137	69	45	54	74	8	155	78
2	124	116	65	9	255	152	179	89	45	66	87	8	199	99



3-Way ball valve type 543 PVC-U
Vertical/L-port
With solvent cement sockets metric

Model:

- Vertical inlet solvent cement spigot metric
- Easy installation and removal using union on third outlet
- Ball seals PTFE
- Electric actuator available separately
- Angle of operation 360° without turn limiter
- Delivery status B-C opened, see flow scheme

Mode of action:

- For interconnection of two inputs

Individual configuration available on special request

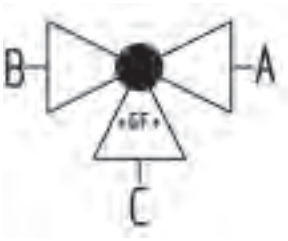

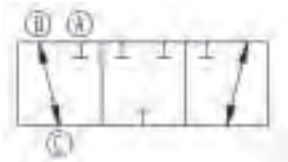

d (mm)	DN (mm)	PN (bar)	kv-value (Δp=1 bar) (l/min)	EPDM Code	FPM Code	Weight (kg)
16	10	10	49	**161 543 401**	**161 543 411**	0.162
20	15	10	77	**161 543 402**	**161 543 412**	0.166
25	20	10	146	**161 543 403**	**161 543 413**	0.255
32	25	10	260	**161 543 404**	**161 543 414**	0.372
40	32	10	437	**161 543 405**	**161 543 415**	0.622
50	40	10	667	**161 543 406**	**161 543 416**	0.886
63	50	10	1293	**161 543 407**	**161 543 417**	1.617

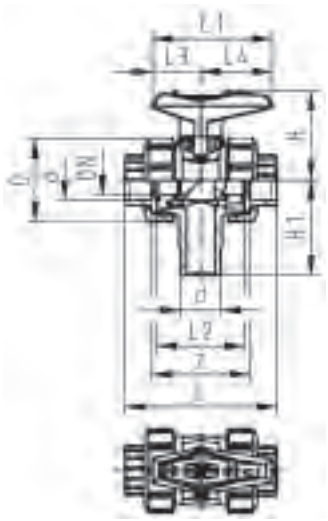

d (mm)	D (mm)	H (mm)	H1 (mm)	L (mm)	L1 (mm)	L2 (mm)	L3 (mm)	L4 (mm)	z (mm)	closest inch (inch)
16	50	57	62	92	77	56	32	45	64	⅜
20	50	57	62	95	77	56	32	45	64	½
25	58	67	72	111	97	66	39	58	74	¾
32	68	73	77	123	97	71	39	58	79	1
40	84	90	87	146	128	85	54	74	95	1 ¼
50	97	97	97	157	128	89	54	74	95	1 ½
63	124	116	112	183	152	101	66	87	107	2



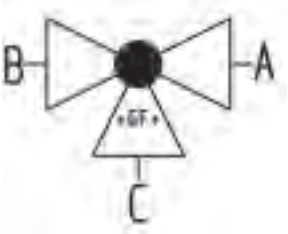

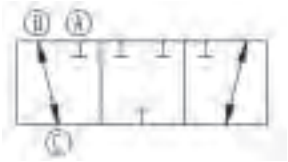

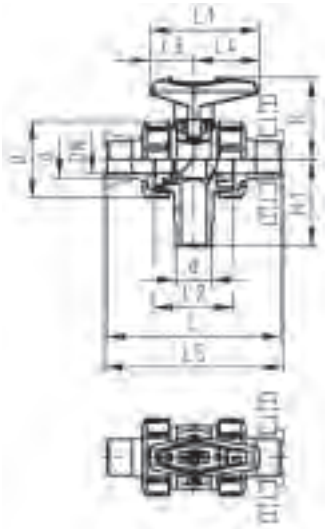

3-Way ball valve type 543 PVC-U
Vertical/L-port
With solvent cement spigots metric

Model:

- Vertical inlet solvent cement spigot metric
- Easy installation and removal using union on third outlet
- Ball seals PTFE
- Electric actuator available separately
- Angle of operation 360° without turn limiter
- Delivery status B-C opened, see flow scheme

Mode of action:

- For interconnection of two inputs

d (mm)	DN (mm)	PN (bar)	kv-value (Δp=1 bar) (l/min)	EPDM Code	Weight (kg)	FPM Code	Weight (kg)
16	10	10	49	**161 543 441**	0.166	**161 543 451**	0.166
20	15	10	77	**161 543 442**	0.172	**161 543 452**	0.172
25	20	10	146	**161 543 443**	0.265	**161 543 453**	0.265
32	25	10	260	**161 543 444**	0.388	**161 543 454**	0.388
40	32	10	437	**161 543 445**	0.637	**161 543 455**	0.636
50	40	10	667	**161 543 446**	0.917	**161 543 456**	0.928
63	50	10	1293	**161 543 447**	1.701	**161 543 457**	1.701

d (mm)	D (mm)	H (mm)	H1 (mm)	L (mm)	L1 (mm)	L2 (mm)	L3 (mm)	L4 (mm)	L5 (mm)	closest inch (inch)
16	50	57	62	114	77	56	32	45	120	⅜
20	50	57	62	124	77	56	32	45	130	½
25	58	67	72	144	97	66	39	58	150	¾
32	68	73	77	154	97	71	39	58	160	1
40	84	90	87	174	128	85	54	74	180	1 ¼
50	97	97	97	194	128	89	54	74	200	1 ½
63	124	116	112	224	152	101	66	87	230	2



3-Way ball valve type 543 PVC-U
Vertical/L-port
With threaded sockets Rp

Model:

- Vertical inlet solvent cement spigot metric
- Easy installation and removal using union on third outlet
- Ball seals PTFE
- Electric actuator available separately
- Angle of operation 360° without turn limiter
- Delivery status B-C opened, see flow scheme

Mode of action:

- For interconnection of two inputs

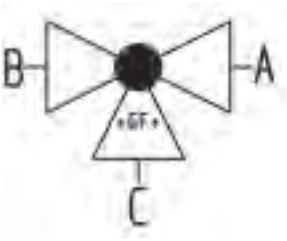

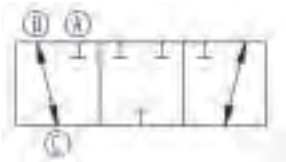

Rp (inch)	DN (mm)	PN (bar)	kv-value (Δp=1 bar) (l/min)	EPDM Code	FPM Code	Weight (kg)
⅜	10	10	49	**161 543 421**	**161 543 431**	0.162
½	15	10	77	**161 543 422**	**161 543 432**	0.166
¾	20	10	146	**161 543 423**	**161 543 433**	0.255
1	25	10	260	**161 543 424**	**161 543 434**	0.372
1 ¼	32	10	437	**161 543 425**	**161 543 435**	0.622
1 ½	40	10	667	**161 543 426**	**161 543 436**	0.886
2	50	10	1293	**161 543 427**	**161 543 437**	1.617

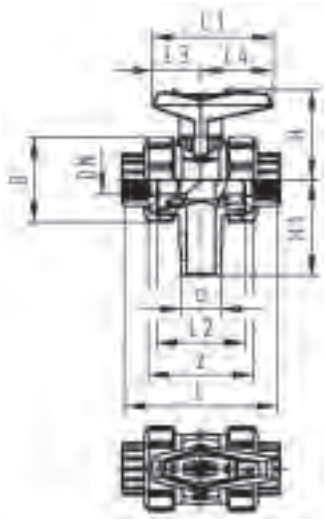

Rp (inch)	D (mm)	H (mm)	H1 (mm)	L (mm)	L1 (mm)	L2 (mm)	L3 (mm)	L4 (mm)	z (mm)
⅜	50	57	62	96	77	56	32	45	69
½	50	57	62	99	77	56	32	45	67
¾	58	67	72	115	97	66	39	58	78
1	68	73	77	127	97	71	39	58	85
1 ¼	84	90	87	144	128	85	54	74	100
1 ½	97	97	97	153	128	89	54	74	106
2	124	116	112	177	152	101	66	87	121



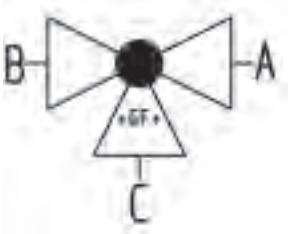



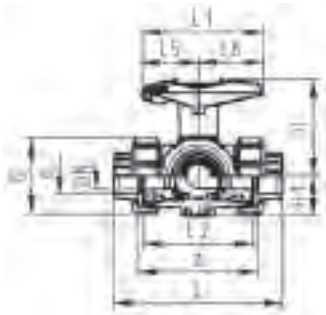

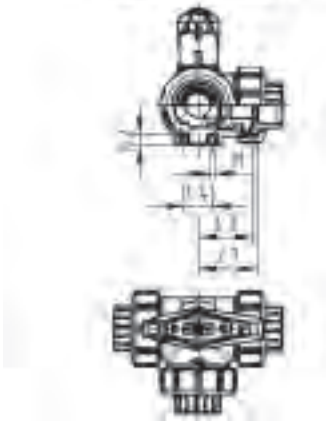

3-Way ball valve type 543 PVC-U
Horizontal/L-port
With lockable handle
With solvent cement sockets metric

Model:

- For easy installation and removal (valve end and union nut are compatible with type 546)
- Ball seals PTFE
- Pneumatic or electric actuator available separately
- Angle of operation 360° without turn limiter
- Integrated stainless steel mounting inserts
- Multifunctional lever red with ratched setting 45°, lockable
- Delivery status A-C opened, see flow scheme

d (mm)	DN (mm)	PN (bar)	kv-value (Δp=1 bar) (l/min)	EPDM Code	Weight (kg)	FPM Code	Weight (kg)
16	10	10	50	**161 543 161**	0.259	**161 543 171**	0.259
20	15	10	75	**161 543 162**	0.265	**161 543 172**	0.265
25	20	10	150	**161 543 163**	0.378	**161 543 173**	0.378
32	25	10	280	**161 543 164**	0.568	**161 543 174**	0.568
40	32	10	480	**161 543 165**	0.961	**161 543 175**	0.961
50	40	10	620	**161 543 166**	1.413	**161 543 176**	1.413
63	50	10	1230	**161 543 167**	2.736	**161 543 177**	2.736

d (mm)	D (mm)	H (mm)	H1 (mm)	H2 (mm)	L (mm)	L1 (mm)	L2 (mm)	L3 (mm)	L4 (mm)	L5 (mm)	L6 (mm)	M	z (mm)	z1 (mm)	closest inch (inch)
16	50	79	28	8	109	87	73	36	25	42	45	6	81	40	⅜
20	50	79	28	8	112	87	73	36	25	42	45	6	81	40	½
25	58	88	32	8	131	108	86	43	25	50	58	6	94	47	¾
32	68	94	36	8	151	108	99	50	25	50	58	6	107	54	1
40	84	113	45	9	181	141	120	60	45	66	75	8	130	65	1 ¼
50	97	119	51	9	205	141	137	69	45	66	75	8	143	72	1 ½
63	124	141	65	9	261	165	179	89	45	78	87	8	185	92	2



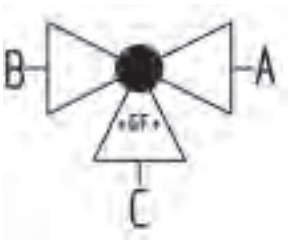



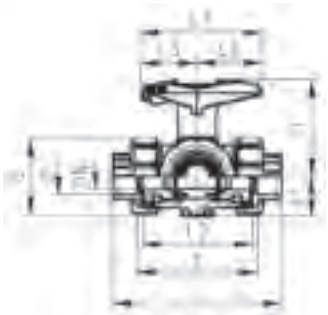

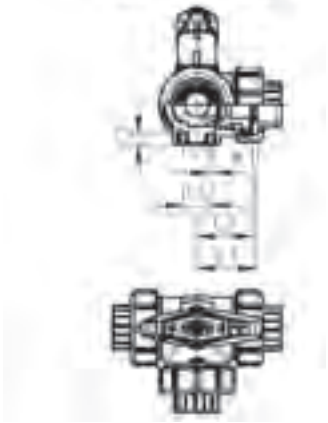

3-Way ball valve type 543 PVC-U
Horizontal/T-port
With lockable handle
With solvent cement sockets metric

Model:

- For easy installation and removal (valve end and union nut are compatible with type 546)
- Ball seals PTFE
- Pneumatic or electric actuator available separately
- Angle of operation 360° without turn limiter
- Turn limiter 90° enclosed, in different positions usable as a clip-on ring
- Integrated stainless steel mounting inserts
- Multifunctional lever red with ratched setting 45°, lockable
- Delivery status A-B-C opened, see flow scheme

d (mm)	DN (mm)	PN (bar)	kv-value (Δp=1 bar) (l/min)	EPDM Code	Weight (kg)	FPM Code	Weight (kg)
16	10	10	140	**161 543 361**	0.235	**161 543 371**	0.258
20	15	10	200	**161 543 362**	0.229	**161 543 372**	0.264
25	20	10	470	**161 543 363**	0.360	**161 543 373**	0.376
32	25	10	793	**161 543 364**	0.561	**161 543 374**	0.561
40	32	10	1290	**161 543 365**	0.950	**161 543 375**	0.950
50	40	10	1910	**161 543 366**	1.392	**161 543 376**	1.392
63	50	10	3100	**161 543 367**	2.691	**161 543 377**	2.691

d (mm)	D (mm)	H (mm)	H1 (mm)	H2 (mm)	L (mm)	L1 (mm)	L2 (mm)	L3 (mm)	L4 (mm)	L5 (mm)	L6 (mm)	M	z (mm)	z1 (mm)	closest inch (inch)
16	50	79	28	8	109	87	73	36	25	42	45	6	81	40	⅜
20	50	79	28	8	112	87	73	36	25	42	45	6	81	40	½
25	58	88	32	8	131	108	86	43	25	50	58	6	94	47	¾
32	68	94	36	8	151	108	99	50	25	50	58	6	107	54	1
40	84	113	45	9	181	141	120	60	45	66	75	8	130	65	1 ¼
50	97	119	51	9	205	141	137	69	45	66	75	8	143	72	1 ½
63	124	141	65	9	261	165	179	89	45	78	87	8	185	92	2



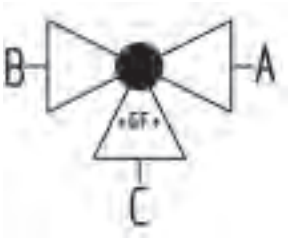

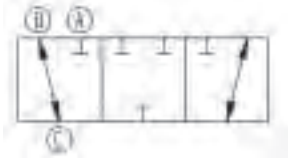

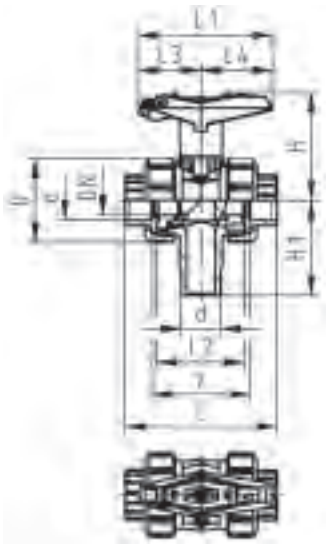

3-Way ball valve type 543 PVC-U
Vertical/L-port
With lockable handle
With solvent cement sockets metric

Model:

- Vertical inlet solvent cement spigot metric
- Easy installation and removal using union on third outlet
- Ball seals PTFE
- Electric actuator available separately
- Angle of operation 360° without turn limiter
- Multifunctional lever red with ratched setting 45°, lockable
- Delivery status B-C opened, see flow scheme

Mode of action:

- For interconnection of two inputs

d (mm)	DN (mm)	PN (bar)	kv-value (Δp=1 bar) (l/min)	EPDM Code	FPM Code	Weight (kg)
16	10	10	49	**161 543 501**	**161 543 511**	0.185
20	15	10	77	**161 543 502**	**161 543 512**	0.189
25	20	10	146	**161 543 503**	**161 543 513**	0.281
32	25	10	260	**161 543 504**	**161 543 514**	0.398
40	32	10	437	**161 543 505**	**161 543 515**	0.663
50	40	10	667	**161 543 506**	**161 543 516**	0.927
63	50	10	1293	**161 543 507**	**161 543 517**	1.666

d (mm)	D (mm)	H (mm)	H1 (mm)	L (mm)	L1 (mm)	L2 (mm)	L3 (mm)	L4 (mm)	z (mm)	closest inch (inch)
16	50	79	62	92	87	56	42	45	64	⅜
20	50	79	62	95	87	56	42	45	64	½
25	58	88	72	111	108	66	50	58	74	¾
32	68	94	77	123	108	71	50	58	79	1
40	84	113	87	146	140	85	66	74	95	1 ¼
50	97	119	97	157	140	89	66	74	95	1 ½
63	124	141	112	183	165	101	78	87	107	2

3-Way ball valves electric type 167



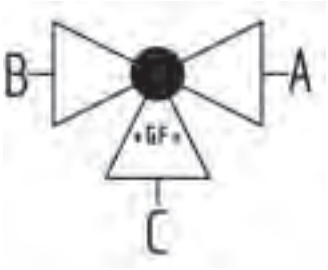



3-Way ball valve type 167 PVC-U
Horizontal/L-port 100-230V
With manual emergency override
With solvent cement sockets metric

Model:

- Voltage 100-230 V, 50-60 Hz
- Factory set control range 90°<)
- Basic position A-C opened, activated position B-C opened, see flow scheme
- Other positions possible by adjusting the limit switches
- Heating element, position feedback (Open/Close/ Middle)
- Integrated stainless steel mounting inserts

Option:

- Optional accessories: Fail-safe return unit, Monitoring board, Position controller, Profibus DP board

d (mm)	DN (mm)	PN (bar)	kv-value (Δp=1 bar) (l/min)	EA	EPDM Code	Weight (kg)	FPM Code	Weight (kg)
16	10	10	50	EA25	**199 167 022**	2.122	**199 167 032**	2.122
20	15	10	75	EA25	**199 167 023**	2.540	**199 167 033**	2.128
25	20	10	150	EA25	**199 167 024**	2.256	**199 167 034**	2.256
32	25	10	280	EA25	**199 167 025**	2.842	**199 167 035**	2.446
40	32	10	480	EA25	**199 167 026**	3.234	**199 167 036**	2.870
50	40	10	620	EA25	**199 167 027**	3.683	**199 167 037**	3.322
63	50	10	1230	EA25	**199 167 028**	5.043	**199 167 038**	4.683

d (mm)	D (mm)	H (mm)	H1 (mm)	H2 (mm)	H3 (mm)	H5 (mm)	H6 (mm)	L (mm)	L1 (mm)	L2 (mm)	L3 (mm)	L4 (mm)	L5 (mm)	L6 (mm)	L7 (mm)
16	50	231	28	64	94	167	8	109	180	73	36	25	97	83	122
20	50	231	28	64	94	167	8	112	180	73	36	25	97	83	122
25	58	240	32	73	94	167	8	131	180	86	43	25	97	83	122
32	68	240	36	73	94	167	8	151	180	99	50	25	97	83	122
40	84	251	45	84	94	167	9	181	180	120	60	45	97	83	122
50	97	251	51	84	94	167	9	205	180	137	69	45	97	83	122
63	124	273	65	106	94	167	9	261	180	179	89	45	97	83	122

d (mm)	L8 (mm)	M	z (mm)	z1 (mm)	closest inch (inch)
16	33	6	81	40	⅜
20	33	6	81	40	½
25	33	6	94	47	¾
32	33	6	107	54	1
40	33	8	130	65	1 ¼
50	33	8	143	72	1 ½
63	33	8	185	92	2

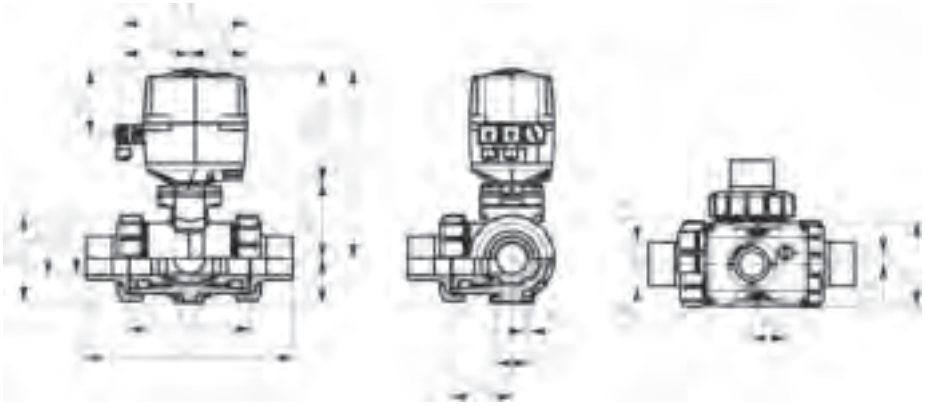



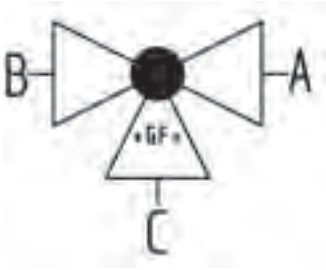



3-Way ball valve type 167 PVC-U
Horizontal/L-port 100-230V
With manual emergency override
With solvent cement spigots metric

Model:

- Voltage 100-230 V, 50-60 Hz
- Factory set control range 90°<)
- Basic position A-C opened, activated position B-C opened, see flow scheme
- Other positions possible by adjusting the limit switches
- Heating element, position feedback (Open/Close/ Middle)
- Integrated stainless steel mounting inserts

Option:

- Optional accessories: Fail-safe return unit, Monitoring board, Position controller, Profibus DP board

d (mm)	DN (mm)	PN (bar)	kv-value (Δp=1 bar) (l/min)	EA	EPDM Code	Weight (kg)	FPM Code	Weight (kg)
16	10	10	50	EA25	**199 167 002**	2.128	**199 167 012**	2.128
20	15	10	75	EA25	**199 167 003**	2.137	**199 167 013**	2.137
25	20	10	150	EA25	**199 167 004**	2.271	**199 167 014**	2.271
32	25	10	280	EA25	**199 167 005**	2.470	**199 167 015**	2.470
40	32	10	480	EA25	**199 167 006**	2.891	**199 167 016**	2.891
50	40	10	620	EA25	**199 167 007**	3.749	**199 167 017**	3.385
63	50	10	1230	EA25	**199 167 008**	4.809	**199 167 018**	4.809

d (mm)	D (mm)	H (mm)	H1 (mm)	H2 (mm)	H3 (mm)	H5 (mm)	H6 (mm)	L (mm)	L1 (mm)	L2 (mm)	L3 (mm)	L4 (mm)	L5 (mm)	L6 (mm)	L7 (mm)
16	50	231	28	64	94	167	8	131	180	194	36	25	97	83	122
20	50	231	28	64	94	167	8	141	180	194	36	25	97	83	122
25	58	240	32	73	94	167	8	165	180	194	43	25	97	83	122
32	68	240	36	73	94	167	8	182	180	194	50	25	97	83	122
40	84	251	45	84	94	167	9	209	180	194	60	45	97	83	122
50	97	251	51	84	94	167	9	242	180	194	69	45	97	83	122
63	124	273	65	106	94	167	9	302	180	194	89	45	97	83	122

d (mm)	L8 (mm)	M	closest inch (inch)
16	33	6	⅜
20	33	6	½
25	33	6	¾
32	33	6	1
40	33	8	1 ¼
50	33	8	1 ½
63	33	8	2

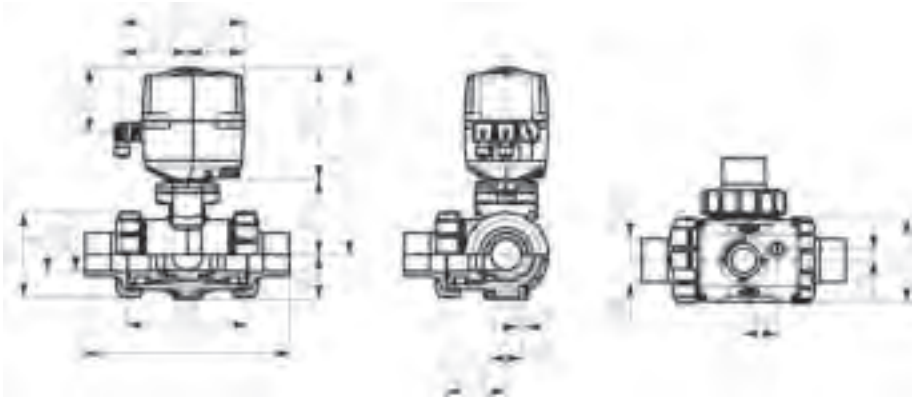



3-Way ball valve type 167 PVC-U
Horizontal/T-port 100-230V
With manual emergency override
With solvent cement sockets metric

Model:

- Voltage 100-230 V, 50-60 Hz
- Factory set control range 90°<)
- Basic position A-B-C opened, activated position B-C opened, see flow scheme
- Other positions possible by adjusting the limit switches
- Heating element, position feedback (Open/Close/ Middle)
- Integrated stainless steel mounting inserts

Option:

- Optional accessories: Fail-safe return unit, Monitoring board, Position controller, Profibus DP board

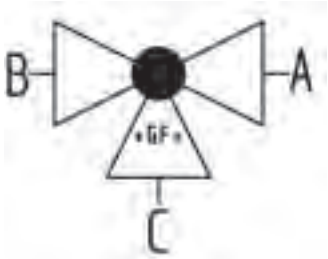



d (mm)	DN (mm)	PN (bar)	kv-value (Δp=1 bar) (l/min)	EA	EPDM Code	Weight (kg)	FPM Code	Weight (kg)
16	10	10	140	EA25	**199 167 062**	2.121	**199 167 072**	2.121
20	15	10	200	EA25	**199 167 063**	2.127	**199 167 073**	2.127
25	20	10	470	EA25	**199 167 064**	2.254	**199 167 074**	2.254
32	25	10	793	EA25	**199 167 065**	2.834	**199 167 075**	2.846
40	32	10	1290	EA25	**199 167 066**	3.217	**199 167 076**	2.859
50	40	10	1910	EA25	**199 167 067**	3.674	**199 167 077**	3.301
63	50	10	3100	EA25	**199 167 068**	4.638	**199 167 078**	4.638

d (mm)	D (mm)	H (mm)	H1 (mm)	H2 (mm)	H3 (mm)	H5 (mm)	H6 (mm)	L (mm)	L1 (mm)	L2 (mm)	L3 (mm)	L4 (mm)	L5 (mm)	L6 (mm)	L7 (mm)
16	50	231	28	64	94	167	8	109	180	73	36	25	97	83	122
20	50	231	28	64	94	167	8	112	180	73	36	25	97	83	122
25	58	240	32	73	94	167	8	131	180	86	43	25	97	83	122
32	68	240	36	73	94	167	8	151	180	99	50	25	97	83	122
40	84	251	45	84	94	167	9	181	180	120	60	45	97	83	122
50	97	251	51	84	94	167	9	205	180	137	69	45	97	83	122
63	124	273	65	106	94	167	9	261	180	179	89	45	97	83	122

d (mm)	L8 (mm)	M	z (mm)	z1 (mm)	closest inch (inch)
16	33	6	81	40	⅜
20	33	6	81	40	½
25	33	6	94	47	¾
32	33	6	107	54	1
40	33	8	130	65	1 ¼
50	33	8	143	72	1 ½
63	33	8	185	92	2

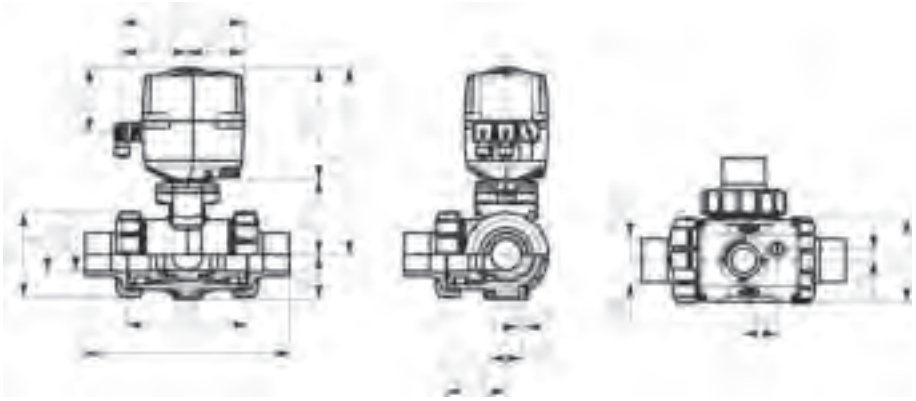



3-Way ball valve type 167 PVC-U
Horizontal/T-port 100-230V
With manual emergency override
With solvent cement sockets metric

Model:

- Voltage 100-230 V, 50-60 Hz
- Factory set control range 90°<)
- Basic position A-B-C opened, activated position B-C opened, see flow scheme
- Other positions possible by adjusting the limit switches
- Heating element, position feedback (Open/Close/ Middle)
- Integrated stainless steel mounting inserts

Option:

- Optional accessories: Fail-safe return unit, Monitoring board, Position controller, Profibus DP board

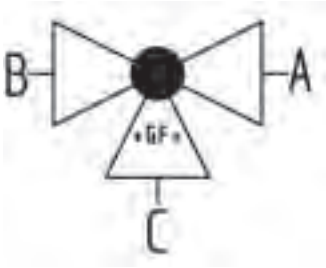



d (mm)	DN (mm)	PN (bar)	kv-value (Δp=1 bar) (l/min)	EA	EPDM Code	Weight (kg)	FPM Code	Weight (kg)
16	10	10	140	EA25	**199 167 202**	2.122	**199 167 212**	2.122
20	15	10	200	EA25	**199 167 203**	2.128	**199 167 213**	2.128
25	20	10	470	EA25	**199 167 204**	2.256	**199 167 214**	2.256
32	25	10	793	EA25	**199 167 205**	2.446	**199 167 215**	2.446
40	32	10	1290	EA25	**199 167 206**	2.870	**199 167 216**	2.870
50	40	10	1910	EA25	**199 167 207**	3.698	**199 167 217**	3.322
63	50	10	3100	EA25	**199 167 208**	5.018	**199 167 218**	4.683

d (mm)	D (mm)	H (mm)	H1 (mm)	H2 (mm)	H3 (mm)	H5 (mm)	H6 (mm)	L (mm)	L1 (mm)	L2 (mm)	L3 (mm)	L4 (mm)	L5 (mm)	L6 (mm)	L7 (mm)
16	50	231	28	64	94	167	8	109	180	73	36	25	97	83	122
20	50	231	28	64	94	167	8	112	180	73	36	25	97	83	122
25	58	240	32	73	94	167	8	131	180	86	43	25	97	83	122
32	68	240	36	73	94	167	8	151	180	99	50	25	97	83	122
40	84	251	45	84	94	167	9	181	180	120	60	45	97	83	122
50	97	251	51	84	94	167	9	205	180	137	69	45	97	83	122
63	124	273	65	106	94	167	9	261	180	179	89	45	97	83	122

d (mm)	L8 (mm)	M	z (mm)	z1 (mm)	closest inch (inch)
16	33	6	81	40	⅜
20	33	6	81	40	½
25	33	6	94	47	¾
32	33	6	107	54	1
40	33	8	130	65	1 ¼
50	33	8	143	72	1 ½
63	33	8	185	92	2

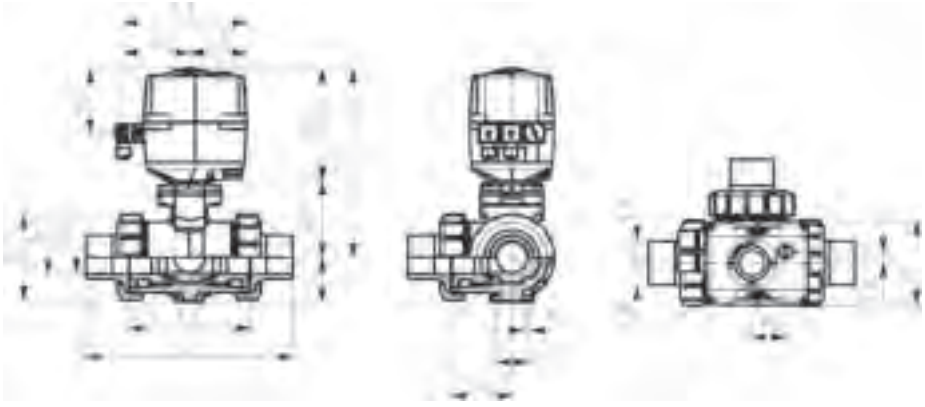



3-Way ball valve type 167 PVC-U
Horizontal/T-port 24V
With manual emergency override
With solvent cement sockets metric

Model:

- Voltage 24 V AC/DC
- Factory set control range 90°<)
- Basic position A-B-C opened, activated position B-C opened, see flow scheme
- Other positions possible by adjusting the limit switches
- Heating element, position feedback (Open/Close/ Middle)
- Integrated stainless steel mounting inserts

Option:

- Optional accessories: Fail-safe return unit, Monitoring board, Position controller, Profibus DP board

d (mm)	DN (mm)	PN (bar)	kv-value (Δp=1 bar) (l/min)	EA	EPDM Code	Weight (kg)	FPM Code	Weight (kg)
16	10	10	140	EA25	**199 167 242**	2.121	**199 167 252**	2.121
20	15	10	200	EA25	**199 167 243**	2.127	**199 167 253**	2.127
25	20	10	470	EA25	**199 167 244**	2.254	**199 167 254**	2.254
32	25	10	793	EA25	**199 167 245**	2.817	**199 167 255**	2.439
40	32	10	1290	EA25	**199 167 246**	3.197	**199 167 256**	2.859
50	40	10	1910	EA25	**199 167 247**	3.654	**199 167 257**	3.301
63	50	10	3100	EA25	**199 167 248**	4.972	**199 167 258**	4.638

d (mm)	D (mm)	H (mm)	H1 (mm)	H2 (mm)	H3 (mm)	H5 (mm)	H6 (mm)	L (mm)	L1 (mm)	L2 (mm)	L3 (mm)	L4 (mm)	L5 (mm)	L6 (mm)	L7 (mm)
16	50	231	28	64	94	167	8	109	180	73	36	25	97	83	122
20	50	231	28	64	94	167	8	112	180	73	36	25	97	83	122
25	58	240	32	73	94	167	8	131	180	86	43	25	97	83	122
32	68	240	36	73	94	167	8	151	180	99	50	25	97	83	122
40	84	251	45	84	94	167	9	181	180	120	60	45	97	83	122
50	97	251	51	84	94	167	9	205	180	137	69	45	97	83	122
63	124	273	65	106	94	167	9	261	180	179	89	45	97	83	122

d (mm)	L8 (mm)	M	z (mm)	z1 (mm)	closest inch (inch)
16	33	6	81	40	⅜
20	33	6	81	40	½
25	33	6	94	47	¾
32	33	6	107	54	1
40	33	8	130	65	1 ¼
50	33	8	143	72	1 ½
63	33	8	185	92	2

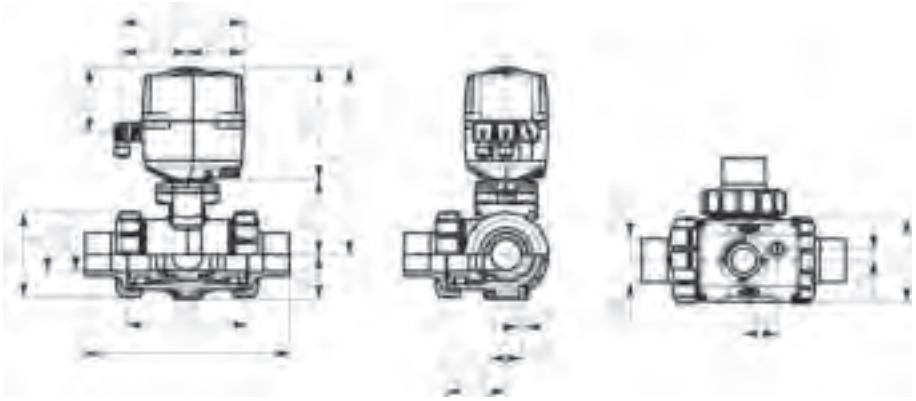

3-Way ball valves electric type 170



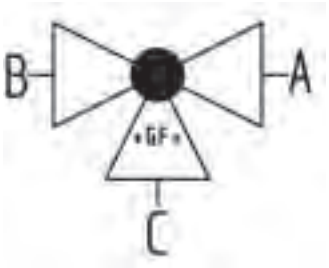

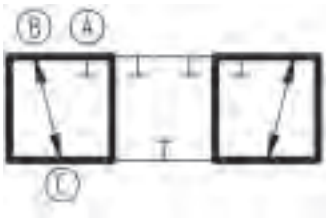

3-Way ball valve type 170 PVC-U
Vertical/L-port 100-230V
With manual emergency override
With solvent cement sockets metric

Model:

- Voltage 100-230 V, 50-60 Hz
- Factory set control range 90°<)
- Basic position B-C opened, activated position A-C opened, see flow scheme
- Other positions possible by adjusting the limit switches
- Heating element, position feedback (Open/Close/ Middle)
- Integrated stainless steel mounting inserts

Option:

- Optional accessories: Fail-safe return unit, Monitoring board, Position controller, Profibus DP board

d (mm)	DN (mm)	PN (bar)	kv-value (Δp=1 bar) (l/min)	EA	EPDM Code	Weight (kg)	FPM Code	Weight (kg)
16	10	10	49	EA25	**199 170 242**	2.039	**199 170 252**	2.039
20	15	10	77	EA25	**199 170 243**	2.043	**199 170 253**	2.043
25	20	10	146	EA25	**199 170 244**	2.150	**199 170 254**	2.150
32	25	10	260	EA25	**199 170 245**	2.267	**199 170 255**	2.267
40	32	10	437	EA25	**199 170 246**	2.554	**199 170 256**	2.554
50	40	10	667	EA25	**199 170 247**	3.203	**199 170 257**	2.818
63	50	10	1293	EA25	**199 170 248**	3.977	**199 170 258**	3.595

d (mm)	D (mm)	H (mm)	H1 (mm)	H2 (mm)	H3 (mm)	H5 (mm)	L (mm)	L1 (mm)	L2 (mm)	L5 (mm)	L6 (mm)	L7 (mm)	L8 (mm)	z (mm)	closest inch (inch)
16	50	231	62	64	94	167	92	180	56	97	83	122	33	64	⅜
20	50	231	62	64	94	167	95	180	56	97	83	122	33	64	½
25	58	240	72	73	94	167	111	180	66	97	83	122	33	74	¾
32	68	240	77	73	94	167	123	180	71	97	83	122	33	79	1
40	84	251	87	84	94	167	146	180	85	97	83	122	33	95	1 ¼
50	97	251	97	84	94	167	157	180	89	97	83	122	33	95	1 ½
63	124	273	112	106	94	167	183	180	101	97	83	122	33	107	2

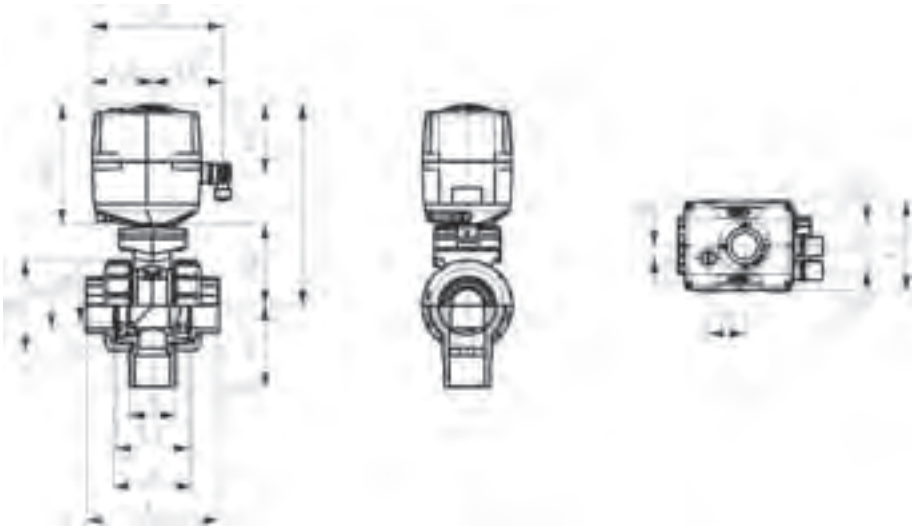



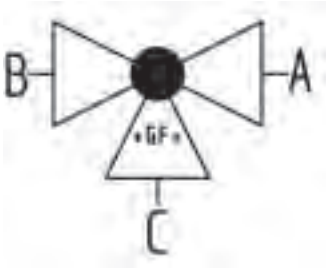

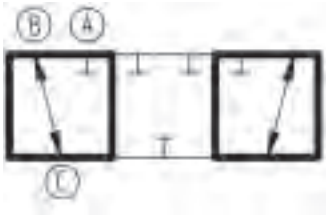

3-Way ball valve type 170 PVC-U
Vertical/L-port 24V
With manual emergency override
With solvent cement sockets metric

Model:

- Voltage 24 V AC/DC
- Factory set control range 90°<)
- Basic position B-C opened, activated position A-C opened, see flow scheme
- Other positions possible by adjusting the limit switches
- Heating element, position feedback (Open/Close/ Middle)
- Integrated stainless steel mounting inserts

Option:

- Optional accessories: Fail-safe return unit, Monitoring board, Position controller, Profibus DP board

d (mm)	DN (mm)	PN (bar)	kv-value (Δp=1 bar) (l/min)	EA	EPDM Code	Weight (kg)	FPM Code	Weight (kg)
16	10	10	49	EA25	**199 170 262**	2.039	**199 170 272**	2.039
20	15	10	77	EA25	**199 170 263**	2.043	**199 170 273**	2.043
25	20	10	146	EA25	**199 170 264**	2.546	**199 170 274**	2.150
32	25	10	260	EA25	**199 170 265**	2.267	**199 170 275**	2.267
40	32	10	437	EA25	**199 170 266**	2.922	**199 170 276**	2.554
50	40	10	667	EA25	**199 170 267**	2.818	**199 170 277**	2.818
63	50	10	1293	EA25	**199 170 268**	3.595	**199 170 278**	3.595

d (mm)	D (mm)	H (mm)	H1 (mm)	H2 (mm)	H3 (mm)	H5 (mm)	L (mm)	L1 (mm)	L2 (mm)	L5 (mm)	L6 (mm)	L7 (mm)	L8 (mm)	z (mm)	closest inch (inch)
16	50	231	62	64	94	167	92	180	56	97	83	122	33	64	⅜
20	50	231	62	64	94	167	95	180	56	97	83	122	33	64	½
25	58	240	72	73	94	167	111	180	66	97	83	122	33	74	¾
32	68	240	77	73	94	167	123	180	71	97	83	122	33	79	1
40	84	251	87	84	94	167	146	180	85	97	83	122	33	95	1 ¼
50	97	251	97	84	94	167	157	180	89	97	83	122	33	95	1 ½
63	124	273	112	106	94	167	183	180	101	97	83	122	33	107	2

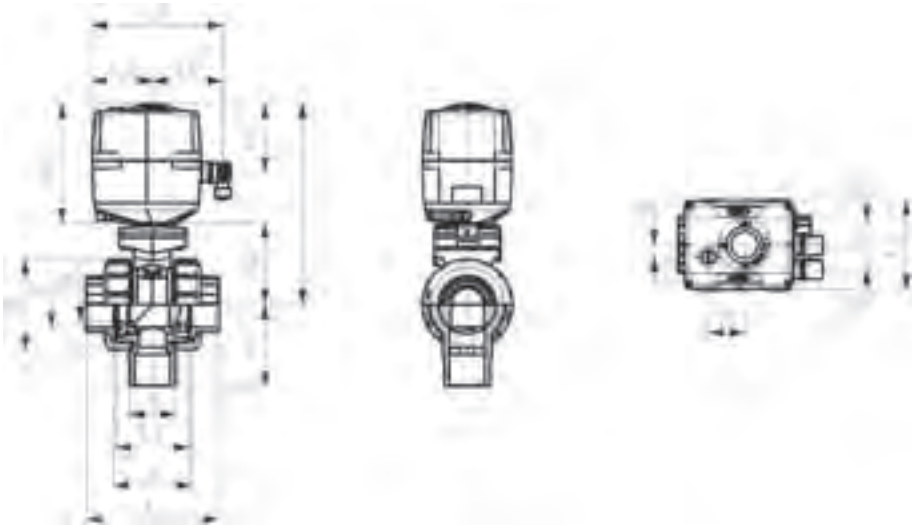

3-Way ball valves electric type 189



3-Way ball valve type 189 PVC-U
Vertical diverter ball 100-230
With solvent cement sockets metric

Model:

- Ball seals PTFE
- Voltage 100-230 V, 50-60 Hz for EA31
- Control time 15 s/90°<) EA31
- Special valve in general accordance to ISO 16135

Mode of action:

- For interconnection of two inputs

Individual configuration available on special request

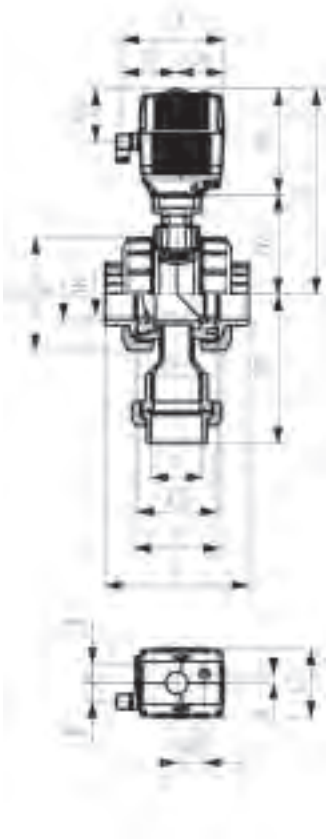

d (mm)	DN (mm)	PN (bar)	EPDM Code	Weight (kg)	FPM Code
75	65	6	**199 189 008**	9.230	**199 189 018**
90	80	6	**199 189 009**	12.171	**199 189 019**
110	100	6	**199 189 010**	15.985	**199 189 020**

d (mm)	D (mm)	H (mm)	H1 (mm)	H2 (mm)	H3 (mm)	H5 (mm)	L (mm)	L1 (mm)	L2 (mm)	L3 (mm)	L5 (mm)	L6 (mm)	L7 (mm)	L8 (mm)	z (mm)
75	166	346	226	156	94	190	233	180	136	64	98	82	122	33	144
90	200	358	264	168	94	190	254	180	141	64	98	82	122	33	151
110	238	365	289	175	94	190	301	180	164	64	98	82	122	33	174

d (mm)	closest inch (inch)
75	2 ½
90	3
110	4



3-Way ball valve type 189 PVC-U
Vertical diverter ball 24V
With solvent cement sockets metric

Model:

- Ball seals PTFE
- Voltage 24 V AC/DC
- Control time 15 s/90°<) EA31
- Special valve in general accordance to ISO 16135

Mode of action:

- For interconnection of two inputs

Individual configuration available on special request

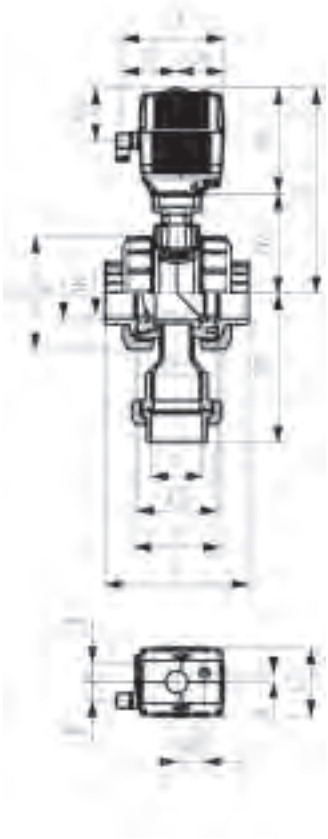

d (mm)	DN (mm)	PN (bar)	EPDM Code	Weight (kg)	FPM Code
75	95	6	**199 189 068**	9.230	**199 189 078**
90	80	6	**199 189 069**	12.171	**199 189 079**
110	100	6	**199 189 070**	15.985	**199 189 080**

d (mm)	D (mm)	H (mm)	H1 (mm)	H2 (mm)	H3 (mm)	H5 (mm)	L (mm)	L1 (mm)	L2 (mm)	L3 (mm)	L5 (mm)	L6 (mm)	L7 (mm)	L8 (mm)	z (mm)
75	166	346	226	156	94	190	233	180	136	64	98	82	122	33	144
90	200	358	264	168	94	190	254	180	141	64	98	82	122	33	151
110	238	365	289	175	94	190	301	180	164	64	98	82	122	33	174

d (mm)	closest inch (inch)
75	2 ½
90	3
110	4

3-Way ball valves pneumatic type 285



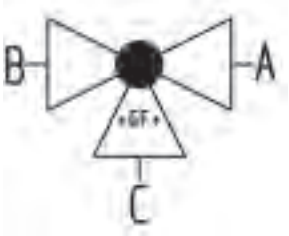

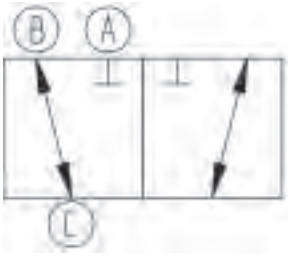

3-Way ball valve type 285 PVC-U
Horizontal/L-port FC (Fail safe to close)
Without manual override
With solvent cement sockets metric

Model:

- Built on with pneumatic actuator PA11 (DN10/15-25), PA21 (DN32-50)
- Basic position B-C opened, activated position A-C opened, see flow scheme
- Control time 90°<) 1-3 s
- For easy installation and removal
- Integrated stainless steel mounting inserts

d (mm)	DN (mm)	PN (bar)	kv-value (Δp=1 bar) (l/min)	EPDM Code	Weight (kg)	FPM Code	Weight (kg)
16	10	10	50	**199 285 022**	1.115	**199 285 032**	1.115
20	15	10	75	**199 285 023**	1.121	**199 285 033**	1.121
25	20	10	150	**199 285 024**	1.227	**199 285 034**	1.228
32	25	10	280	**199 285 025**	1.439	**199 285 035**	1.413
40	32	10	480	**199 285 026**	2.539	**199 285 036**	2.539
50	40	10	620	**199 285 027**	3.592	**199 285 037**	2.991
63	50	10	1230	**199 285 028**	4.298	**199 285 038**	4.352

d (mm)	D (mm)	H (mm)	H1 (mm)	H2 (mm)	H3 (mm)	H4 (mm)	H5 (mm)	H6 (mm)	L (mm)	L1 (mm)	L2 (mm)	L3 (mm)	L4 (mm)	L5 (mm)	L6 (mm)
16	50	159	28	62	97	40	77	8	109	194	73	36	25	261	76
20	50	159	28	62	97	40	77	8	112	194	73	36	25	261	76
25	58	168	32	71	97	40	77	8	131	194	86	43	25	261	76
32	68	168	36	71	97	40	77	8	151	194	99	50	25	261	76
40	84	203	45	84	119	51	99	9	181	224	120	60	45	305	95
50	97	203	51	84	119	51	99	9	205	224	137	69	45	305	95
63	124	225	65	106	119	51	99	9	261	224	179	89	45	305	95

d (mm)	L7 (mm)	M	z (mm)	z1 (mm)	closest inch (inch)
16	48	6	81	40	⅜
20	48	6	81	40	½
25	48	6	94	47	¾
32	48	6	107	54	1
40	59	8	130	65	1 ¼
50	59	8	143	72	1 ½
63	59	8	185	92	2

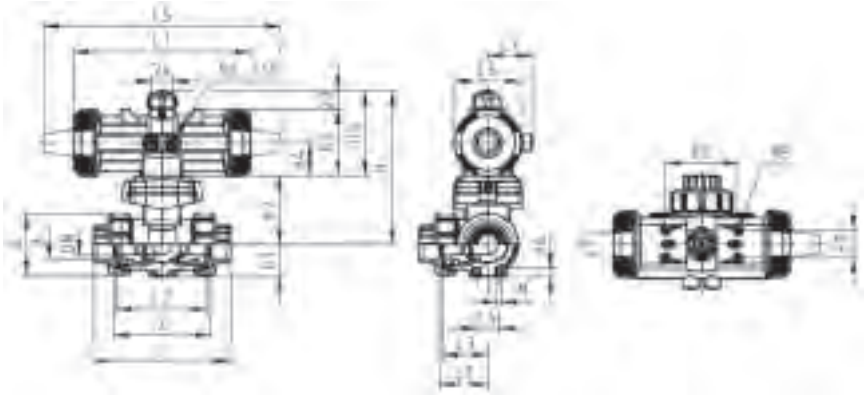



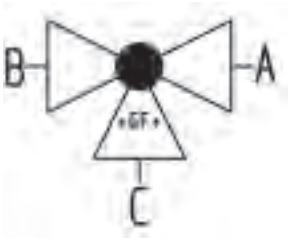

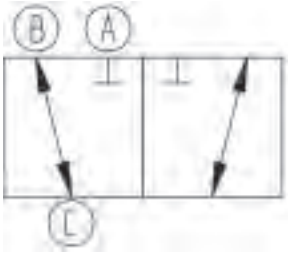

3-Way ball valve type 285 PVC-U
Horizontal/L-port FC (Fail safe to close)
Without manual override
With solvent cement spigots metric

Model:

- Built on with pneumatic actuator PA11 (DN10/15-25), PA21 (DN32-50)
- Basic position B-C opened, activated position A-C opened, see flow scheme
- Control time 90°<) 1-3 s
- For easy installation and removal
- Integrated stainless steel mounting inserts

d (mm)	DN (mm)	PN (bar)	kv-value (Δp=1 bar) (l/min)	EPDM Code	Weight (kg)	FPM Code	Weight (kg)
16	10	10	50	**199 285 002**	1.121	**199 285 012**	1.121
20	15	10	75	**199 285 003**	1.130	**199 285 013**	1.130
25	20	10	150	**199 285 004**	1.241	**199 285 014**	1.264
32	25	10	280	**199 285 005**	1.463	**199 285 015**	1.436
40	32	10	480	**199 285 006**	2.560	**199 285 016**	2.560
50	40	10	620	**199 285 007**	3.054	**199 285 017**	3.054
63	50	10	1230	**199 285 008**	4.478	**199 285 018**	4.451

d (mm)	D (mm)	H (mm)	H1 (mm)	H2 (mm)	H3 (mm)	H4 (mm)	H5 (mm)	H6 (mm)	L (mm)	L1 (mm)	L2 (mm)	L3 (mm)	L4 (mm)	L5 (mm)	L6 (mm)
16	50	159	28	62	97	40	77	8	131	194	73	36	25	261	76
20	50	159	28	62	97	40	77	8	141	194	73	36	25	261	76
25	58	168	32	71	97	40	77	8	165	194	86	43	25	261	76
32	68	168	36	71	97	40	77	8	182	194	99	50	25	261	76
40	84	203	45	84	119	51	99	9	209	224	120	60	45	305	95
50	97	203	51	84	119	51	99	9	242	224	137	69	45	305	95
63	124	225	65	106	119	51	99	9	302	224	179	89	45	305	95

d (mm)	L7 (mm)	M	closest inch (inch)
16	48	6	⅜
20	48	6	½
25	48	6	¾
32	48	6	1
40	59	8	1 ¼
50	59	8	1 ½
63	59	8	2

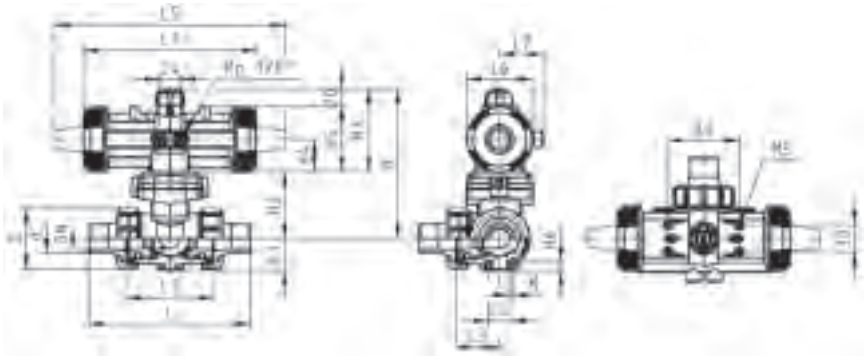



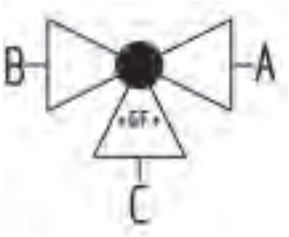

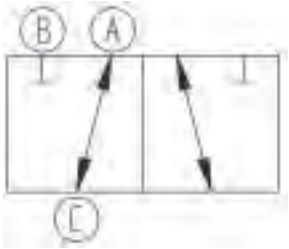

3-Way ball valve type 285 PVC-U
Horizontal/L-port DA (Double acting)
Without manual override
With solvent cement sockets metric

Model:

- Built on with pneumatic actuator PA11 (DN10/15-25), PA21 (DN32-50)
- Basic position A-C opened, activated position B-C opened, see flow scheme
- Control time 90°<) 1-3 s
- For easy installation and removal
- Integrated stainless steel mounting inserts

d (mm)	DN (mm)	PN (bar)	kv-value (Δp=1 bar) (l/min)	EPDM Code	Weight (kg)	FPM Code	Weight (kg)
16	10	10	50	**199 285 202**	0.925	**199 285 212**	0.925
20	15	10	75	**199 285 203**	0.931	**199 285 213**	0.885
25	20	10	150	**199 285 204**	1.059	**199 285 214**	1.059
32	25	10	280	**199 285 205**	1.183	**199 285 215**	1.249
40	32	10	480	**199 285 206**	2.115	**199 285 216**	2.115
50	40	10	620	**199 285 207**	2.452	**199 285 217**	2.463
63	50	10	1230	**199 285 208**	3.806	**199 285 218**	3.828

d (mm)	D (mm)	H (mm)	H1 (mm)	H2 (mm)	H3 (mm)	H4 (mm)	H5 (mm)	H6 (mm)	L (mm)	L1 (mm)	L2 (mm)	L3 (mm)	L4 (mm)	L5 (mm)	L6 (mm)
16	50	159	28	62	97	40	77	8	109	194	73	36	25	261	76
20	50	159	28	62	97	40	77	8	112	194	73	36	25	261	76
25	58	168	32	71	97	40	77	8	131	194	86	43	25	261	76
32	68	168	36	71	97	40	77	8	151	194	99	50	25	261	76
40	84	203	45	84	119	51	99	9	181	224	120	60	45	305	95
50	97	203	51	84	119	51	99	9	205	224	137	69	45	305	95
63	124	225	65	106	119	51	99	9	261	224	179	89	45	305	95

d (mm)	L7 (mm)	M	z (mm)	z1 (mm)	closest inch (inch)
16	48	6	81	40	⅜
20	48	6	81	40	½
25	48	6	94	47	¾
32	48	6	107	54	1
40	59	8	130	65	1 ¼
50	59	8	143	72	1 ½
63	59	8	185	92	2

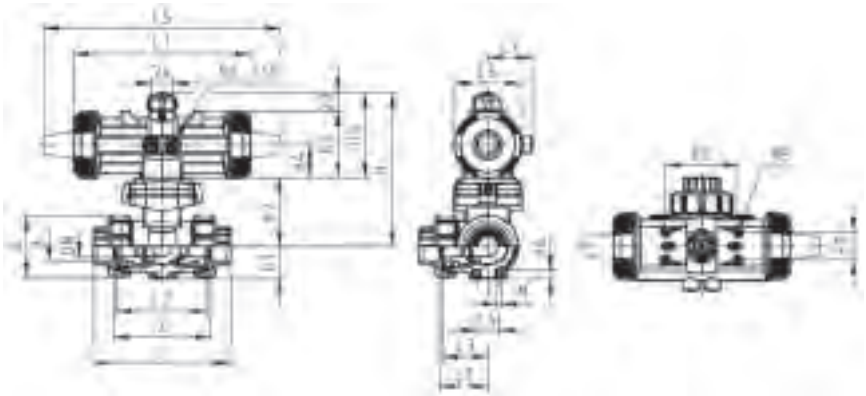



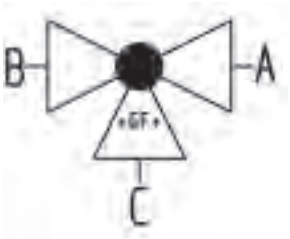

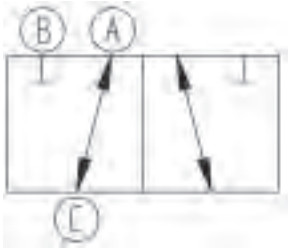

3-Way ball valve type 285 PVC-U
Horizontal/L-port DA (Double acting)
Without manual override
With solvent cement spigots metric

Model:

- Built on with pneumatic actuator PA11 (DN10/15-25), PA21 (DN32-50)
- Basic position A-C opened, activated position B-C opened, see flow scheme
- Control time 90°<) 1-3 s
- For easy installation and removal
- Integrated stainless steel mounting inserts

d (mm)	DN (mm)	PN (bar)	kv-value (Δp=1 bar) (l/min)	EPDM Code	Weight (kg)	FPM Code	Weight (kg)
16	10	10	50	**199 285 182**	0.931	**199 285 192**	0.931
20	15	10	75	**199 285 183**	0.940	**199 285 193**	0.940
25	20	10	150	**199 285 184**	1.074	**199 285 194**	1.074
32	25	10	280	**199 285 185**	1.273	**199 285 195**	1.273
40	32	10	480	**199 285 186**	2.136	**199 285 196**	2.136
50	40	10	620	**199 285 187**	2.630	**199 285 197**	2.630
63	50	10	1230	**199 285 188**	4.054	**199 285 198**	4.054

d (mm)	D (mm)	H (mm)	H1 (mm)	H2 (mm)	H3 (mm)	H4 (mm)	H5 (mm)	H6 (mm)	L (mm)	L1 (mm)	L2 (mm)	L3 (mm)	L4 (mm)	L5 (mm)	L6 (mm)
16	50	159	28	62	97	40	77	8	131	194	73	36	25	261	76
20	50	159	28	62	97	40	77	8	141	194	73	36	25	261	76
25	58	168	32	71	97	40	77	8	165	194	86	43	25	261	76
32	68	168	36	71	97	40	77	8	182	194	99	50	25	261	76
40	84	203	45	84	119	51	99	9	209	224	120	60	45	305	95
50	97	203	51	84	119	51	99	9	242	224	137	69	45	305	95
63	124	225	65	106	119	51	99	9	302	224	179	89	45	305	95

d (mm)	L7 (mm)	M	closest inch (inch)
16	48	6	⅜
20	48	6	½
25	48	6	¾
32	48	6	1
40	59	8	1 ¼
50	59	8	1 ½
63	59	8	2

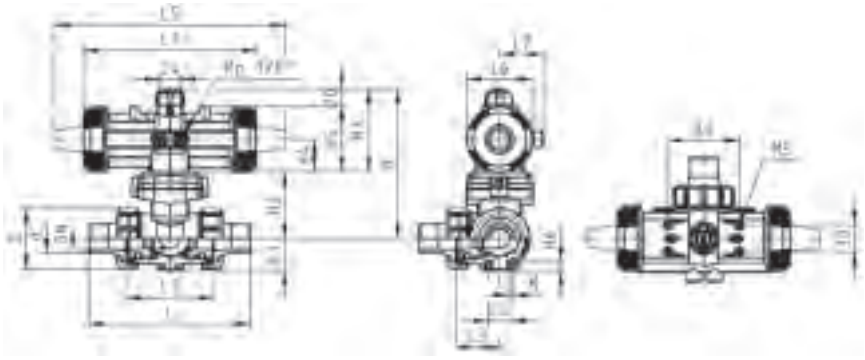



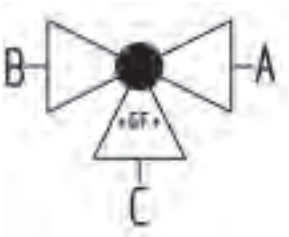

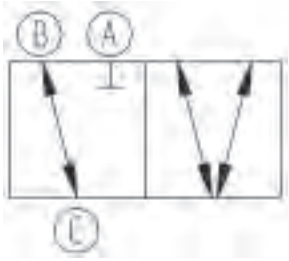

3-Way ball valve type 285 PVC-U
Horizontal/T-port FC (Fail safe to close)
Without manual override
With solvent cement sockets metric

Model:

- Built on with pneumatic actuator PA11 (DN10/15-25), PA21 (DN32-50)
- Basic position B-C opened, activated position A-B-C opened, see flow scheme
- Control time 90°<) 1-3 s
- For easy installation and removal
- Integrated stainless steel mounting inserts

d (mm)	DN (mm)	PN (bar)	kv-value (Δp=1 bar) (l/min)	EPDM Code	Weight (kg)	FPM Code	Weight (kg)
16	10	10	140	**199 285 062**	1.114	**199 285 072**	1.114
20	15	10	200	**199 285 063**	1.120	**199 285 073**	1.120
25	20	10	470	**199 285 064**	1.247	**199 285 074**	1.247
32	25	10	793	**199 285 065**	1.404	**199 285 075**	1.432
40	32	10	1290	**199 285 066**	2.481	**199 285 076**	2.528
50	40	10	1910	**199 285 067**	2.970	**199 285 077**	2.970
63	50	10	3100	**199 285 068**	4.263	**199 285 078**	4.314

d (mm)	D (mm)	H (mm)	H1 (mm)	H2 (mm)	H3 (mm)	H4 (mm)	H5 (mm)	H6 (mm)	L (mm)	L1 (mm)	L2 (mm)	L3 (mm)	L4 (mm)	L5 (mm)	L6 (mm)
16	50	159	28	62	97	40	77	8	109	194	73	36	25	261	76
20	50	159	28	62	97	40	77	8	112	194	73	36	25	261	76
25	58	168	32	71	97	40	77	8	131	194	86	43	25	261	76
32	68	168	36	71	97	40	77	8	151	194	99	50	25	261	76
40	84	203	45	84	119	51	99	9	181	224	120	60	45	305	95
50	97	203	51	84	119	51	99	9	205	224	137	69	45	305	95
63	124	225	65	106	119	51	99	9	261	224	179	89	45	305	95

d (mm)	L7 (mm)	M	z (mm)	z1 (mm)	closest inch (inch)
16	48	6	81	40	⅜
20	48	6	81	40	½
25	48	6	94	47	¾
32	48	6	107	54	1
40	59	8	130	65	1 ¼
50	59	8	143	72	1 ½
63	59	8	185	92	2

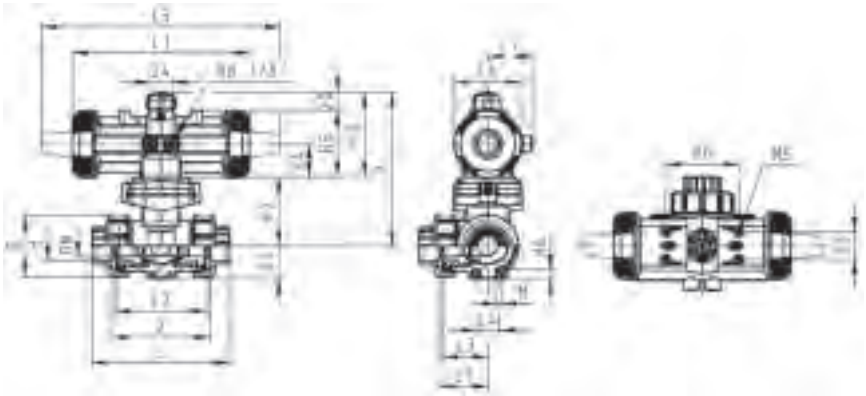



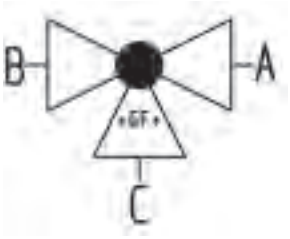

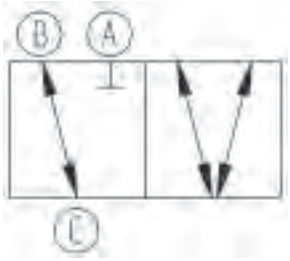

3-Way ball valve type 285 PVC-U
Horizontal/T-port FC (Fail safe to close)
Without manual override
With solvent cement spigots metric

Model:

- Built on with pneumatic actuator PA11 (DN10/15-25), PA21 (DN32-50)
- Basic position B-C opened, activated position A-B-C opened, see flow scheme
- Control time 90°<) 1-3 s
- For easy installation and removal
- Integrated stainless steel mounting inserts

d (mm)	DN (mm)	PN (bar)	kv-value (Δp=1 bar) (l/min)	EPDM Code	Weight (kg)	FPM Code	Weight (kg)
16	10	10	140	**199 285 042**	1.120	**199 285 052**	1.120
20	15	10	200	**199 285 043**	1.129	**199 285 053**	1.129
25	20	10	470	**199 285 044**	1.262	**199 285 054**	1.262
32	25	10	793	**199 285 045**	1.456	**199 285 055**	1.456
40	32	10	1290	**199 285 046**	2.549	**199 285 056**	2.549
50	40	10	1910	**199 285 047**	3.033	**199 285 057**	3.033
63	50	10	3100	**199 285 048**	4.433	**199 285 058**	4.433

d (mm)	D (mm)	H (mm)	H1 (mm)	H2 (mm)	H3 (mm)	H4 (mm)	H5 (mm)	H6 (mm)	L (mm)	L1 (mm)	L2 (mm)	L3 (mm)	L4 (mm)	L5 (mm)	L6 (mm)
16	50	159	28	62	97	40	77	8	131	194	73	36	25	261	76
20	50	159	28	62	97	40	77	8	141	194	73	36	25	261	76
25	58	168	32	71	97	40	77	8	165	194	86	43	25	261	76
32	68	168	36	71	97	40	77	8	182	194	99	50	25	261	76
40	84	203	45	84	119	51	99	9	209	224	120	60	45	305	95
50	97	203	51	84	119	51	99	9	242	224	137	69	45	305	95
63	124	225	65	106	119	51	99	9	302	224	179	89	45	305	95

d (mm)	L7 (mm)	M	closest inch (inch)
16	48	6	⅜
20	48	6	½
25	48	6	¾
32	48	6	1
40	59	8	1 ¼
50	59	8	1 ½
63	59	8	2

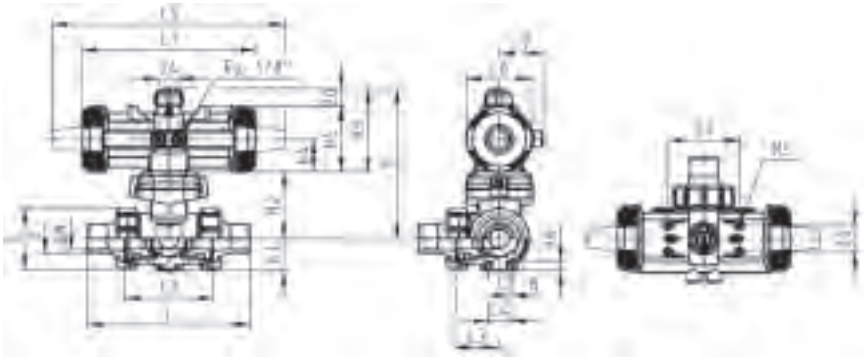



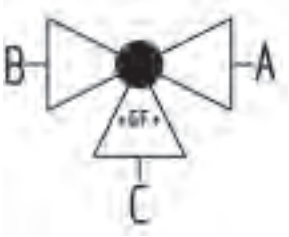

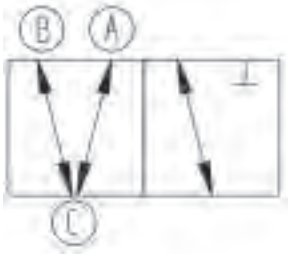

3-Way ball valve type 285 PVC-U
Horizontal/T-port DA (Double acting)
Without manual override
With solvent cement sockets metric

Model:

- Built on with pneumatic actuator PA11 (DN10/15-25), PA21 (DN32-50)
- Basic position A-B-C opened, activated position B-C opened, see flow scheme
- Control time 90°<) 1-3 s
- For easy installation and removal
- Integrated stainless steel mounting inserts

d (mm)	DN (mm)	PN (bar)	kv-value (Δp=1 bar) (l/min)	EPDM Code	Weight (kg)	FPM Code	Weight (kg)
16	10	10	140	**199 285 242**	0.924	**199 285 252**	0.924
20	15	10	200	**199 285 243**	0.930	**199 285 253**	0.930
25	20	10	470	**199 285 244**	1.057	**199 285 254**	1.057
32	25	10	793	**199 285 245**	1.242	**199 285 255**	1.242
40	32	10	1290	**199 285 246**	2.104	**199 285 256**	2.104
50	40	10	1910	**199 285 247**	2.546	**199 285 257**	2.546
63	50	10	3100	**199 285 248**	3.883	**199 285 258**	3.883

d (mm)	D (mm)	H (mm)	H1 (mm)	H2 (mm)	H3 (mm)	H4 (mm)	H5 (mm)	H6 (mm)	L (mm)	L1 (mm)	L2 (mm)	L3 (mm)	L4 (mm)	L5 (mm)	L6 (mm)
16	50	159	28	62	97	40	77	8	109	194	73	36	25	261	76
20	50	159	28	62	97	40	77	8	112	194	73	36	25	261	76
25	58	168	32	71	97	40	77	8	131	194	86	43	25	261	76
32	68	168	36	71	97	40	77	8	151	194	99	50	25	261	76
40	84	203	45	84	119	51	99	9	181	224	120	60	45	305	95
50	97	203	51	84	119	51	99	9	205	224	137	69	45	305	95
63	124	225	65	106	119	51	99	9	261	224	179	89	45	305	95

d (mm)	L7 (mm)	M	z (mm)	z1 (mm)	closest inch (inch)
16	48	6	81	40	⅜
20	48	6	81	40	½
25	48	6	94	47	¾
32	48	6	107	54	1
40	59	8	130	65	1 ¼
50	59	8	143	72	1 ½
63	59	8	185	92	2

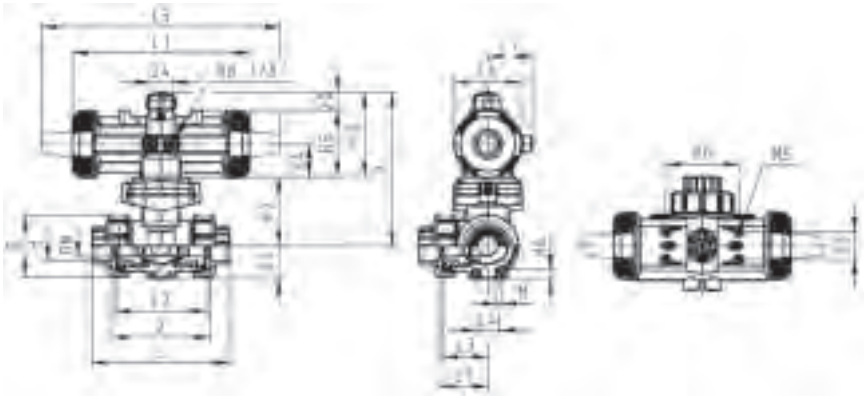



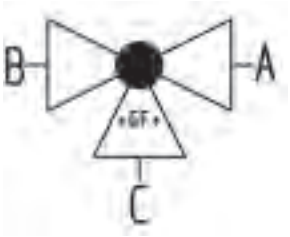

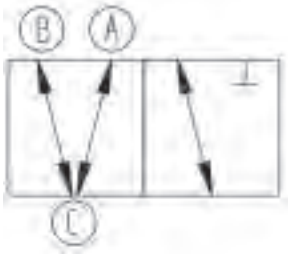

3-Way ball valve type 285 PVC-U
Horizontal/T-port DA (Double acting)
Without manual override
With solvent cement spigots metric

Model:

- Built on with pneumatic actuator PA11 (DN10/15-25), PA21 (DN32-50)
- Basic position A-B-C opened, activated position B-C opened, see flow scheme
- Control time 90°<) 1-3 s
- For easy installation and removal
- Integrated stainless steel mounting inserts

d (mm)	DN (mm)	PN (bar)	kv-value (Δp=1 bar) (l/min)	EPDM Code	Weight (kg)	FPM Code	Weight (kg)
16	10	10	140	**199 285 222**	0.930	**199 285 232**	0.930
20	15	10	200	**199 285 223**	0.939	**199 285 233**	0.939
25	20	10	470	**199 285 224**	1.072	**199 285 234**	1.072
32	25	10	793	**199 285 225**	1.266	**199 285 235**	1.266
40	32	10	1290	**199 285 226**	2.125	**199 285 236**	2.125
50	40	10	1910	**199 285 227**	2.609	**199 285 237**	2.609
63	50	10	3100	**199 285 228**	4.009	**199 285 238**	4.009

d (mm)	D (mm)	H (mm)	H1 (mm)	H2 (mm)	H3 (mm)	H4 (mm)	H5 (mm)	H6 (mm)	L (mm)	L1 (mm)	L2 (mm)	L3 (mm)	L4 (mm)	L5 (mm)	L6 (mm)
16	50	159	28	62	97	40	77	8	131	194	73	36	25	261	76
20	50	159	28	62	97	40	77	8	141	194	73	36	25	261	76
25	58	168	32	71	97	40	77	8	165	194	86	43	25	261	76
32	68	168	36	71	97	40	77	8	182	194	99	50	25	261	76
40	84	203	45	84	119	51	99	9	209	224	120	60	45	305	95
50	97	203	51	84	119	51	99	9	242	224	137	69	45	305	95
63	124	225	65	106	119	51	99	9	302	224	179	89	45	305	95

d (mm)	L7 (mm)	M	closest inch (inch)
16	48	6	⅜
20	48	6	½
25	48	6	¾
32	48	6	1
40	59	8	1 ¼
50	59	8	1 ½
63	59	8	2

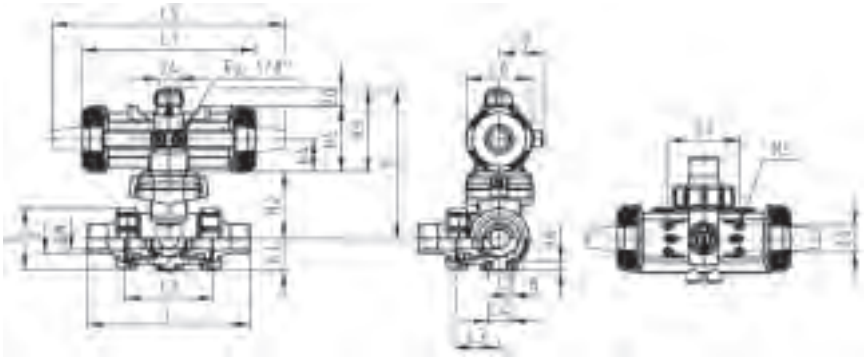

Metering ball valves type 523



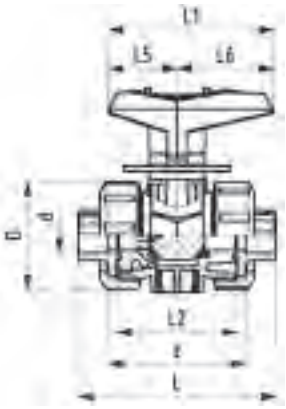

Metering ball valve type 523 PVC-U
With mounting inserts
With solvent cement sockets metric

Model:

- Micro-doser
- Excellent control characteristics
- Designed for easy installation and removal
- Ball seals PTFE
- Angle of operation 180° with scale
- Integrated stainless steel mounting inserts
- Z-length, end connectors and union nuts **not compatible** to Type 323

Option:

- Other materials on demand

d (mm)	DN (mm)	PN (bar)	kv-value (Δp=1 bar) (l/min)	EPDM Code	Weight (kg)	FPM Code	Weight (kg)
16	10	10	11	**161 523 401**	0.170	**161 523 411**	0.170
20	15	10	20	**161 523 402**	0.169	**161 523 412**	0.170

d (mm)	D (mm)	H (mm)	H1 (mm)	L (mm)	L1 (mm)	L2 (mm)	L4 (mm)	L5 (mm)	L6 (mm)	z (mm)	closest inch (inch)
16	50	68	27	92	77	56	25	32	45	64	⅜
20	50	68	27	95	77	56	25	32	45	64	½





Metering ball valve type 523 PVC-U
With mounting inserts
With solvent cement spigots metric

Model:

- Micro-doser
- Excellent control characteristics
- Designed for easy installation and removal
- Ball seals PTFE
- Angle of operation 180° with scale
- Integrated stainless steel mounting inserts
- Z-length, end connectors and union nuts **not compatible** to Type 323

Option:

- Other materials on demand

d (mm)	DN (mm)	PN (bar)	kv-value (Δp=1 bar) (l/min)	EPDM Code	Weight (kg)	FPM Code	Weight (kg)
16	10	10	11	**161 523 441**	0.170	**161 523 451**	0.170
20	15	10	20	**161 523 442**	0.170	**161 523 452**	0.170

d (mm)	D (mm)	H (mm)	H1 (mm)	L (mm)	L1 (mm)	L2 (mm)	L3 (mm)	L4 (mm)	L5 (mm)	L6 (mm)	closest inch (inch)
16	50	68	27	114	77	56		25	32	45	⅜
20	50	68	27	124	77	56	130	25	32	45	½



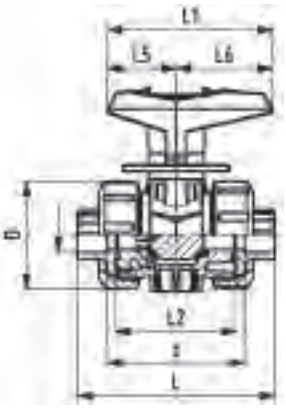

Metering ball valve type 523 PVC-U
With mounting inserts
With threaded sockets Rp

Model:

- Micro-doser
- Excellent control characteristics
- Designed for easy installation and removal
- Ball seals PTFE
- Angle of operation 180° with scale
- Integrated stainless steel mounting inserts
- Z-length, end connectors and union nuts **not compatible** to Type 323

Option:

- Other materials on demand

Rp (inch)	DN (mm)	PN (bar)	kv-value (Δp=1 bar) (l/min)	EPDM Code	Weight (kg)	FPM Code	Weight (kg)
⅜	10	10	11	**161 523 421**	0.170	**161 523 431**	0.170
½	15	10	20	**161 523 422**	0.170	**161 523 432**	0.170

Rp (inch)	D (mm)	H (mm)	H1 (mm)	L (mm)	L1 (mm)	L2 (mm)	L4 (mm)	L5 (mm)	L6 (mm)	z (mm)
⅜	50	68	27	95	77	56	25	32	45	69
½	50	68	27	100	77	56	25	32	45	67

Laboratory ball valves type 322



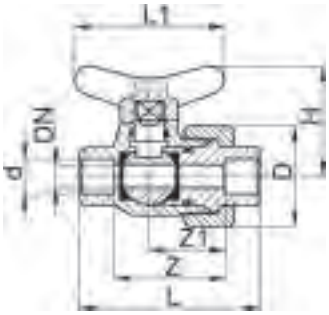

Laboratory ball cock type 322 PVC-U
With solvent cement sockets metric

Model:

- Disconnection one end only
- Ball seals PTFE

d (mm)	DN (mm)	PN (bar)	EPDM Code	Weight (kg)	FPM Code	Weight (kg)	D (mm)	H (mm)	L (mm)	L1 (mm)	z (mm)	z1 (mm)
10	6	10	**161 322 150**	0.043	**161 322 199**	0.043	34	38	52	45	26	15
12	8	10	**161 322 200**	0.043	**161 322 249**	0.050	34	38	60	45	36	25

Diaphragm valves





Diaphragm valve type 514 PVC-U
With solvent cement sockets metric

Model:

- Double flow rate compared to predecessor
- One housing nut replaces four screws
- Handwheel with built-in locking mechanism
- For easy installation and removal
- Short overall length

Option:

- Individual configuration of the valve (see diagram)
- Self adjusting multifunctional module with integrated limit switches
- PN16 available as a configuration

d (mm)	DN (mm)	PN (bar)	kv-value (Δp=1 bar) (l/min)	NBR Code	Weight (kg)	EPDM Code	Weight (kg)	PTFE/EPDM Code	Weight (kg)
16	10	10	125	**161 514 001**	0.305	**161 514 011**	0.303	**161 514 031**	0.306
20	15	10	125	**161 514 002**	0.398	**161 514 012**	0.295	**161 514 032**	0.298
25	20	10	271	**161 514 003**	0.428	**161 514 013**	0.423	**161 514 033**	0.428
32	25	10	481	**161 514 004**	1.161	**161 514 014**	0.673	**161 514 034**	1.181
40	32	10	759	**161 514 005**	0.958	**161 514 015**	0.965	**161 514 035**	0.977
50	40	10	1263	**161 514 006**	1.625	**161 514 016**	1.624	**161 514 036**	1.658
63	50	10	1728	**161 514 007**	2.501	**161 514 017**	2.488	**161 514 037**	2.547

d (mm)	FPM Code	Weight (kg)	PTFE/FPM Code	Weight (kg)
16	**161 514 061**	0.310	**800 047 300**	0.420
20	**161 514 062**	0.302	**800 047 301**	0.420
25	**161 514 063**	0.691	**800 047 303**	0.560
32	**161 514 064**	0.691	**800 047 304**	1.210
40	**161 514 065**	0.982	**800 047 306**	1.540
50	**161 514 066**	2.516	**800 047 308**	2.680
63	**161 514 067**	2.546	**800 047 309**	2.581

d (mm)	D (mm)	D2 (mm)	D3 (mm)	H (mm)	H1 (mm)	H2 (mm)	L (mm)	L2 (mm)	M	z (mm)	Lift = Hx (mm)	closest inch (inch)
16	65	65	43	73	14	12	170	25	M6	142	7	⅜
20	65	65	43	73	14	12	128	25	M6	96	7	½
25	80	65	51	81	18	12	152	25	M6	114	10	¾
32	88	87	58	107	22	12	166	25	M6	122	13	1
40	101	87	72	115	26	15	192	45	M8	140	15	1 ¼
50	117	135	83	148	32	15	222	45	M8	160	19	1 ½
63	144	135	100	166	39	15	266	45	M8	190	25	2





Diaphragm valve type 514 PVC-U
With solvent cement sockets metric PN16

Model:

- Double flow rate compared to predecessor
- One housing nut replaces four screws
- Handwheel with built-in locking mechanism
- Not recommended for oxidizing acids
- For easy installation and removal
- Short overall length

Option:

- Individual configuration of the valve (see diagram)
- Self adjusting multifunctional module with integrated limit switches

d (mm)	DN (mm)	PN (bar)	kv-value (Δp=1 bar) (l/min)	EPDM Code	Weight (kg)	PTFE/EPDM Code	Weight (kg)
20	15	16	125	**800 047 166**	0.420	**800 047 160**	0.420
25	20	16	271	**800 047 167**	0.560	**800 047 161**	0.560
32	25	16	481	**800 047 168**	1.210	**800 047 162**	1.210
40	32	16	759	**800 047 169**	1.005	**800 047 163**	1.540
50	40	16	1263	**800 047 170**	1.706	**800 047 164**	2.680
63	50	16	1728	**800 047 171**	3.630	**800 047 165**	3.630

d (mm)	D (mm)	D2 (mm)	D3 (mm)	H (mm)	H1 (mm)	H2 (mm)	L (mm)	L2 (mm)	M	z (mm)	Lift = Hx (mm)	closest inch (inch)
20	65	65	43	73	14	12	128	25	M6	96	7	½
25	80	65	51	81	18	12	152	25	M6	114	10	¾
32	88	87	58	107	22	12	166	25	M6	122	13	1
40	101	87	72	115	26	15	192	45	M8	140	15	1 ¼
50	117	135	83	148	32	15	222	45	M8	160	19	1 ½
63	144	135	100	166	39	15	266	45	M8	190	25	2





Diaphragm valve type 514 PVC-U
With threaded sockets Rp

Model:

- Double flow rate compared to predecessor
- One housing nut replaces four screws
- Handwheel with built-in locking mechanism
- For easy installation and removal
- Short overall length

Option:

- Individual configuration of the valve (see diagram)
- Self adjusting multifunctional module with integrated limit switches
- PN16 available as a configuration

Rp (inch)	DN (mm)	PN (bar)	kv-value (Δp=1 bar) (l/min)	NBR Code	Weight (kg)	EPDM Code	Weight (kg)	PTFE/EPDM Code	Weight (kg)
½	15	10	125	**161 514 402**	0.400	**161 514 412**	0.298	**161 514 432**	0.410
¾	20	10	271	**161 514 403**	0.523	**161 514 413**	0.426	**161 514 433**	0.534
1	25	10	481	**161 514 404**	0.678	**161 514 414**	0.679	**161 514 434**	0.693
1 ¼	32	10	759	**161 514 405**	1.429	**161 514 415**	0.957	**161 514 435**	1.449
1 ½	40	10	1263	**161 514 406**	2.528	**161 514 416**	1.654	**161 514 436**	2.558
2	50	10	1728	**161 514 407**	3.449	**161 514 417**	3.449	**161 514 437**	3.477

table continued on the next page

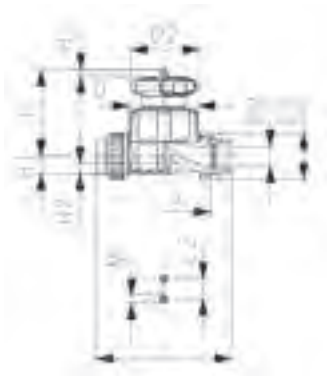

Rp (inch)	FPM Code	Weight (kg)	D (mm)	D2 (mm)	D3 (mm)	H (mm)	H1 (mm)	H2 (mm)	L (mm)	L2 (mm)	M	z (mm)	Lift = Hx (mm)
½	**161 514 462**	0.400	65	65	43	73	14	12	128	25	M6	96	7
¾	**161 514 463**	0.523	80	65	51	81	18	12	152	25	M6	114	10
1	**161 514 464**	1.163	88	87	58	107	22	12	166	25	M6	122	13
1 ¼	**161 514 465**	1.429	101	87	72	115	26	15	192	45	M8	140	15
1 ½	**161 514 466**	2.528	117	135	83	148	32	15	222	45	M8	160	19
2	**161 514 467**	3.449	144	135	100	166	39	15	266	45	M8	190	25



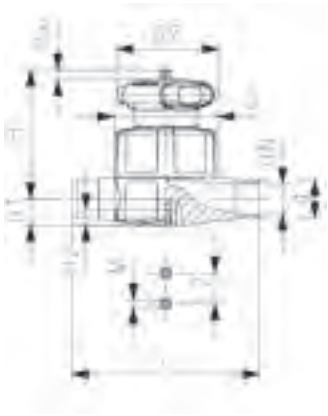

Diaphragm valve type 515 PVC-U
With solvent cement spigots metric

Model:

- Double flow rate compared to predecessor
- One housing nut replaces four screws
- Handwheel with built-in locking mechanism
- Overall length EN 558

Option:

- Individual configuration of the valve (see diagram)
- Self adjusting multifunctional module with integrated limit switches
- PN16 available as a configuration

d (mm)	DN (mm)	PN (bar)	kv-value (Δp=1 bar) (l/min)	NBR Code	Weight (kg)	EPDM Code	Weight (kg)	PTFE/EPDM Code	Weight (kg)
20	15	10	125	**161 515 002**	0.335	**161 515 012**	0.240	**161 515 032**	0.238
25	20	10	271	**161 515 003**	0.445	**161 515 013**	0.445	**161 515 033**	0.456
32	25	10	481	**161 515 004**	0.565	**161 515 014**	0.568	**161 515 034**	0.575
40	32	10	759	**161 515 005**	1.237	**161 515 015**	1.237	**161 515 035**	1.257
50	40	10	1263	**161 515 006**	1.363	**161 515 016**	1.364	**161 515 036**	2.292
63	50	10	1728	**161 515 007**	2.963	**161 515 017**	2.248	**161 515 037**	2.097

d (mm)	FPM Code	Weight (kg)	D (mm)	D2 (mm)	H (mm)	H1 (mm)	H2 (mm)	L (mm)	L2 (mm)	M	Lift = Hx (mm)	closest inch (inch)
20	**161 515 062**	0.243	65	65	73	14	12	124	25	M6	7	½
25	**161 515 063**	0.445	80	65	81	18	12	144	25	M6	10	¾
32	**161 515 064**	1.032	88	87	107	22	12	154	25	M6	13	1
40	**161 515 065**	0.785	101	87	115	26	15	174	45	M8	15	1 ¼
50	**161 515 066**	2.262	117	135	148	32	15	194	45	M8	19	1 ½
63	**161 515 067**	2.963	144	135	166	39	15	224	45	M8	25	2





Diaphragm valve type 517 PVC-U
With backing flanges PVC-U metric/BS

Model:

- Double flow rate compared to predecessor
- One housing nut replaces four screws
- Handwheel with built-in locking mechanism
- Flat sealing faces
- Overall length EN 558
- Connecting dimension: ISO 7005 PN 10, EN 1092 PN 10, DIN 2501 PN 10, BS 4504 PN 10

Option:

- Individual configuration of the valve (see diagram)
- Self adjusting multifunctional module with integrated limit switches

d (mm)	DN (mm)	PN (bar)	kv-value (Δp=1 bar) (l/min)	NBR Code	Weight (kg)	EPDM Code	Weight (kg)	PTFE/EPDM Code	Weight (kg)
20	15	10	125	**161 517 002**	0.493	**161 517 012**	0.395	**161 517 032**	0.503
25	20	10	271	**161 517 003**	0.661	**161 517 013**	0.558	**161 517 033**	0.672
32	25	10	481	**161 517 004**	1.344	**161 517 014**	0.887	**161 517 034**	1.364
40	32	10	759	**161 517 005**	1.352	**161 517 015**	1.230	**161 517 035**	1.247
50	40	10	1263	**161 517 006**	2.868	**161 517 016**	1.962	**161 517 036**	1.992
63	50	10	1728	**161 517 007**	3.789	**161 517 017**	2.893	**161 517 037**	2.939

d (mm)	FPM Code	Weight (kg)
20	**161 517 062**	0.493
25	**161 517 063**	0.661
32	**161 517 064**	0.895
40	**161 517 065**	1.352
50	**161 517 066**	2.868
63	**161 517 067**	2.943

d (mm)	D (mm)	D2 (mm)	D3 (mm)	D4 (mm)	D5 (mm)	H (mm)	H1 (mm)	H2 (mm)	L (mm)	L2 (mm)	M	Lift = Hx (mm)	closest inch (inch)
20	65	65	95	65	14	73	14	12	130	25	M6	7	½
25	80	65	105	75	14	81	18	12	150	25	M6	10	¾
32	88	87	115	85	14	107	22	12	160	25	M6	13	1
40	101	87	140	100	18	115	26	15	180	45	M8	15	1 ¼
50	117	135	150	110	18	148	32	15	200	45	M8	19	1 ½
63	144	135	165	125	18	166	39	15	230	45	M8	25	2





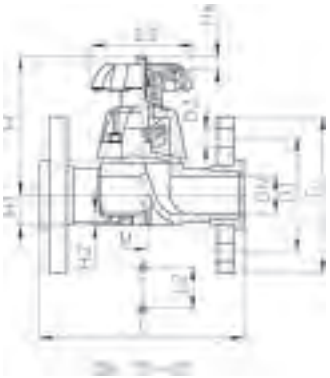

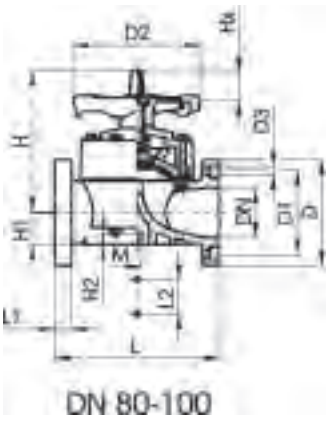

Diaphragm valve type 317 PVC-U
With flanges PVC-U metric

Model:

- Flat sealing faces
- Overall length according to EN 558
- Connecting dimension: ISO 7005 PN 10, EN 1092 PN 10, DIN 2501 PN 10, BS 4504 PN 10

Option:

- Handwheel lockable DN15-65 (basic version not lockable)

	d (mm)	Size (inch)	DN (mm)	PN (bar)	kv-value (Δp=1 bar) (l/min)
	75	2 ½	65	10	992
*	90	3	80	10	1700
	110	4	100	10	2700
*	160	6	150	7	6033

	d (mm)	NBR Code	EPDM Code	CSM Code	PTFE with EPDM supp. diaphragm Code	FPM Code	Weight (kg)
	75	**161 317 508**	**161 317 523**	**161 317 553**	**161 317 538**	**161 317 568**	5.090
*	90	**161 317 009**	**161 317 024**	**161 317 054**	**161 317 039**	**161 317 069**	9.700
	110	**161 317 010**	**161 317 025**	**161 317 055**	**161 317 040**	**161 317 070**	13.600
*	160	**161 317 012**	**161 317 027**	**161 317 057**	**161 317 042**	**161 317 072**	27.000

	d (mm)	D (mm)	D1 (mm)	D2 (mm)	D3 (mm)	H (mm)	H1 (mm)	H2 (mm)	L (mm)	L1 (mm)	L2 (mm)	L3 (mm)	M	Lift = Hx (mm)	AL
	75	185	145	152	18	201	46	15	290		70		M8	30	4
*	90	200	160	270	18	265	57	23	310	35	120		M12	40	8
	110	225	180	270	18	304	69	23	350	35	120		M12	50	8
*	160	285	240	400	23	437	108	23	480	26	100	200	M12	70	8

Product Configurator

Create your own diaphragm valve

Valve body type
A20 Type 514 - True Union Design
A21 Type 515 - Spigots
A22 Type 517 - Flanges

Material
B01 PVC-U
B02 PVC-C
B03 ABS

Dimension
C05 DN 10 3/8"
C06 DN 15 1/2"
C07 DN 20 3/4"
C08 DN 25 1"
C09 DN 32 1 1/4"
C10 DN 40 1 1/2"
C11 DN 50 2"

Version
D11 standard
D05 silicone free / oil free

Diaphragm
E01 EPDM
E02 FPM
E11 NBR
E12 PTFE/EPDM
E04 PTFE/FPM

Connecting parts

H01	PVC-U Cemented socket metric
H02	PVC-U Cemented socket JIS
H03	PVC-U Cemented socket ASTM
H04	PVC-U Cemented socket Zoll BS
H05	PVC-U Cemented spigot metric
H06	PVC-U Threaded socket Rp (ISO)
H08	PVC-U Threaded socket Rc (JIS)
H09	PVC-U Threaded socket NPT (ASTM)
H11	PVC-C Cemented socket metric
H13	PVC-C Cemented socket Zoll ASTM
H14	PVC-C Cemented spigot metric
H20	ABS Cemented socket metric
H21	ABS Cemented socket Zoll BS
H24	ABS Cemented spigot metric
H40	PE-80 Fusion socket metric
H41	PE-100 Butt fusion spigot SDR11 metric
H43	PE-100 Butt fusion spigto long SDR11 metric
H62	Fixed flange PVC-U JIS
H70	Backing flange PVC-U metric with PVC-U endings
H71	Backing flange PVC-U Zoll ANSI with PVC-U endings
H71 PVCC	Backing flange PVC-U Zoll ANSI with PVC-C endings
H72 PVCU	Backing flange PP-steel metric with PVC-U endings
H72 PVCC	Backing flange PP-steel metric with PVC-C endings
H72 ABS	Backing flange PP-steel metric with ABS endings
H73 PVCU	Backing flange PP-steel Zoll ANSI with PVC-U endings
H73 PVCC	Backing flange PP-steel Zoll ANSI with PVC-C endings
H73 ABS	Backing flange PP-steel Zoll ANSI with ABS endings
H74 PVCU	Backing flange PP-V metric with PVC-U endings
H74 PVCC	Backing flange PP-V metric with PVC-C endings
H74 ABS	Backing flange PP-V metric with ABS endings
H74 PVCC	Backing flange PP-V metric with PVC-C endings
H75 PVCU	Backing flange PP-V ANSI with PVC-U endings
H75 PVCC	Backing flange PP-V ANSI with PVC-C endings
H78 PVCU	Backing flange PP-GF JIS with PVC-U endings
H80	PVC-U valve end blank

Electrical feedback
I33 Electrical feedback with Ag, Ni limit switches
I34 Electrical feedback with Au limit switches

Manual actuated: pressure tight housing
K30 Bonnet pressure tight
K31 Bonnet not pressure tight

Pressure range
M01 PN10
M02 PN16

Pneumatic Actuator DIASTAR
P40 DIASTAR Six FC fail safe to close
P43 DIASTAR Ten FC fail safe to close
P44 DIASTAR Sixteen FC fail safe to close
P45 DIASTAR Sixteen FO fail safe to open
P46 DIASTAR Sixteen DA double acting
P47 DIASTAR Ten FO fail safe to open
P48 DIASTAR Ten DA double acting



Example:
Diaphragm valve with valve body type 515, PVC-U, EPDM diaphragm, DN25, cemented spigots metric, electrical feedback, pressure tight housing, PN10

A21 B01 C08 D11 E01 H05 I33 K30 M01

P =



GF Piping Systems

Diaphragm Valve Type 604 / 605

Packs a punch



The full-plastic diaphragm valve 604 / 605 with integrated pneumatic actuator from GF Piping Systems ensures best flow performance in compact design. With this corrosion free valve we offer an additional product with the most economic price-performance ratio which is suitable for many applications.

Easy installation and operation

- The compact design enables installation in limited spaces
- No re-torqueing needed due to full plastic design without metal parts and screws
- Radially dismountable due to true unions
- Maintenance free
- Same installation length as all GF diaphragm valves and market standard valves
- Integrated optical position feedback
- QR-Code on valve leads to online available product documents

High safety

- Uniform temperature expansion of plastic/plastic connection prevents leakages
- High chemical resistance due to large material range

High Flexibility

- Operation options: FC, FO, DA
- Diaphragms available in PTFE, FPM, EPDM for neutral and aggressive media
- Various connection options with true union or spigot version
- Available Standards: Metric, ASTM, BS, JIS
- Best quality and reliability for high number of cycles
- Long lifetime

Best flow performance

- Linear flow characteristic for simple valve control
- Optimized flow geometry with soft transitions and radii doubles the flow rate
- Suitable for media with low number of particles/solids

Applications

- Chemical Process Industry
- Dosing
- Water Treatment

Technical Data

Dimension	DN 15 (1/2“)
Pressure Rating	PN 6
Body	PVC-U / CPVC (Polyvinylchlorid) PP-H (Polypropylen) PVDF (Polyvinylidenfluorid) Other materials on request
Diaphragms	PTFE with EPDM Backing Diaphragm PTFE with FPM Backing Diaphragm EPDM FPM
Valve Housing	PP-GF (orange)
Connections	**Type 604:** Body with true union connection to match all standard GF unions and end-connections **Type 605:** Body with cementing resp. welding spigots Available on request: Various inserts from the GF range
Mounting	Threaded inserts for safe mounting on valve body
Flow	Double flow rate compared to a typical diaphragm valve
Standards	ISO 9393 EN 12266

Pressure-Temperature Diagram

The following Pressure-Temperature Diagram is based on a lifetime of 25 years with water or similar media.

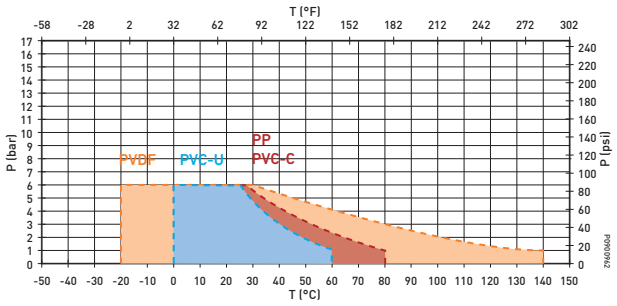

Diaphragm Valve Type 604 / 605

DN	d	inch	Kv 100 l/min	m^3/h	Cv100 gpm
15	20	1/2“	125	7,5	0,55

Kv Values

KV 100 at pressure differnential p = 1 bar

CV100 at pressure differnential p = 1 psi

Features

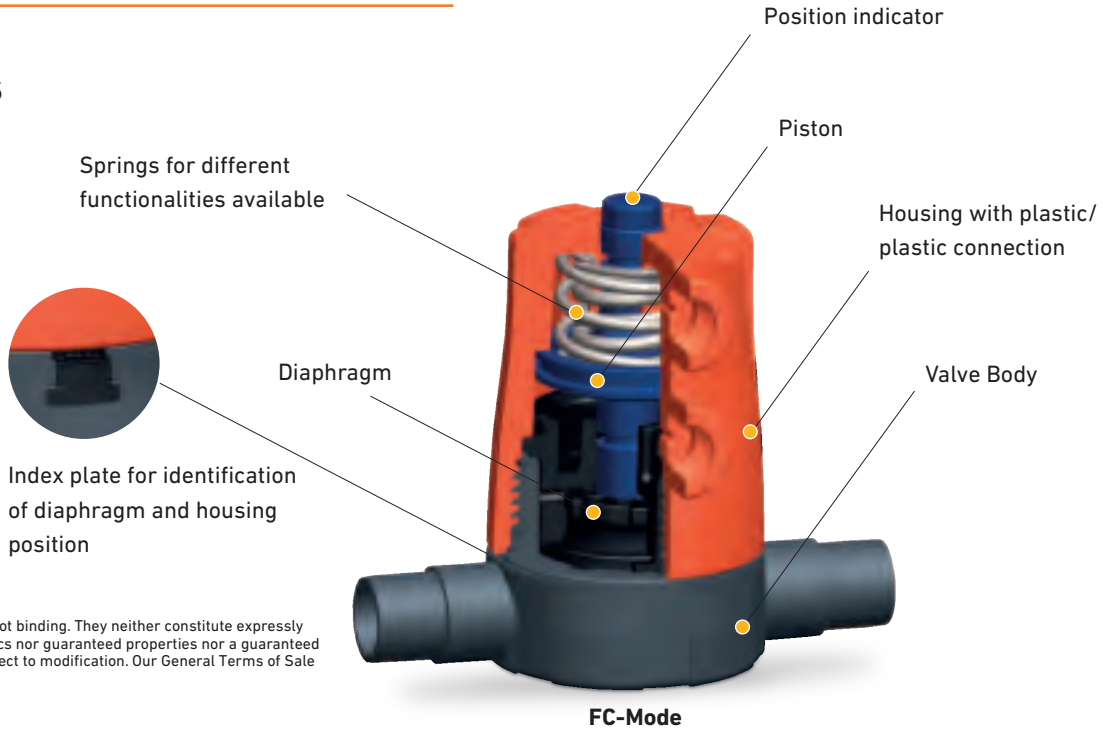

FC-Mode

The technical data are not binding. They neither constitute expressly warranted characteristics nor guaranteed properties nor a guaranteed durability. They are subject to modification. Our General Terms of Sale apply.

Diaphragm valves pneumatic

Diaphragm valves pneumatic type 604 / 605





Diaphragm valve type 604 PVC-U
Unions with solvent cement socket metric

Model:

- Compact full plastic design without screws
- High flow rate
- Actuator housing with thread for easy maintenance
- Quick opening & closing times
- For easy installation and removal
- Market standard installation length

Option:

- Individual configuration of the valve (see diagram)

Actuator	d (mm)	DN (mm)	PN (bar)	kv-value (Δp=1 bar) (l/min)	EPDM Code	FPM Code	Weight (kg)	PTFE/EPDM Code
FC	20	15	6	125	**161 604 012**	**161 604 062**	0.40	**161 604 032**
FO	20	15	6	125	**161 604 014**	**161 604 064**	0.37	**161 604 034**
DA	20	15	6	125	**161 604 015**	**161 604 065**	0.35	**161 604 035**

Actuator	D (mm)	D1_G (inch)	D3 (mm)	H (mm)	H1 (mm)	H2 (mm)	H3 (mm)	H4 (mm)	H7 (mm)	L (mm)	L2 (mm)	M	z (mm)	Lift = Hx (mm)
FC	65	¼	43	89	14	12	46	30	42	128	25	M6	96	6
FO	65	¼	43	89	14	12	46	30	42	128	25	M6	96	6
DA	65	¼	43	89	14	12	46	30	42	128	25	M6	96	6





Diaphragm valve type 605 PVC-U
Cement spigot metric

Model:

- Compact full plastic design without screws
- High flow rate
- Actuator housing with thread for easy maintenance
- Quick opening & closing times
- For easy installation and removal
- Market standard installation length

Option:

- Individual configuration of the valve (see diagram)

Actuator	d (mm)	DN (mm)	PN (bar)	kv-value (Δp=1 bar) (l/min)	EPDM Code	FPM Code	Weight (kg)	PTFE/EPDM Code
FC	20	15	6	125	**161 605 012**	**161 605 062**	0.34	**161 605 032**
FO	20	15	6	125	**161 605 014**	**161 605 064**	0.31	**161 605 034**
DA	20	15	6	125	**161 605 015**	**161 605 065**	0.29	**161 605 035**

Actuator	D (mm)	D1_G (inch)	H (mm)	H1 (mm)	H2 (mm)	H3 (mm)	H4 (mm)	H7 (mm)	L (mm)	L2 (mm)	M	Lift = Hx (mm)
FC	65	¼	89	14	12	46	30	42	124	25	M6	6
FO	65	¼	89	14	12	46	30	42	124	25	M6	6
DA	65	¼	89	14	12	46	30	42	124	25	M6	6





Diaphragm valve type 604 PVC-U
Unions with threaded socket Rp

Model:

- Compact full plastic design without screws
- High flow rate
- Actuator housing with thread for easy maintenance
- Quick opening & closing times
- For easy installation and removal
- Market standard installation length

Option:

- Individual configuration of the valve (see diagram)

Actuator	d (mm)	Rp (inch)	DN (mm)	PN (bar)	kv-value (Δp=1 bar) (l/min)	EPDM Code	FPM Code	Weight (kg)
FC	20	½	15	6	125	**161 604 412**	**161 604 462**	0.40
FO	20	½	15	6	125	**161 604 414**	**161 604 464**	0.37
DA	20	½	15	6	125	**161 604 415**	**161 604 465**	0.35

Actuator	PTFE/EPDM Code
FC	**161 604 432**
FO	**161 604 434**
DA	**161 604 435**

Actuator	D (mm)	D1_G (inch)	D3 (mm)	H (mm)	H1 (mm)	H2 (mm)	H3 (mm)	H4 (mm)	H7 (mm)	L (mm)	L2 (mm)	M	z (mm)	Lift = Hx (mm)
FC	65	¼	43	89	14	12	46	30	42	128	25	M6	102	6
FO	65	¼	43	89	14	12	46	30	42	128	25	M6	102	6
DA	65	¼	43	89	14	12	46	30	42	128	25	M6	102	6

DIASTAR Six



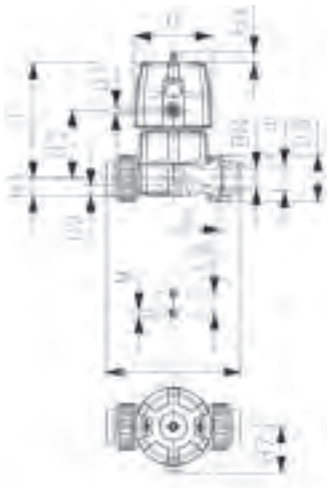

Diaphragm valve DIASTAR Six PVC-U
FC (Fail safe to close)
Unions with solvent cement sockets metric

Model:

- Double flow rate compared to predecessor
- One housing nut replaces four screws
- Rotating air connection at 90° intervals
- For easy installation and removal
- Short overall length

Option:

- Individual configuration of the valve (see diagram)

d (mm)	DN (mm)	PN (bar)	kv-value (Δp=1 bar) (l/min)	EPDM Code	Weight (kg)	FPM Code	Weight (kg)
16	10	6	125	**161 614 011**	0.532		
20	15	6	125	**161 614 012**	0.566	**800 047 327**	0.519
25	20	6	271	**161 614 013**	1.009	**800 047 328**	1.760
32	25	6	481	**161 614 014**	1.246	**800 047 329**	1.259
40	32	6	759	**161 614 015**	2.112	**800 047 330**	3.760
50	40	6	960	**161 614 016**	2.618	**800 047 331**	2.782
63	50	6	1181	**161 614 017**	3.553	**800 047 332**	7.800

d (mm)	D (mm)	D1_G (inch)	H (mm)	H1 (mm)	H2 (mm)	H3 (mm)	H7 (mm)	L (mm)	L2 (mm)	M	z (mm)	Lift = Hx (mm)	closest inch (inch)
16	68	⅛	101	14	12	60	43	170	25	M6	142	7	⅜
20	68	⅛	101	14	12	60	43	128	25	M6	96	7	½
25	96	⅛	132	18	12	73	57	152	25	M6	114	10	¾
32	96	⅛	143	22	12	84	57	166	25	M6	122	13	1
40	120	⅛	173	26	15	99	69	192	45	M8	140	14	1 ¼
50	120	⅛	193	32	15	119	69	222	45	M8	160	16	1 ½
63	120	⅛	205	39	15	132	69	266	45	M8	190	16	2



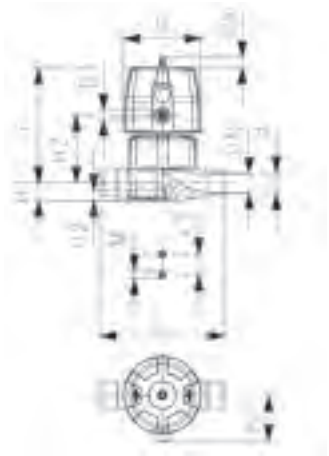

Diaphragm valve DIASTAR Six PVC-U
FC (Fail safe to close)
With solvent cement spigots metric

Model:

- Double flow rate compared to predecessor
- One housing nut replaces four screws
- Rotating air connection at 90° intervals
- Overall length EN 558

Option:

- Individual configuration of the valve (see diagram)

d (mm)	DN (mm)	PN (bar)	kv-value (Δp=1 bar) (l/min)	EPDM Code	Weight (kg)
20	15	6	125	**161 615 012**	0.503
25	20	6	271	**161 615 013**	0.964
32	25	6	481	**161 615 014**	1.137
40	32	6	759	**161 615 015**	2.414
50	40	6	960	**161 615 016**	2.482
63	50	6	1181	**161 615 017**	3.340

table continued on the next page



d (mm)	D (mm)	D1_G (inch)	H (mm)	H1 (mm)	H2 (mm)	H3 (mm)	H7 (mm)	L (mm)	L2 (mm)	M	Lift = Hx (mm)	closest inch (inch)
20	68	⅛	101	14	12	60	43	124	25	M6	7	½
25	96	⅛	132	18	12	73	57	144	25	M6	10	¾
32	96	⅛	143	22	12	84	57	154	25	M6	13	1
40	120	⅛	173	26	15	99	69	174	45	M8	14	1 ¼
50	120	⅛	193	32	15	119	69	194	45	M8	16	1 ½
63	120	⅛	205	39	15	132	69	224	45	M8	16	2



Diaphragm valve DIASTAR Six PVC-U
FC (Fail safe to close)
Unions with threaded sockets Rp

Model:

- Double flow rate compared to predecessor
- One housing nut replaces four screws
- Rotating air connection at 90° intervals
- For easy installation and removal
- Short overall length

Option:

- Individual configuration of the valve (see diagram)



Rp (inch)	DN (mm)	PN (bar)	kv-value (Δp=1 bar) (l/min)	EPDM Code	Weight (kg)
½	15	6	125	**161 614 412**	0.568
¾	20	6	271	**161 614 413**	1.008
1	25	6	481	**161 614 414**	1.277
1 ¼	32	6	759	**161 614 415**	2.068
1 ½	40	6	960	**161 614 416**	2.678
2	50	6	1181	**161 614 417**	3.826

Rp (inch)	D (mm)	D1_G (inch)	H (mm)	H1 (mm)	H2 (mm)	H3 (mm)	H7 (mm)	L (mm)	L2 (mm)	M	z (mm)	Lift = Hx (mm)
½	68	⅛	101	14	12	60	43	128	25	M6	96	7
¾	96	⅛	132	18	12	73	57	152	25	M6	114	10
1	96	⅛	143	22	12	84	57	166	25	M6	122	13
1 ¼	120	⅛	173	26	15	99	69	192	45	M8	140	14
1 ½	120	⅛	193	32	15	119	69	222	45	M8	160	16
2	120	⅛	205	39	15	132	69	266	45	M8	190	16





Diaphragm valve DIASTAR Six PVC-U
FC (Fail safe to close)
With backing flanges PVC-U metric/BS

Model:

- Double flow rate compared to predecessor
- One housing nut replaces four screws
- Rotating air connection at 90° intervals
- Flat sealing faces
- Overall length EN 558
- Connecting dimension: ISO 7005 PN 10, EN 1092 PN 10, DIN 2501 PN 10, BS 4504 PN 10

Option:

- Individual configuration of the valve (see diagram)

d (mm)	DN (mm)	PN (bar)	kv-value (Δp=1 bar) (l/min)	EPDM Code	Weight (kg)
20	15	6	125	**161 617 012**	0.661
25	20	6	271	**161 617 013**	1.180
32	25	6	481	**161 617 014**	1.456
40	32	6	759	**161 617 015**	1.991
50	40	6	960	**161 617 016**	3.018
63	50	6	1181	**161 617 017**	4.159

d (mm)	D (mm)	D1_G (inch)	D3 (mm)	D4 (mm)	D5 (mm)	H (mm)	H1 (mm)	H2 (mm)	H3 (mm)	H7 (mm)	L (mm)	L2 (mm)	M	Lift = Hx (mm)
20	68	⅛	95	65	14	101	14	12	60	43	130	25	M6	7
25	96	⅛	105	75	14	132	18	12	73	57	150	25	M6	10
32	96	⅛	115	85	14	143	22	12	84	57	160	25	M6	13
40	120	⅛	140	100	18	173	26	15	99	69	180	45	M8	14
50	120	⅛	150	110	18	193	32	15	119	69	200	45	M8	16
63	120	⅛	165	125	18	205	39	15	132	69	230	45	M8	16

d (mm)	closest inch (inch)
20	½
25	¾
32	1
40	1 ¼
50	1 ½
63	2

DIASTAR Ten



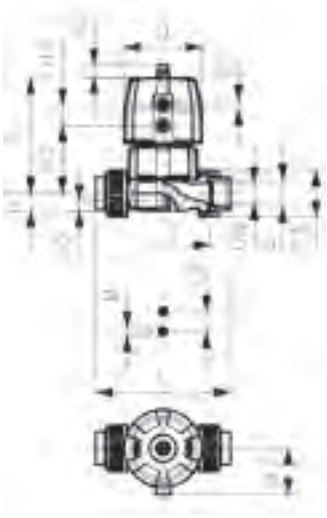

Diaphragm valve DIASTAR Ten PVC-U
FC (Fail safe to close)
Unions with solvent cement sockets metric

Model:

- Double flow rate compared to predecessor
- One housing nut replaces four screws
- Rotating air connection at 90° intervals
- For easy installation and removal
- Short overall length

Option:

- Individual configuration of the valve (see diagram)
- Comprehensive range of accessories available

* PN: PTFE
Working Pressure: **one side**

d (mm)	DN (mm)	PN (psi)	PN* (bar)	kv-value (Δp=1 bar) (l/min)	EPDM Code	Weight (kg)	FPM Code	Weight (kg)
16	10	150	10/10*	125	**161 624 011**	0.567	**161 624 061**	0.592
20	15	150	10/10*	125	**161 624 012**	0.592	**161 624 062**	0.592
25	20	150	10/10*	271	**161 624 013**	1.104	**161 624 063**	1.121
32	25	150	10/10*	481	**161 624 014**	1.337	**161 624 064**	1.347
40	32	150	10/10*	759	**161 624 015**	2.358	**161 624 065**	2.216
50	40	150	10/10*	1263	**161 624 016**	3.928	**161 624 066**	3.804
63	50	150/90*	10/6*	1728	**161 624 017**	5.524	**161 624 067**	4.683

d (mm)	PTFE/EPDM Code	Weight (kg)	PTFE/FPM Code	Weight (kg)
16	**161 624 031**	0.573		
20	**161 624 032**	0.602	**161 624 052**	0.602
25	**161 624 033**	1.111	**161 624 053**	1.111
32	**161 624 034**	1.352	**161 624 054**	1.352
40	**161 624 035**	2.236	**161 624 055**	2.236
50	**161 624 036**	3.958	**161 624 056**	3.958
63	**161 624 037**	4.643	**161 624 057**	4.643

d (mm)	D (mm)	D1_G (inch)	H (mm)	H1 (mm)	H2 (mm)	H3 (mm)	H4 (mm)	H5 (mm)	H7 (mm)	L (mm)	L2 (mm)	M	z (mm)	Lift = Hx (mm)
16	68	⅛	101	14	12	60	24	16	43	170	25	M6	142	7
20	68	⅛	101	14	12	60	24	16	43	128	25	M6	96	7
25	96	⅛	132	18	12	73	25	16	57	152	25	M6	114	10
32	96	⅛	143	22	12	84	25	16	57	166	25	M6	122	13
40	120	⅛	173	26	15	99	26	26	69	192	45	M8	140	15
50	150	¼	214	32	15	119	36	26	88	222	45	M8	160	19
63	150	¼	226	39	15	132	36	26	88	266	45	M8	190	23

d (mm)	closest inch (inch)
16	⅜
20	½
25	¾
32	1
40	1 ¼
50	1 ½
63	2





Diaphragm valve DIASTAR Ten PVC-U
FC (Fail safe to close)
With solvent cement spigots metric

Model:

- Double flow rate compared to predecessor
- One housing nut replaces four screws
- Rotating air connection at 90° intervals
- Overall length EN 558

Option:

- Individual configuration of the valve (see diagram)
- Comprehensive range of accessories available

* PN: PTFE
Working Pressure: **one side**

d (mm)	DN (mm)	PN (psi)	PN* (bar)	kv-value (Δp=1 bar) (l/min)	EPDM Code	Weight (kg)	PTFE/EPDM Code	Weight (kg)
20	15	150	10/10*	125	**161 625 012**	0.497	**161 625 032**	0.539
25	20	150	10/10*	271	**161 625 013**	1.029	**161 625 033**	1.050
32	25	150	10/10*	481	**161 625 014**	1.223	**161 625 034**	1.238
40	32	150	10/10*	759	**161 625 015**	2.026	**161 625 035**	2.114
50	40	150	10/10*	1263	**161 625 016**	3.550	**161 625 036**	3.580
63	50	150/90*	10/6*	1728	**161 625 017**	4.368	**161 625 037**	4.412

d (mm)	D (mm)	D1_G (inch)	H (mm)	H1 (mm)	H2 (mm)	H3 (mm)	H4 (mm)	H5 (mm)	H7 (mm)	L (mm)	L2 (mm)	M	Lift = Hx (mm)	closest inch (inch)
20	68	⅛	101	14	12	60	24	16	43	124	25	M6	7	½
25	96	⅛	132	18	12	73	25	16	57	144	25	M6	10	¾
32	96	⅛	143	22	12	84	25	16	57	154	25	M6	13	1
40	120	⅛	173	26	15	99	26	26	69	174	45	M8	15	1 ¼
50	150	¼	214	32	15	119	36	26	88	194	45	M8	19	1 ½
63	150	¼	226	39	15	132	36	26	88	224	45	M8	23	2



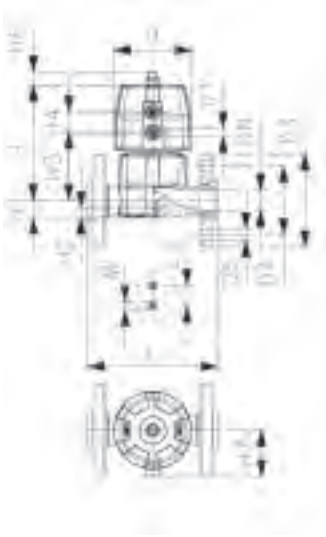

Diaphragm valve DIASTAR Ten PVC-U
FC (Fail safe to close)
With backing flanges PVC-U metric/BS

Model:

- Double flow rate compared to predecessor
- One housing nut replaces four screws
- Rotating air connection at 90° intervals
- Flat sealing faces
- Overall length EN 558
- Connecting dimension: ISO 7005 PN 10, EN 1092 PN 10, DIN 2501 PN 10, BS 4504 PN 10

Option:

- Individual configuration of the valve (see diagram)
- Comprehensive range of accessories available

* PN: PTFE
Working Pressure: **one side**

d (mm)	DN (mm)	PN (psi)	PN* (bar)	kv-value (Δp=1 bar) (l/min)	EPDM Code	Weight (kg)	FPM Code	Weight (kg)
20	15	150	10/10*	125	**161 627 012**	0.657	**161 627 062**	0.687
25	20	150	10/10*	271	**161 627 013**	1.240	**161 627 063**	1.255
32	25	150	10/10*	481	**161 627 014**	1.549	**161 627 064**	1.530
40	32	150	10/10*	759	**161 627 015**	2.570	**161 627 065**	2.141
50	40	150	10/10*	1263	**161 627 016**	4.277	**161 627 066**	4.156
63	50	150/90*	10/6*	1728	**161 627 017**	5.188	**161 627 067**	5.087

d (mm)	PTFE/EPDM Code	Weight (kg)	PTFE/FPM Code	Weight (kg)
20	**161 627 032**	0.654	**161 627 052**	0.654
25	**161 627 033**	1.246	**161 627 053**	1.246
32	**161 627 034**	1.562	**161 627 054**	1.562
40	**161 627 035**	2.161	**161 627 055**	2.161
50	**161 627 036**	4.302	**161 627 056**	4.302
63	**161 627 037**	5.115	**161 627 057**	5.115

d (mm)	D (mm)	D1_G (inch)	D3 (mm)	D4 (mm)	D5 (mm)	H (mm)	H1 (mm)	H2 (mm)	H3 (mm)	H4 (mm)	H5 (mm)	H7 (mm)	L (mm)	L2 (mm)	M
20	68	⅛	95	65	14	101	14	12	60	24	16	43	130	25	M6
25	96	⅛	105	75	14	132	18	12	73	25	16	57	150	25	M6
32	96	⅛	115	85	14	143	22	12	84	25	16	57	160	25	M6
40	120	⅛	140	100	18	173	26	15	99	26	26	69	180	45	M8
50	150	¼	150	110	18	193	32	15	119	36	26	88	200	45	M8
63	150	¼	165	125	18	205	39	15	132	36	26	88	230	45	M8

d (mm)	Lift = Hx (mm)	closest inch (inch)
20	7	½
25	10	¾
32	13	1
40	15	1 ¼
50	19	1 ½
63	23	2



Diaphragm valve DIASTAR Ten PVC-U
FO (Fail safe to open)
Unions with solvent cement sockets metric

Model:

- Double flow rate compared to predecessor
- One housing nut replaces four screws
- Rotating air connection at 90° intervals
- For easy installation and removal
- Short overall length

Option:

- Individual configuration of the valve (see diagram)
- Comprehensive range of accessories available
- PN16 available as a configuration

* PN: PTFE

Working Pressure: **one side**

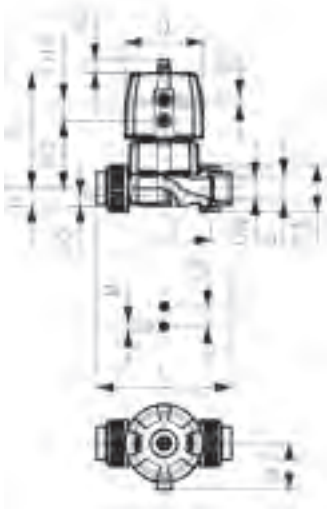

d (mm)	DN (mm)	PN* (bar)	kv-value (Δp=1 bar) (l/min)	EPDM Code	Weight (kg)	PTFE/EPDM Code	Weight (kg)
16	10	10/10*	125	**161 644 011**	0.542	**161 644 031**	0.552
20	15	10/10*	125	**161 644 012**	0.542	**161 644 032**	0.506
25	20	10/10*	271	**161 644 013**	1.308	**161 644 033**	0.958
32	25	10/10*	481	**161 644 014**	1.198	**161 644 034**	1.154
40	32	10/10*	759	**161 644 015**	1.935	**161 644 035**	1.876
50	40	10/10*	1263	**161 644 016**	3.271	**161 644 036**	3.316
63	50	10/10*	1728	**161 644 017**	4.765	**161 644 037**	3.979

d (mm)	D (mm)	D1_G (inch)	H (mm)	H1 (mm)	H2 (mm)	H3 (mm)	H4 (mm)	H5 (mm)	H7 (mm)	L (mm)	L2 (mm)	M	z (mm)	Lift = Hx (mm)
16	68	⅛	101	14	12	60	24	16	43	170	25	M6	142	7
20	68	⅛	101	14	12	60	24	16	43	128	25	M6	96	7
25	96	⅛	132	18	12	73	25	16	57	152	25	M6	114	10
32	96	⅛	143	22	12	84	25	16	57	166	25	M6	122	13
40	120	⅛	173	26	15	99	26	26	69	192	45	M8	140	15
50	150	¼	214	32	15	119	36	26	88	222	45	M8	160	19
63	150	¼	226	39	15	132	36	26	88	266	45	M8	190	23

d (mm)	closest inch (inch)
16	⅜
20	½
25	¾
32	1
40	1 ¼
50	1 ½
63	2



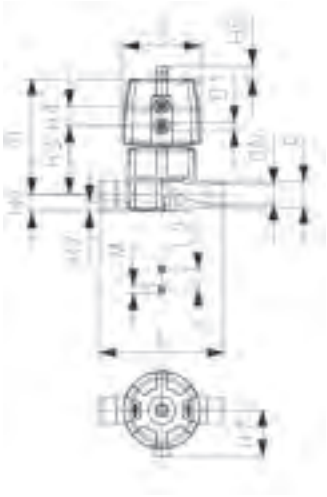

Diaphragm valve DIASTAR Ten PVC-U
FO (Fail safe to open)
With solvent cement spigots metric

Model:

- Double flow rate compared to predecessor
- One housing nut replaces four screws
- Rotating air connection at 90° intervals
- Overall length EN 558

Option:

- Individual configuration of the valve (see diagram)
- Comprehensive range of accessories available
- PN16 available as a configuration

* PN: PTFE
Working Pressure: **one side**

d (mm)	DN (mm)	PN* (bar)	kv-value (Δp=1 bar) (l/min)	EPDM Code	Weight (kg)	PTFE/EPDM Code	Weight (kg)
20	15	10/10*	125	**161 645 012**	0.479	**161 645 032**	0.489
25	20	10/10*	271	**161 645 013**	0.865	**161 645 033**	0.876
32	25	10/10*	481	**161 645 014**	1.038	**161 645 034**	1.058
40	32	10/10*	759	**161 645 015**	1.734	**161 645 035**	1.686
50	40	10/10*	1263	**161 645 016**	3.013	**161 645 036**	3.490
63	50	10/10*	1728	**161 645 017**	3.714	**161 645 037**	4.199

d (mm)	D (mm)	D1_G (inch)	H (mm)	H1 (mm)	H2 (mm)	H3 (mm)	H4 (mm)	H5 (mm)	H7 (mm)	L (mm)	L2 (mm)	M	Lift = Hx (mm)	closest inch (inch)
20	68	⅛	101	14	12	60	24	16	43	124	25	M6	7	½
25	96	⅛	132	18	12	73	25	16	57	144	25	M6	10	¾
32	96	⅛	143	22	12	84	25	16	57	154	25	M6	13	1
40	120	⅛	173	26	15	99	26	26	69	174	45	M8	15	1 ¼
50	150	¼	214	32	15	119	36	26	88	194	45	M8	19	1 ½
63	150	¼	226	39	15	132	36	26	88	224	45	M8	23	2



Diaphragm valve DIASTAR Ten PVC-U
FO (Fail safe to open)
With backing flanges PVC-U metric/BS

Model:

- Double flow rate compared to predecessor
- One housing nut replaces four screws
- Rotating air connection at 90° intervals
- Flat sealing faces
- Overall length EN 558
- Connecting dimension: ISO 7005 PN 10, EN 1092 PN 10, DIN 2501 PN 10, BS 4504 PN 10

Option:

- Individual configuration of the valve (see diagram)
- Comprehensive range of accessories available

* PN: PTFE
Working Pressure: **one side**

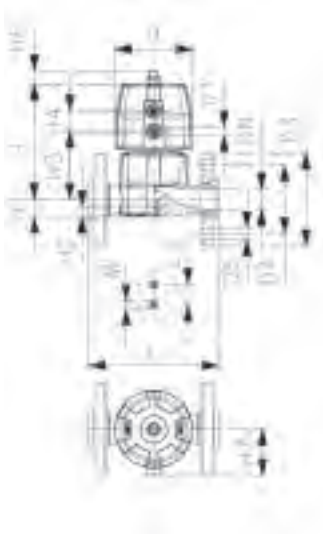

d (mm)	DN (mm)	PN (psi)	PN* (bar)	kv-value (Δp=1 bar) (l/min)	EPDM Code	Weight (kg)	PTFE/EPDM Code	Weight (kg)
20	15	150/150*	10/10*	125	**161 647 012**	0.637	**161 647 032**	0.647
25	20	150/150*	10/10*	271	**161 647 013**	1.081	**161 647 033**	1.092
32	25	150/150*	10/10*	481	**161 647 014**	1.350	**161 647 034**	1.370
40	32	150/150*	10/10*	759	**161 647 015**	1.781	**161 647 035**	1.801
50	40	150/150*	10/10*	1263	**161 647 016**	4.066	**161 647 036**	4.096
63	50	150/150*	10/10*	1728	**161 647 017**	4.997	**161 647 037**	5.025

d (mm)	D (mm)	D1_G (inch)	D3 (mm)	D4 (mm)	D5 (mm)	H (mm)	H1 (mm)	H2 (mm)	H3 (mm)	H4 (mm)	H5 (mm)	H7 (mm)	L (mm)	L2 (mm)	M
20	68	⅛	95	65	14	101	14	12	60	24	16	43	130	25	M6
25	96	⅛	105	75	14	132	18	12	73	25	16	57	150	25	M6
32	96	⅛	115	85	14	143	22	12	84	25	16	57	160	25	M6
40	120	⅛	140	100	18	173	26	15	99	26	26	69	180	45	M8
50	150	¼	150	110	18	214	32	15	119	36	26	88	200	45	M8
63	150	¼	165	125	18	226	39	15	132	36	26	88	230	45	M8

d (mm)	Lift = Hx (mm)	closest inch (inch)
20	7	½
25	10	¾
32	13	1
40	15	1 ¼
50	19	1 ½
63	23	2



Diaphragm valve DIASTAR Ten PVC-U
DA (Double acting)
Unions with solvent cement sockets metric

Model:

- Double flow rate compared to predecessor
- One housing nut replaces four screws
- Rotating air connection at 90° intervals
- For easy installation and removal
- Short overall length

Option:

- Individual configuration of the valve (see diagram)
- Comprehensive range of accessories available
- PN16 available as a configuration

* PN: PTFE
Working Pressure: **one side**

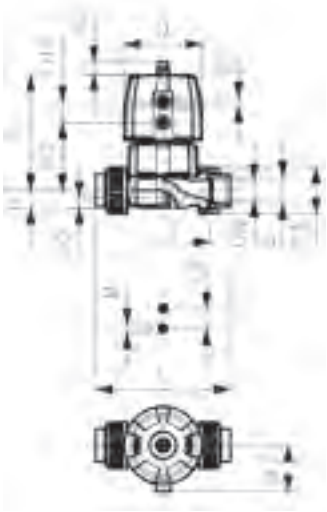

d (mm)	DN (mm)	PN* (bar)	kv-value (Δp=1 bar) (l/min)	EPDM Code	Weight (kg)	PTFE/EPDM Code	Weight (kg)
16	10	10/10*	125	**161 654 011**	0.526	**161 654 031**	0.536
20	15	10/10*	125	**161 654 012**	0.526	**161 654 032**	0.507
25	20	10/10*	271	**161 654 013**	0.923	**161 654 033**	0.922
32	25	10/10*	481	**161 654 014**	1.542	**161 654 034**	1.157
40	32	10/10*	759	**161 654 015**	2.521	**161 654 035**	1.816
50	40	10/10*	1263	**161 654 016**	3.250	**161 654 036**	2.994
63	50	10/10*	1728	**161 654 017**	4.732	**161 654 037**	3.961

d (mm)	D (mm)	D1_G (inch)	H (mm)	H1 (mm)	H2 (mm)	H3 (mm)	H4 (mm)	H5 (mm)	H7 (mm)	L (mm)	L2 (mm)	M	z (mm)	Lift = Hx (mm)
16	68	⅛	101	14	12	60	24	16	43	170	25	M6	142	7
20	68	⅛	101	14	12	60	24	16	43	128	25	M6	96	7
25	96	⅛	132	18	12	73	25	16	57	152	25	M6	114	10
32	96	⅛	143	22	12	84	25	16	57	166	25	M6	122	13
40	120	⅛	173	26	15	99	26	26	69	192	45	M8	140	15
50	150	¼	214	32	15	119	36	26	88	222	45	M8	160	19
63	150	¼	226	39	15	132	36	26	88	266	45	M8	190	23

d (mm)	closest inch (inch)
16	⅜
20	½
25	¾
32	1
40	1 ¼
50	1 ½
63	2



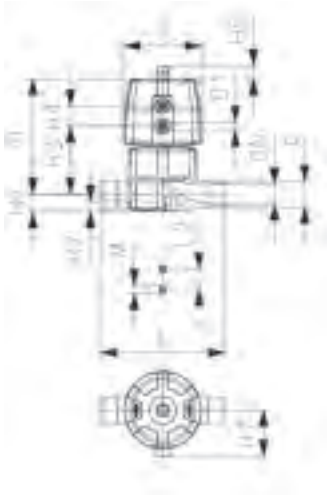

Diaphragm valve DIASTAR Ten PVC-U
DA (Double acting)
With solvent cement spigots metric

Model:

- Double flow rate compared to predecessor
- One housing nut replaces four screws
- Rotating air connection at 90° intervals
- Overall length EN 558

Option:

- Individual configuration of the valve (see diagram)
- Comprehensive range of accessories available
- PN16 available as a configuration

* PN: PTFE
Working Pressure: **one side**

d (mm)	DN (mm)	PN* (bar)	kv-value (Δp=1 bar) (l/min)	EPDM Code	Weight (kg)	PTFE/EPDM Code	Weight (kg)
20	15	10/10*	125	**161 655 012**	0.463	**161 655 032**	0.473
25	20	10/10*	271	**161 655 013**	0.829	**161 655 033**	0.840
32	25	10/10*	481	**161 655 014**	1.008	**161 655 034**	1.028
40	32	10/10*	759	**161 655 015**	1.606	**161 655 035**	1.626
50	40	10/10*	1263	**161 655 016**	2.710	**161 655 036**	2.740
63	50	10/10*	1728	**161 655 017**	3.421	**161 655 037**	3.731

d (mm)	D (mm)	D1_G (inch)	H (mm)	H1 (mm)	H2 (mm)	H3 (mm)	H4 (mm)	H5 (mm)	H7 (mm)	L (mm)	L2 (mm)	M	Lift = Hx (mm)	closest inch (inch)
20	68	⅛	101	14	12	60	24	16	43	124	25	M6	7	½
25	96	⅛	132	18	12	73	25	16	57	144	25	M6	10	¾
32	96	⅛	143	22	12	84	25	16	57	154	25	M6	13	1
40	120	⅛	173	26	15	99	26	26	69	174	45	M8	15	1 ¼
50	150	¼	214	32	15	119	36	26	88	194	45	M8	19	1 ½
63	150	¼	226	39	15	132	36	26	88	224	45	M8	23	2



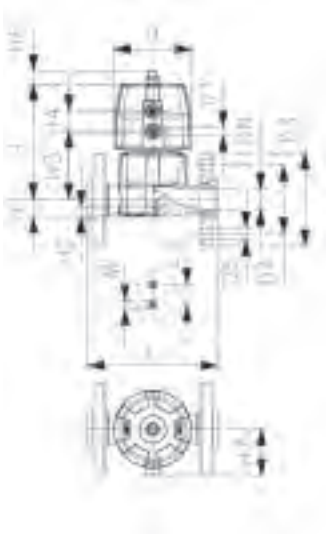

Diaphragm valve DIASTAR Ten PVC-U
DA (Double acting)
With backing flanges PVC-U metric/BS

Model:

- Double flow rate compared to predecessor
- One housing nut replaces four screws
- Rotating air connection at 90° intervals
- Flat sealing faces
- Overall length EN 558
- Connecting dimension: ISO 7005 PN 10, EN 1092 PN 10, DIN 2501 PN 10, BS 4504 PN 10

Option:

- Individual configuration of the valve (see diagram)
- Comprehensive range of accessories available

* PN: PTFE

Working Pressure: **one side**

d (mm)	DN (mm)	PN* (bar)	kv-value (Δp=1 bar) (l/min)	EPDM Code	Weight (kg)	PTFE/EPDM Code	Weight (kg)
20	15	10/10*	125	**161 657 012**	0.621	**161 657 032**	0.631
25	20	10/10*	271	**161 657 013**	1.045	**161 657 033**	1.056
32	25	10/10*	481	**161 657 014**	1.320	**161 657 034**	1.340
40	32	10/10*	759	**161 657 015**	1.721	**161 657 035**	1.741
50	40	10/10*	1263	**161 657 016**	3.316	**161 657 036**	3.346
63	50	10/10*	1728	**161 657 017**	4.247	**161 657 037**	4.275

d (mm)	D (mm)	D1_G (inch)	D3 (mm)	D4 (mm)	D5 (mm)	H (mm)	H1 (mm)	H2 (mm)	H3 (mm)	H4 (mm)	H5 (mm)	H7 (mm)	L (mm)	L2 (mm)	M
20	68	⅛	95	65	14	101	14	12	60	24	16	43	130	25	M6
25	96	⅛	105	75	14	132	18	12	73	25	16	57	150	25	M6
32	96	⅛	115	85	14	143	22	12	84	25	16	57	160	25	M6
40	120	⅛	140	100	18	173	26	15	99	26	26	69	180	45	M8
50	150	¼	150	110	18	214	32	15	119	36	26	88	200	45	M8
63	150	¼	165	125	18	226	39	15	132	36	26	88	230	45	M8

d (mm)	Lift = Hx (mm)	closest inch (inch)
20	7	½
25	10	¾
32	13	1
40	15	1 ¼
50	19	1 ½
63	23	2

DIASTAR TenPlus



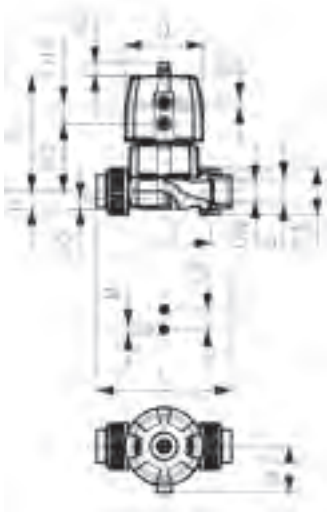

Diaphragm valve DIASTAR TenPlus PVC-U
FC (Fail safe to close)
Unions with solvent cement sockets metric

Model:

- Double flow rate compared to predecessor
- One housing nut replaces four screws
- Rotating air connection at 90° intervals
- For easy installation and removal
- Short overall length

Option:

- Individual configuration of the valve (see diagram)
- Comprehensive range of accessories available
- PN16 available as a configuration

* PN: PTFE
Working Pressure: **both sides**

d (mm)	DN (mm)	PN (psi)	PN* (bar)	kv-value (Δp=1 bar) (l/min)	EPDM Code	Weight (kg)	FPM Code	Weight (kg)
16	10	150/150*	10/10*	125	**161 684 011**	0.992	**161 684 061**	0.992
20	15	150/150*	10/10*	125	**161 684 012**	1.384	**161 684 062**	1.384
25	20	150/150*	10/10*	271	**161 684 013**	1.128	**161 684 063**	1.128
32	25	150/150*	10/10*	481	**161 684 014**	2.048	**161 684 064**	2.048
40	32	150/150*	10/10*	759	**161 684 015**	3.362	**161 684 065**	3.362
50	40	150/150*	10/10*	1263	**161 684 016**	5.585	**161 684 066**	5.585
63	50	150/150*	10/10*	1728	**161 684 017**	7.250	**161 684 067**	7.250

d (mm)	PTFE/EPDM Code	Weight (kg)	PTFE/FPM Code	Weight (kg)
16	**161 684 031**	1.002		
20	**161 684 032**	0.996	**161 684 052**	0.996
25	**161 684 033**	1.131	**161 684 053**	1.131
32	**161 684 034**	2.055	**161 684 054**	2.055
40	**161 684 035**	3.306	**161 684 055**	3.306
50	**161 684 036**	5.242	**161 684 056**	5.242
63	**161 684 037**	6.572	**161 684 057**	6.572

d (mm)	D (mm)	D1_G (inch)	H (mm)	H1 (mm)	H2 (mm)	H3 (mm)	H4 (mm)	H5 (mm)	H7 (mm)	L (mm)	L2 (mm)	M	z (mm)	Lift = Hx (mm)
16	96	⅛	127	14	12	68	25	16	57	170	25	M6	142	7
20	96	⅛	127	14	12	68	25	16	57	128	25	M6	96	7
25	96	⅛	132	18	12	73	25	16	57	152	25	M6	114	10
32	120	⅛	167	22	12	93	26	26	69	166	25	M6	122	13
40	150	¼	196	26	15	101	36	26	88	192	45	M8	140	15
50	180	¼	239	32	15	124	37	26	103	222	45	M8	160	19
63	180	¼	251	39	15	137	37	26	103	266	45	M8	190	23

d (mm)	closest inch (inch)
16	⅜
20	½
25	¾
32	1
40	1 ¼
50	1 ½
63	2



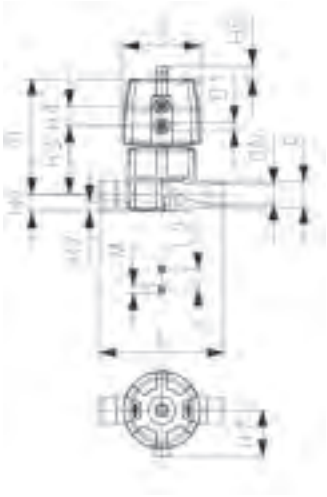

Diaphragm valve DIASTAR TenPlus PVC-U
FC (Fail safe to close)
With solvent cement spigots metric

Model:

- Double flow rate compared to predecessor
- One housing nut replaces four screws
- Rotating air connection at 90° intervals
- Overall length EN 558

Option:

- Individual configuration of the valve (see diagram)
- Comprehensive range of accessories available
- PN16 available as a configuration

* PN: PTFE
Working Pressure: **both sides**

d (mm)	DN (mm)	PN (psi)	PN* (bar)	kv-value (Δp=1 bar) (l/min)	EPDM Code	Weight (kg)	PTFE/EPDM Code	Weight (kg)
20	15	150/150*	10/10*	125	**161 685 012**	0.929	**161 685 032**	0.939
25	20	150/150*	10/10*	271	**161 685 013**	1.039	**161 685 033**	1.050
32	25	150/150*	10/10*	481	**161 685 014**	1.935	**161 685 034**	1.832
40	32	150/150*	10/10*	759	**161 685 015**	3.096	**161 685 035**	3.116
50	40	150/150*	10/10*	1263	**161 685 016**	4.958	**161 685 036**	5.360
63	50	150/150*	10/10*	1728	**161 685 017**	5.668	**161 685 037**	5.696

d (mm)	D (mm)	D1_G (inch)	H (mm)	H1 (mm)	H2 (mm)	H3 (mm)	H4 (mm)	H5 (mm)	H7 (mm)	L (mm)	L2 (mm)	M	Lift = Hx (mm)	closest inch (inch)
20	96	⅛	127	14	12	68	25	16	57	124	25	M6	7	½
25	96	⅛	132	18	12	73	25	16	57	144	25	M6	10	¾
32	120	⅛	167	22	12	93	26	26	69	154	25	M6	13	1
40	150	¼	196	26	15	101	36	26	88	174	45	M8	15	1 ¼
50	180	¼	239	32	15	124	37	26	103	194	45	M8	19	1 ½
63	180	¼	251	39	15	137	37	26	103	224	45	M8	23	2



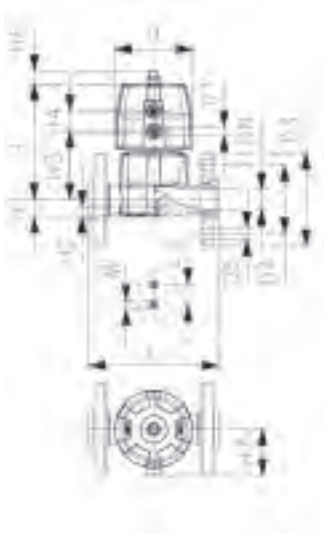

Diaphragm valve DIASTAR TenPlus PVC-U
FC (Fail safe to close)
With backing flanges PVC-U metric/BS

Model:

- Double flow rate compared to predecessor
- One housing nut replaces four screws
- Rotating air connection at 90° intervals
- Flat sealing faces
- Overall length EN 558
- Connecting dimension: ISO 7005 PN 10, EN 1092 PN 10, DIN 2501 PN 10, BS 4504 PN 10

Option:

- Individual configuration of the valve (see diagram)
- Comprehensive range of accessories available

* PN: PTFE
Working Pressure: **both sides**

d (mm)	DN (mm)	PN* (bar)	kv-value (Δp=1 bar) (l/min)	EPDM Code	Weight (kg)	FPM Code	Weight (kg)
20	15	10/10*	125	**161 687 012**	1.087	**161 687 062**	1.087
25	20	10/10*	271	**161 687 013**	1.255	**161 687 063**	1.255
32	25	10/10*	481	**161 687 014**	2.124	**161 687 064**	2.124
40	32	10/10*	759	**161 687 015**	3.211	**161 687 065**	3.211
50	40	10/10*	1263	**161 687 016**	5.564	**161 687 066**	5.564
63	50	10/10*	1728	**161 687 017**	6.922	**161 687 067**	6.922

d (mm)	PTFE/EPDM Code	Weight (kg)	PTFE/FPM Code	Weight (kg)
20	**161 687 032**	1.097	**161 687 052**	1.097
25	**161 687 033**	1.266	**161 687 053**	1.266
32	**161 687 034**	2.144	**161 687 054**	2.144
40	**161 687 035**	3.231	**161 687 055**	3.231
50	**161 687 036**	5.594	**161 687 056**	5.594
63	**161 687 037**	6.522	**161 687 057**	6.522

d (mm)	D (mm)	D1_G (inch)	D3 (mm)	D4 (mm)	D5 (mm)	H (mm)	H1 (mm)	H2 (mm)	H3 (mm)	H4 (mm)	H5 (mm)	H7 (mm)	L (mm)	L2 (mm)	M
20	96	⅛	95	65	14	127	14	12	68	25	16	57	130	25	M6
25	96	⅛	105	75	14	132	18	12	73	25	16	57	150	25	M6
32	120	⅛	115	85	14	167	22	12	93	26	26	69	160	25	M6
40	150	¼	140	100	18	196	26	15	101	36	26	88	180	45	M8
50	180	¼	150	110	18	239	32	15	124	37	26	103	200	45	M8
63	180	¼	165	125	18	251	39	15	137	37	26	103	230	45	M8

d (mm)	Lift = Hx (mm)	closest inch (inch)
20	7	½
25	10	¾
32	13	1
40	15	1 ¼
50	19	1 ½
63	23	2

DIASTAR big dimensions



Diaphragm valve type DIASTAR PVC-U
Series 025 FC (Fail safe to close)
With fixed flanges PVC-U metric

Model:

- Connecting dimension: ISO 7005 / EN 1092 / DIN 25 PN10 / BS4504
- With position indicator / Working pressure: **one side**

* with backing flanges PVC-U metric
** Connecting dimensions DN80 and DN150 metric and Inch ANSI B16.5

	d (mm)	Size (inch)	DN (mm)	PN (bar)	kv-value (Δp=1 bar) (l/min)	EPDM Code	Weight (kg)	PTFE/EPDM Code	Weight (kg)
*	75	2 ½	65	10	992	**199 025 127**	15.468	**199 025 157**	15.115
**	90	3	80	10	1700	**199 025 128**	17.400	**199 025 158**	17.604
	110	4	100	6	2700	**199 025 129**	7.963	**199 025 159**	27.748
**	160	6	150	6	6033	**199 025 130**	35.000		

	d (mm)	D (mm)	D1_G (inch)	D2 (mm)	D3[M] (mm)	D4 (mm)	H (mm)	H1 (mm)	H2 (mm)	H3 (mm)	H4 (mm)	H5 (mm)	H6 (mm)	H7 (mm)	H9 (mm)
*	75	280	¼	185	8	145	344	148	24	46	100	129	195	298	46
**	90	280	¼	200	12	160	348	150	24	46	100	129	195	302	57
	110	335	¼	225	12	180	395	176	24	46	100	129	195	349	69
**	160	335	¼	285	12	240	455	237	24	46	100	129	195	409	108

	d (mm)	H10 (mm)	L (mm)	L2 (mm)	L3 (mm)
*	75	15	290	70	
**	90	15	310	120	
	110	20	350	120	
**	160	20	480	100	200

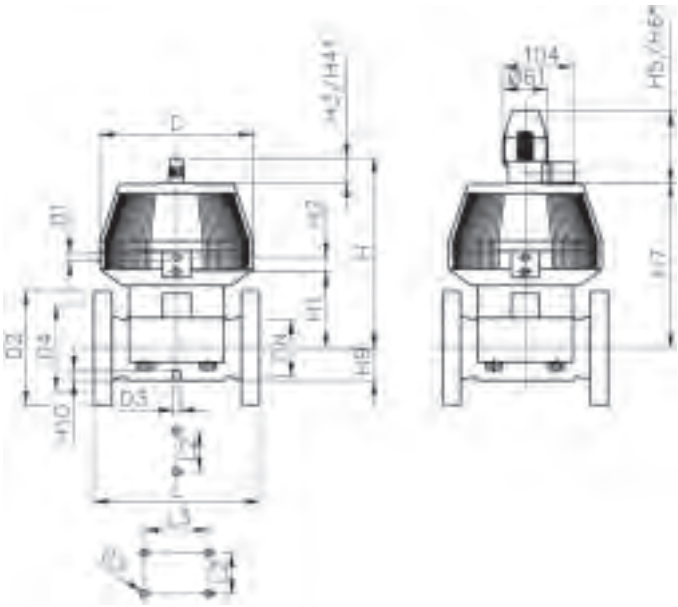



Diaphragm valve type DIASTAR PVC-U
Series 025 FO (Fail safe to open)
With fixed flanges PVC-U metric

Model:

- Connecting dimension: ISO 7005 / EN 1092 / DIN 25 PN10 / BS4504
- With position indicator / Working pressure: **one side**

* with backing flanges PVC-U metric
** Connecting dimensions DN80 and DN150 metric and Inch ANSI B16.5

	d (mm)	Size (inch)	DN (mm)	PN (bar)	kv-value (Δp=1 bar) (l/min)	EPDM Code	Weight (kg)	PTFE/EPDM Code	Weight (kg)
*	75	2 ½	65	10	992	**199 025 137**	11.744	**199 025 167**	13.600
**	90	3	80	10	1700	**199 025 138**	13.950	**199 025 168**	14.137
	110	4	100	6	2700	**199 025 139**	21.901	**199 025 169**	24.700
**	160	6	150	6	6033	**199 025 140**	35.000	**199 025 170**	35.000

	d (mm)	D (mm)	D1_G (inch)	D2 (mm)	D3[M] (mm)	D4 (mm)	H (mm)	H1 (mm)	H2 (mm)	H3 (mm)	H4 (mm)	H5 (mm)	H6 (mm)	H7 (mm)	H9 (mm)
*	75	280	¼	185	8	145	344	148	24	46	100	129	195	298	46
**	90	280	¼	200	12	160	348	150	24	46	100	129	195	302	57
	110	335	¼	225	12	180	395	176	24	46	100	129	195	349	69
**	160	335	¼	285	12	240	455	237	24	46	100	129	195	409	108

	d (mm)	H10 (mm)	L (mm)	L2 (mm)	L3 (mm)
*	75	15	290	70	
**	90	15	310	120	
	110	20	350	120	
**	160	20	480	100	200

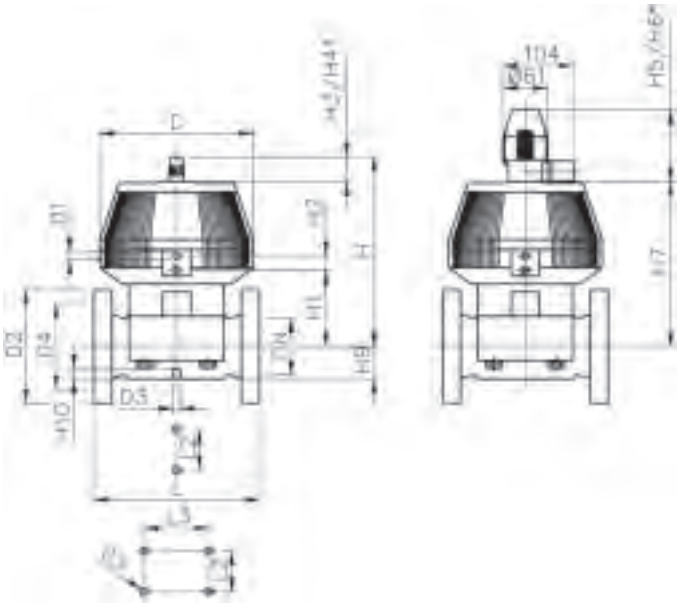



Diaphragm valve type DIASTAR PVC-U
Series 025 DA (Double acting)
With fixed flanges PVC-U metric

Model:

- Connecting dimension: ISO 7005 / EN 1092 / DIN 25 PN10 / BS4504
- With position indicator / Working pressure: **one side**

* with backing flanges PVC-U metric
** Connecting dimensions DN80 and DN150 metric and Inch ANSI B16.5

	d (mm)	Size (inch)	DN (mm)	PN (bar)	kv-value (Δp=1 bar) (l/min)	EPDM Code	Weight (kg)	PTFE/EPDM Code	Weight (kg)
*	75	2 ½	65	10	992	**199 025 147**	12.487	**199 025 177**	12.000
**	90	3	80	10	1700	**199 025 148**	14.590	**199 025 178**	17.400
	110	4	100	6	2700	**199 025 149**	23.343	**199 025 179**	24.700
**	160	6	150	6	6033	**199 025 150**	35.000	**199 025 180**	35.000

	d (mm)	D (mm)	D1_G (inch)	D2 (mm)	D3[M] (mm)	D4 (mm)	H (mm)	H1 (mm)	H2 (mm)	H3 (mm)	H4 (mm)	H5 (mm)	H6 (mm)	H7 (mm)	H9 (mm)
*	75	280	¼	185	8	145	344	148	24	46	100	129	195	298	46
**	90	280	¼	200	12	160	348	150	24	46	100	129	195	302	57
	110	335	¼	225	12	180	395	176	24	46	100	129	195	349	69
**	160	335	¼	285	12	240	455	237	24	46	100	129	195	409	108

	d (mm)	H10 (mm)	L (mm)	L2 (mm)	L3 (mm)
*	75	15	290	70	
**	90	15	310	120	
	110	20	350	120	
**	160	20	480	100	200

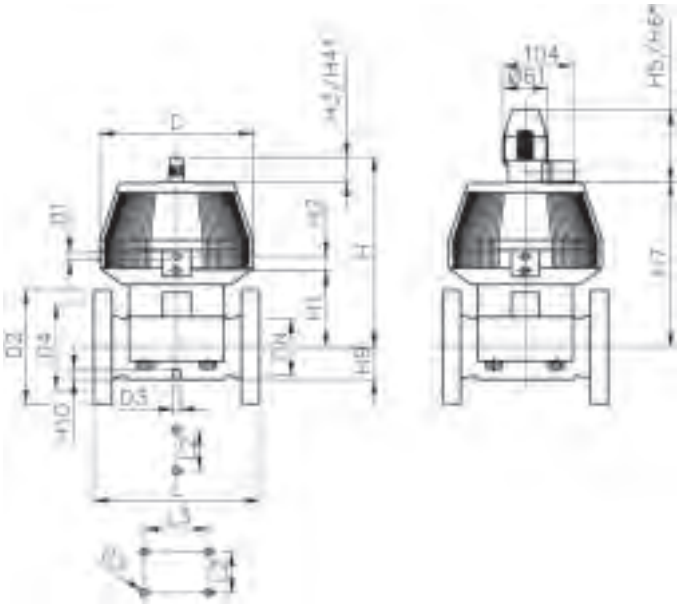

Butterfly valves type 567



Butterfly valve type 567 PVC-U
Hand lever with ratchet settings

Model:

- Up to DN 300: Overall length according to EN558 (DN 50-200: line 25, DN250, 300 line 16), ISO 5752
- Connecting dimension: ISO 7005 PN 10, EN 1092 PN 10, DIN 2501 PN 10, ANSI/ASME B 16.5 Class 150, BS 1560: 1989, BS 4504, JIS B 2220
- We recommend for the dimensions DN250 and DN300 only 6 bar maximum system pressure for the hand lever version

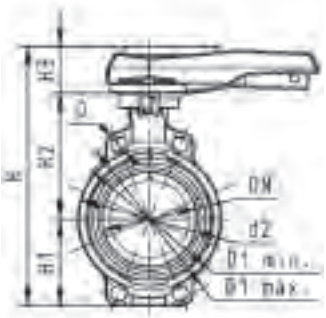

d (mm)	Size (inch)	DN (mm)	PN (bar)	kv-value (Δp=1 bar) (l/min)	EPDM Code	FPM Code	Weight (kg)
63	2	50	10	1470	**161 567 002**	**161 567 022**	1.259
75	2 ½	65	10	2200	**161 567 003**	**161 567 023**	1.799
90	3	80	10	3000	**161 567 004**	**161 567 024**	1.534
110	4	100	10	6500	**161 567 005**	**161 567 025**	2.235
140	5	125	10	11500	**161 567 006**	**161 567 026**	2.799
160	6	150	10	16600	**161 567 007**	**161 567 027**	3.791
225	8	200	10	39600	**161 567 008**	**161 567 028**	6.570
280	10	250	10	55200	**161 567 009**	**161 567 029**	12.998
315	12	300	10	80000	**161 567 010**	**161 567 030**	19.139

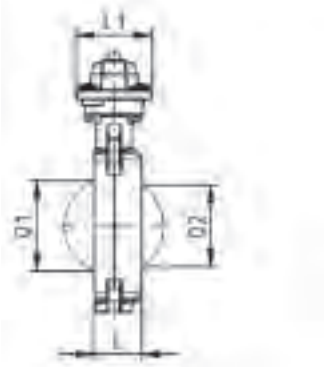

d (mm)	D (mm)	D1 min. (mm)	D1 max. (mm)	d2 (mm)	H (mm)	H1 (mm)	H2 (mm)	H3 (mm)	L (mm)	L1 (mm)	L2 (mm)	Q1 (mm)	Q2 (mm)
63	19	120.0	125.0	104	264	77	134	54	45	106	205	40	
75	19	139.7	145.0	115	277	83	140	54	46	106	205	54	35
90	19	150.0	160.0	131	289	89	146	54	49	106	205	67	50
110	19	175.0	190.5	161	325	104	167	55	56	106	255	88	74
140	23	210.0	215.9	187	352	117	181	55	64	106	255	113	97
160	24	241.3	241.3	215	373	130	189	55	72	106	255	139	123
225	23	290.0	295.0	267	435	158	210	67	73	140	408	178	169
280	25	353.0	362.0	329	554	205	264	85	113	149	408	210	207
315	25	400.0	432.0	379	598	228	285	85	113	149	408	256	253

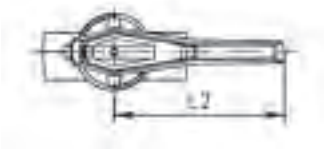





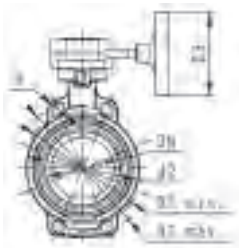



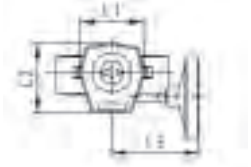



Butterfly valve type 567 PVC-U
Reduction gear with handwheel

Model:

- Up to DN 300: Overall length according to EN558 (DN 50-200: line 25, DN250, 300 line 16), ISO 5752
- Connecting dimension: ISO 7005 PN 10, EN 1092 PN 10, DIN 2501 PN 10, ANSI/ASME B 16.5 Class 150, BS 1560: 1989, BS 4504, JIS B 2220

d (mm)	Size (inch)	DN (mm)	PN (bar)	kv-value (Δp=1 bar) (l/min)	EPDM Code	Weight (kg)	FPM Code	Weight (kg)
63	2	50	10	1470	**161 567 042**	3.078	**161 567 062**	3.082
75	2 ½	65	10	2200	**161 567 043**	3.181	**161 567 063**	3.186
90	3	80	10	3000	**161 567 044**	3.346	**161 567 064**	3.353
110	4	100	10	6500	**161 567 045**	4.022	**161 567 065**	3.973
140	5	125	10	11500	**161 567 046**	4.185	**161 567 066**	4.544
160	6	150	10	16600	**161 567 047**	5.174	**161 567 067**	5.181
225	8	200	10	39600	**161 567 048**	7.072	**161 567 068**	8.339
280	10	250	10	51000	**161 567 049**	14.741	**161 567 069**	15.115
315	12	300	10	73000	**161 567 050**	19.254	**161 567 070**	35.000
355	14	350	6	90000	**161 567 051**	50.000	**161 567 071**	55.000
400	16	400	6	115000	**161 567 052**	60.000	**161 567 072**	60.000

d (mm)	d2 (mm)	D (mm)	D1 min. (mm)	D1 max. (mm)	D3 (mm)	H1 (mm)	H2 (mm)	H3 (mm)	L (mm)	L1 (mm)	L2 (mm)	L3 (mm)	Q1 (mm)	Q2 (mm)
63	104	19	120	125	160	77	134	59	45	80	114	155	40	
75	115	19	140	145	150	83	140	59	46	80	114	155	54	35
90	131	19	150	160	150	89	146	59	49	80	114	155	67	50
110	160	19	175	191	150	104	167	59	56	80	114	155	88	74
140	187	23	210	216	150	117	181	59	64	80	114	155	113	97
160	215	24	241	241	160	130	189	59	72	80	114	155	139	123
225	267	23	290	295	160	158	210	59	73	80	114	155	178	169
280	329	25	353	362	200	205	264	67	113	100	131	170	210	207
315	379	25	400	432	200	228	285	67	113	100	131	170	256	253
355	535	29	445	477	200	268	410	69	129	180	168	218	325	305
400	595	29	510	540	200	300	435	69	169	180	195	218	353	350





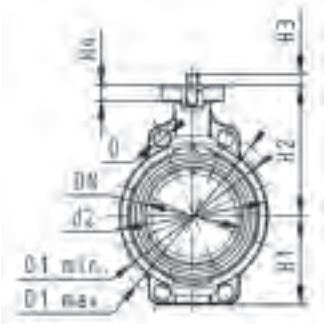

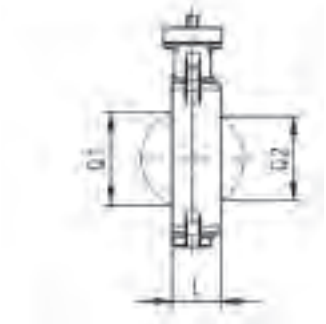

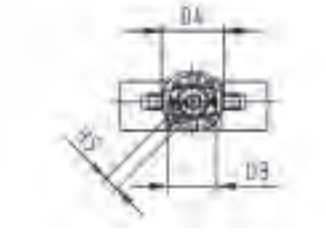



Butterfly valve type 567 PVC-U
Bare shaft

Model:

- Up to DN 300: Overall length according to EN558 (DN 50-200: line 25, DN250, 300 line 16), ISO 5752
- Connecting dimension: ISO 7005 PN 10, EN 1092 PN 10, DIN 2501 PN 10, ANSI/ASME B 16.5 Class 150, BS 1560: 1989, BS 4504, JIS B 2220
- Interface F07 for the dimensions DN50-200 according to DIN/ISO 5211
- Interface F10 for the dimensions DN250-300 according to DIN/ISO 5211
- Interface F12 for the dimensions DN350-400 according to DIN/ISO 5211

d (mm)	Size (inch)	DN (mm)	PN (bar)	kv-value (Δp=1 bar) (l/min)	EPDM Code	Weight (kg)	FPM Code	Weight (kg)
63	2	50	10	1470	**161 567 802**	0.778	**161 567 822**	0.787
75	2 ½	65	10	2200	**161 567 803**	0.921	**161 567 823**	0.895
90	3	80	10	3000	**161 567 804**	1.052	**161 567 824**	1.068
110	4	100	10	6500	**161 567 805**	1.641	**161 567 825**	2.092
140	5	125	10	11500	**161 567 806**	2.266	**161 567 826**	2.236
160	6	150	10	16600	**161 567 807**	3.179	**161 567 827**	3.238
225	8	200	10	39600	**161 567 808**	5.063	**161 567 828**	5.127
280	10	250	10	51000	**161 567 809**	11.588	**161 567 829**	11.735
315	12	300	10	73000	**161 567 810**	16.050	**161 567 830**	15.936
355	14	350	6	90000	**161 567 811**	45.000	**161 567 831**	45.000
400	16	400	6	115000	**161 567 812**	55.000	**161 567 832**	55.000

d (mm)	d2 (mm)	D (mm)	D1 min. (mm)	D1 max. (mm)	D3 (mm)	D4 (mm)	H1 (mm)	H2 (mm)	H3 (mm)	H4 (mm)	H5 (mm)	L (mm)	Q1 (mm)	Q2 (mm)
63	104	19	120	125	70	90	77	134	27	23	11	45	40	
75	115	19	140	145	70	90	83	140	27	23	11	46	54	35
90	131	19	150	160	70	90	89	146	27	23	11	49	67	50
110	161	19	175	191	70	90	104	167	16	23	14	56	88	74
140	187	23	210	216	70	90	117	181	16	23	14	64	113	97
160	215	24	241	241	70	90	130	189	19	23	17	72	139	123
225	267	23	290	295	70	90	158	210	19	23	17	73	178	169
280	329	25	353	362	102	125	205	264	40	23	22	113	210	207
315	379	25	400	432	102	125	228	285	40	23	22	113	256	253
355	535	29	445	477	125	180	268	410	31	100	27	129	325	305
400	593	29	510	540	125	180	300	435	31	100	27	169	353	350

Butterfly valves electric type 145



Butterfly valve type 145 PVC-U 100-230V
With manual override

Model:

- Voltage 100-230 V, 50-60 Hz
- Factory set control range 90°<)
- Heating element, position feedback (Open/Close/ Middle)
- Overall length according to EN 558, ISO 5752 (DN50-200 line 25, DN250-300 line 16)
- Connecting dimension: ISO 7005 PN 10, EN 1092 PN 10, DIN 2501 PN 10, ANSI/ASME B 16.5 Class 150, BS 1560: 1989, BS 4504, JIS B 2220

Option:

- Other valve and actuator configurations available
- Optional accessories: Fail-safe return unit, Monitoring board, Position controller, Profibus DP board

d (mm)	Size (inch)	DN (mm)	PN (bar)	kv-value (Δp=1 bar) (l/min)	EPDM Code	Weight (kg)	FPM Code	Weight (kg)
63	2	50	10	1470	**199 145 002**	6.138	**199 145 022**	5.682
75	2 ½	65	10	2200	**199 145 003**	7.213	**199 145 023**	5.786
90	3	80	10	3000	**199 145 004**	6.360	**199 145 024**	5.953
110	4	100	10	6500	**199 145 005**	6.990	**199 145 025**	6.573
140	5	125	10	11500	**199 145 006**	7.508	**199 145 026**	7.147
160	6	150	10	16600	**199 145 007**	10.062	**199 145 027**	8.154
225	8	200	10	39600	**199 145 008**	14.106	**199 145 028**	14.134

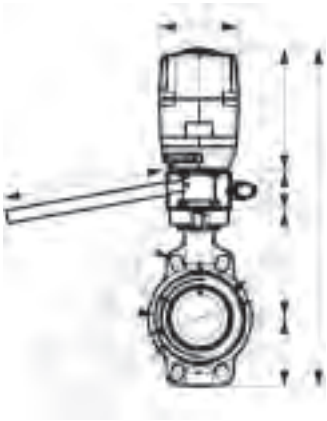

d (mm)	Actuator unit type	d2 (mm)	D (mm)	D1 min. (mm)	D1 max. (mm)	H (mm)	H1 (mm)	H2 (mm)	H3 (mm)	H4 (mm)	L (mm)	L1 (mm)	L2 (mm)	L3 (mm)
63	EA-45	104	19	120	125	475	77	134	188	75	45	122	180	250
75	EA-45	115	19	140	145	488	83	140	188	75	46	122	180	250
90	EA-120	131	19	150	160	488	89	146	188	60	49	122	180	250
110	EA-120	161	19	175	191	520	104	167	188	60	56	122	180	250
140	EA-120	187	23	210	216	547	117	181	188	60	64	122	180	250
160	EA-120	215	24	241	241	568	130	189	188	60	72	122	180	250
225	EA-250	267	23	290	295	635	158	210	208	60	73	122	180	250

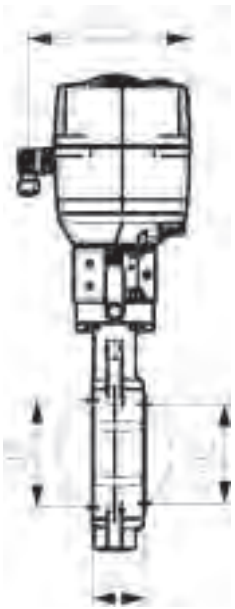

d (mm)	Q1 (mm)	Q2 (mm)
63	40	
75	54	35
90	67	50
110	88	74
140	113	97
160	139	123
225	178	169



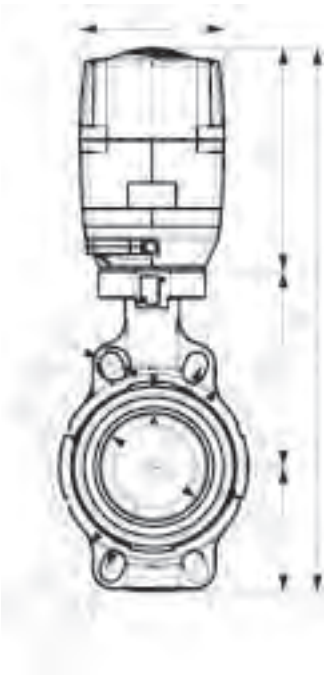

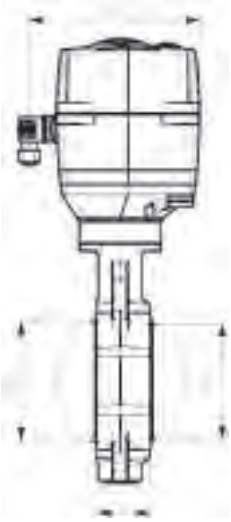

Butterfly valve type 145 PVC-U 100-230V
Without manual override

Model:

- Voltage 100-230 V, 50-60 Hz
- Factory set control range 90°<)
- Heating element, position feedback (Open/Close/ Middle)
- Overall length according to EN 558, ISO 5752 (DN50-200 line 25, DN250-300 line 16)
- Connecting dimension: ISO 7005 PN 10, EN 1092 PN 10, DIN 2501 PN 10, ANSI/ASME B 16.5 Class 150, BS 1560: 1989, BS 4504, JIS B 2220

Option:

- Other valve and actuator configurations available
- Optional accessories: Fail-safe return unit, Monitoring board, Position controller, Profibus DP board

d (mm)	Size (inch)	DN (mm)	PN (bar)	kv-value (Δp=1 bar) (l/min)	EPDM Code	Weight (kg)	FPM Code	Weight (kg)
63	2	50	10	1470	**199 145 042**	4.408	**199 145 062**	4.182
75	2 ½	65	10	2200	**199 145 043**	4.509	**199 145 063**	4.286
90	3	80	10	3000	**199 145 044**	4.675	**199 145 064**	4.453
110	4	100	10	6500	**199 145 045**	6.890	**199 145 065**	5.073
140	5	125	10	11500	**199 145 046**	5.626	**199 145 066**	5.644
160	6	150	10	39600	**199 145 047**	6.631	**199 145 067**	6.654
225	8	200	10	39600	**199 145 048**	12.606	**199 145 068**	12.634
280	10	250	6	55200	**199 145 049**	14.334	**199 145 069**	14.481
315	12	300	4	80000	**199 145 050**	19.546	**199 145 070**	19.546

d (mm)	Actuator unit type	d2 (mm)	D (mm)	D1 min. (mm)	D1 max. (mm)	H (mm)	H1 (mm)	H2 (mm)	H3 (mm)	L (mm)	L1 (mm)	L2 (mm)	Q1 (mm)	Q2 (mm)
63	EA-45	104	19	120	125	415	77	134	188	45	122	180	40	
75	EA-45	115	19	140	145	428	83	140	188	46	122	180	54	35
90	EA-120	131	19	150	160	428	89	146	188	49	122	180	67	50
110	EA-120	161	19	175	191	460	104	167	188	56	122	180	88	74
140	EA-120	187	23	210	216	487	117	181	188	64	122	180	113	97
160	EA-120	215	24	241	241	508	130	189	188	72	122	180	139	169
225	EA-250	267	23	290	295	575	158	210	208	73	122	180	178	169
280	EA-250	329	25	353	362	677	205	264	208	113	122	180	210	207
315	EA-250	379	25	400	432	721	228	285	208	113	122	180	256	253



Butterfly valve type 145 PVC-U 24V
With manual override

Model:

- Voltage 24 V AC/DC
- Factory set control range 90°<)
- Heating element, position feedback (Open/Close/ Middle)
- Overall length according to EN 558, ISO 5752 (DN50-200 line 25, DN250-300 line 16)
- Connecting dimension: ISO 7005 PN 10, EN 1092 PN 10, DIN 2501 PN 10, ANSI/ASME B 16.5 Class 150, BS 1560: 1989, BS 4504, JIS B 2220

Option:

- Other valve and actuator configurations available
- Optional accessories: Fail-safe return unit, Monitoring board, Position controller, Profibus DP board

d (mm)	Size (inch)	DN (mm)	PN (bar)	kv-value (Δp=1 bar) (l/min)	EPDM Code	Weight (kg)
63	2	50	10	1470	**199 145 082**	6.116
75	2 ½	65	10	2200	**199 145 083**	6.183
90	3	80	10	3000	**199 145 084**	6.327
110	4	100	10	6500	**199 145 085**	6.975
140	5	125	10	11500	**199 145 086**	9.142
160	6	150	10	16600	**199 145 087**	8.418
225	8	200	10	39600	**199 145 088**	14.106

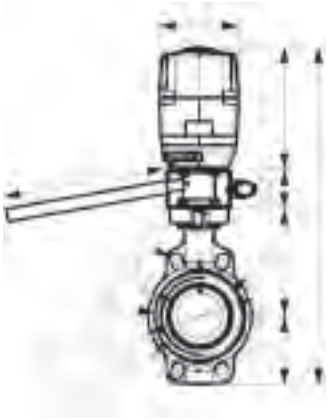

d (mm)	Actuator unit type	d2 (mm)	D (mm)	D1 min. (mm)	D1 max. (mm)	H (mm)	H1 (mm)	H2 (mm)	H3 (mm)	H4 (mm)	L (mm)	L1 (mm)	L2 (mm)	L3 (mm)
63	EA-45	104	19	120	125	475	77	134	188	75	45	122	180	250
75	EA-45	115	19	140	145	488	83	140	188	75	46	122	180	250
90	EA-120	131	19	150	160	488	89	146	188	60	49	122	180	250
110	EA-120	161	19	175	191	520	104	167	188	60	56	122	180	250
140	EA-120	187	23	210	216	547	117	181	188	60	64	122	180	250
160	EA-120	215	24	241	241	568	130	189	188	60	72	122	180	250
225	EA-250	267	23	290	295	635	158	210	208	60	73	122	180	250

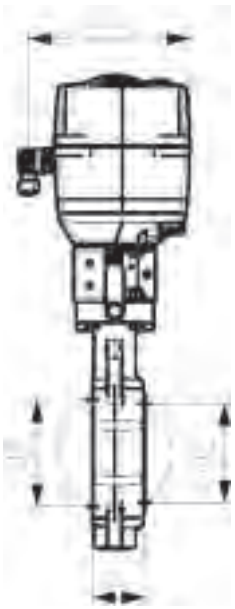

d (mm)	Q1 (mm)	Q2 (mm)
63	40	
75	54	35
90	67	50
110	88	74
140	113	97
160	139	123
225	178	169



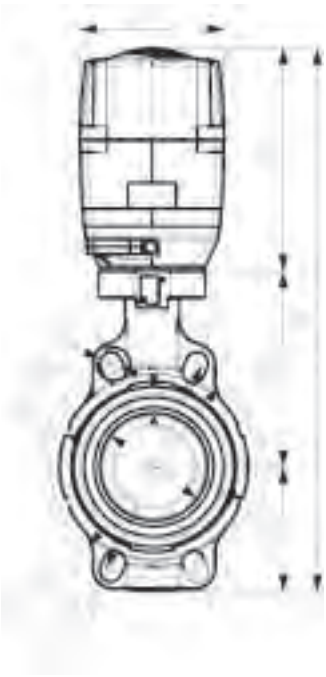

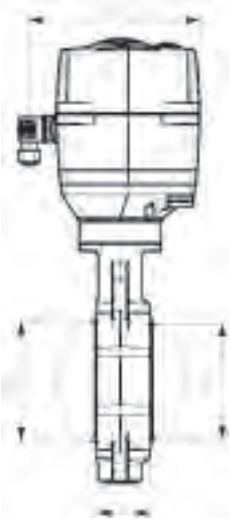

Butterfly valve type 145 PVC-U 24V
Without manual override

Model:

- Voltage 24 V AC/DC
- Factory set control range 90°<)
- Heating element, position feedback (Open/Close/ Middle)
- Overall length according to EN 558, ISO 5752 (DN50-200 line 25, DN250-300 line 16)
- Connecting dimension: ISO 7005 PN 10, EN 1092 PN 10, DIN 2501 PN 10, ANSI/ASME B 16.5 Class 150, BS 1560: 1989, BS 4504, JIS B 2220

Option:

- Other valve and actuator configurations available
- Optional accessories: Fail-safe return unit, Monitoring board, Position controller, Profibus DP board

d (mm)	Size (inch)	DN (mm)	PN (bar)	kv-value (Δp=1 bar) (l/min)	EPDM Code	Weight (kg)	FPM Code	Weight (kg)
63	2	50	10	1470	**199 145 122**	4.178	**199 145 142**	5.073
75	2 ½	65	10	2200	**199 145 123**	4.281	**199 145 143**	5.073
90	3	80	10	3000	**199 145 124**	4.660	**199 145 144**	5.073
110	4	100	10	6500	**199 145 125**	5.252	**199 145 145**	5.073
140	5	125	10	11500	**199 145 126**	5.793	**199 145 146**	4.286
160	6	150	10	16600	**199 145 127**	6.631	**199 145 147**	4.182
225	8	200	10	39600	**199 145 128**	12.606	**199 145 148**	12.634
280	10	250	6	55200	**199 145 129**		**199 145 149**	
315	12	300	6	55200	**199 145 130**	19.546	**199 145 150**	

d (mm)	Actuator unit type	d2 (mm)	D (mm)	D1 min. (mm)	D1 max. (mm)	H (mm)	H1 (mm)	H2 (mm)	H3 (mm)	L (mm)	L1 (mm)	L2 (mm)	Q1 (mm)	Q2 (mm)
63	EA-45	104	19	120	125	415	77	134	188	45	122	180	40	
75	EA-45	115	19	140	145	428	83	140	188	46	122	180	54	35
90	EA-120	131	19	150	160	428	89	146	188	49	122	180	67	50
110	EA-120	161	19	175	191	460	104	167	188	56	122	180	88	74
140	EA-120	187	23	210	216	487	117	181	188	64	122	180	113	97
160	EA-120	215	24	241	241	508	130	189	188	72	122	180	139	123
225	EA-250	267	23	290	295	575	158	210	208	73	122	180	178	169
280	EA-250	329	25	353	362	677	205	264	208	113	122	180	210	207
315	EA-250	329	25	353	362	677	205	264	208	113	122	180	210	207

Butterfly valves type 240



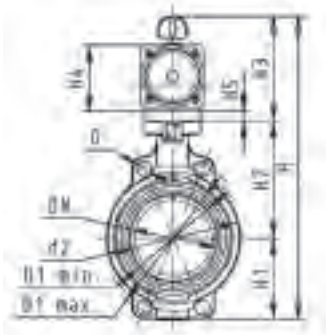

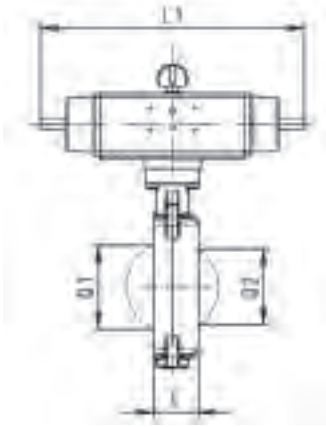

Butterfly valve type 240 PVC-U
FC (Fail safe to close)
Without manual override

Model:

- Control range 90°<)
- Overall length according to EN 558, ISO 5752
- Connecting dimension: ISO 7005 PN 10, EN 1092 PN 10, DIN 2501 PN 10, ANSI/ASME B 16.5 Class 150, BS 1560: 1989, BS 4504, JIS B 2220

d (mm)	Size (inch)	DN (mm)	PN (bar)	kv-value (Δp=1 bar) (l/min)	EPDM Code	Weight (kg)	FPM Code	Weight (kg)
63	2	50	10	1470	**199 240 002**	2.976	**199 240 022**	3.222
75	2 ½	65	10	2200	**199 240 003**	3.086	**199 240 023**	3.075
90	3	80	10	3000	**199 240 004**	3.486	**199 240 024**	3.938
110	4	100	10	6500	**199 240 005**	5.224	**199 240 025**	5.263
140	5	125	10	11500	**199 240 006**	7.127	**199 240 026**	6.884
160	6	150	10	16600	**199 240 007**	10.047	**199 240 027**	10.095
225	8	200	10	39600	**199 240 008**	14.925	**199 240 028**	14.134
280	10	250	10	55200	**199 240 009**	28.200	**199 240 029**	28.000
315	12	300	10	80000	**199 240 010**	36.200	**199 240 030**	36.400

d (mm)	Actuator unit type	d2 (mm)	D (mm)	D1 min. (mm)	D1 max. (mm)	H (mm)	H1 (mm)	H2 (mm)	H3 (mm)	H4 (mm)	H5 (mm)	L (mm)	L1 (mm)
63	PA-30 FC	104	19	120	125	327	77	134	117	70	15	45	276
75	PA-30 FC	115	19	140	145	340	83	140	117	70	15	46	276
90	PA-35 FC	131	19	150	160	361	89	146	126	78	15	49	326
110	PA-40 FC	161	19	175	191	400	104	167	129	86		56	370
140	PA-45 FC	187	23	210	216	436	117	181	139	96		64	411
160	PA-50 FC	215	24	241	241	468	130	189	149	106		72	423
225	PA-55 FC	267	23	290	295	529	158	210	161	118		73	452
280	PA-65 FC	329	25	353	362	808	205	264	191	148		113	648
315	PA-70 FC	379	25	400	432	866	228	285	196	157		113	663

d (mm)	L2 (mm)	Q1 (mm)	Q2 (mm)
63	65	40	
75	65	54	35
90	72	67	50
110	80	88	74
140	90	113	97
160	100	139	123
225	112	178	169
280	137	210	207
315	145	256	253



Butterfly valve type 240 PVC-U
FO (Fail safe to open)
Without manual override

Model:

- Control range 90°<)
- Overall length according to EN 558, ISO 5752
- Connecting dimension: ISO 7005 PN 10, EN 1092 PN 10, DIN 2501 PN 10, ANSI/ASME B 16.5 Class 150, BS 1560: 1989, BS 4504, JIS B 2220

d (mm)	Size (inch)	DN (mm)	PN (bar)	kv-value (Δp=1 bar) (l/min)	EPDM Code	Weight (kg)	FPM Code	Weight (kg)
63	2	50	10	1470	**199 240 042**	3.218	**199 240 062**	3.222
75	2 ½	65	10	2200	**199 240 043**	3.321	**199 240 063**	3.326
90	3	80	10	3000	**199 240 044**	3.920	**199 240 064**	3.493
110	4	100	10	6500	**199 240 045**	5.219	**199 240 065**	5.266
140	5	125	10	11500	**199 240 046**	6.866	**199 240 066**	6.884
160	6	150	10	16600	**199 240 047**	10.192	**199 240 067**	10.215
225	8	200	10	39600	**199 240 048**	14.106	**199 240 068**	16.496
280	10	250	10	55200	**199 240 049**	31.800	**199 240 069**	31.600
315	12	300	10	80000	**199 240 050**	36.200	**199 240 070**	25.000

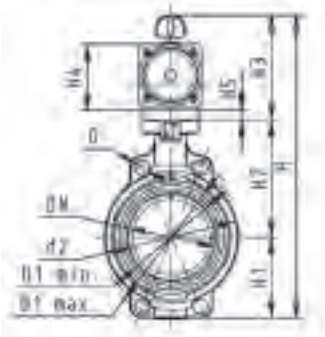

d (mm)	Actuator unit type	d2 (mm)	D (mm)	D1 min. (mm)	D1 max. (mm)	H (mm)	H1 (mm)	H2 (mm)	H3 (mm)	H4 (mm)	H5 (mm)	L (mm)	L1 (mm)
63	PA-30 FO	104	19	120	125	327	77	134	117	70	15	45	276
75	PA-30 FO	115	19	140	145	340	83	140	117	70	15	46	276
90	PA-35 FO	131	19	150	160	361	89	146	126	78	15	49	326
110	PA-40 FO	161	19	175	191	400	104	167	129	86		56	370
140	PA-45 FO	187	23	210	216	436	117	181	139	96		64	411
160	PA-50 FO	215	24	241	241	468	130	189	149	106		72	423
225	PA-55 FO	267	23	290	295	529	158	210	161	118		73	452
280	PA-70 FO	329	25	353	362	808	205	264	191	148		113	648
315	PA-70 FO	379	25	400	432	866	228	285	196	157		113	663

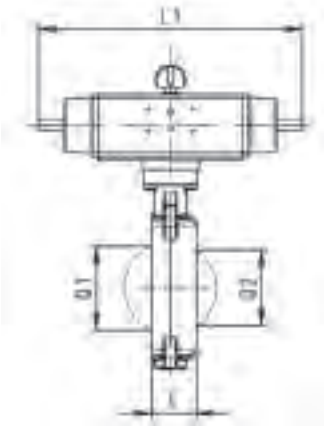

d (mm)	L2 (mm)	Q1 (mm)	Q2 (mm)
63	65	40	
75	65	54	35
90	72	67	50
110	80	88	74
140	90	113	97
160	100	139	123
225	112	178	169
280	137	210	207
315	145	256	253



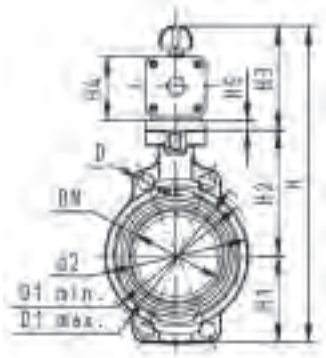

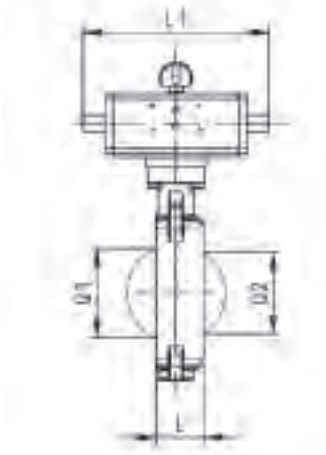

Butterfly valve type 240 PVC-U
DA (Double acting)
Without manual override

Model:

- Control range 90°<)
- Up to DN 300: Overall length according to EN558 (DN 50-200: line 25, DN250, 300 line 16), ISO 5752
- Connecting dimension: ISO 7005 PN 10, EN 1092 PN 10, DIN 2501 PN 10, ANSI/ASME B 16.5 Class 150, BS 1560: 1989, BS 4504, JIS B 2220
- For DN350-DN400 pneumatic actuator supplied by Revac

d (mm)	Size (inch)	DN (mm)	PN (bar)	kv-value (Δp=1 bar) (l/min)	EPDM Code	Weight (kg)	FPM Code	Weight (kg)
63	2	50	10	1470	**199 240 082**	2.936	**199 240 102**	2.072
75	2 ½	65	10	2200	**199 240 083**	2.402	**199 240 103**	2.176
90	3	80	10	3000	**199 240 084**	3.330	**199 240 104**	2.824
110	4	100	10	6500	**199 240 085**	3.765	**199 240 105**	3.563
140	5	125	10	11500	**199 240 086**	4.341	**199 240 106**	4.384
160	6	150	10	16600	**199 240 087**	7.042	**199 240 107**	6.694
225	8	200	10	39600	**199 240 088**	8.907	**199 240 108**	8.134
280	10	250	10	55200	**199 240 089**	18.948	**199 240 109**	19.100
315	12	300	10	80000	**199 240 090**	26.800	**199 240 110**	27.000
355	14	350	6	90000	**199 240 091**	40.600	**199 240 111**	70.000
400	16	400	6	115000	**199 240 092**	62.100	**199 240 112**	62.100

d (mm)	Actuator unit type	d2 (mm)	D (mm)	D1 min. (mm)	D1 max. (mm)	H (mm)	H1 (mm)	H2 (mm)	H3 (mm)	H4 (mm)	H5 (mm)	L (mm)	L1 (mm)
63	PA-35 DA	104	19	120	125	317	77	134	107	60	15	45	177
75	PA-35 DA	115	19	140	145	330	83	140	107	60	15	46	177
90	PA-40 DA	131	19	150	160	348	89	146	113	66	15	49	190
110	PA-45 DA	161	19	175	191	372	104	167	102	71		56	235
140	PA-45 DA	187	23	210	216	408	117	181	111	78		64	235
160	PA-55 DA	215	24	241	241	448	130	189	129	86		72	279
225	PA-55 DA	267	23	290	295	507	158	210	139	96		73	279
280	PA-65 DA	329	25	353	362	748	205	264	161	118		113	350
315	PA-70 DA	379	25	400	432	816	228	285	173	130		113	381
355	AP 5	535	29	445	577	863	268	410	185	155		129	360
400	AP 5.5	593	29	510	540	941	300	435	206	176		169	380

d (mm)	Q1 (mm)	Q2 (mm)
63	40	
75	54	35
90	67	50
110	88	74
140	113	97
160	139	123
225	178	169
280	210	207
315	256	253
355	325	305
400	353	350

Lugstyle butterfly valve type 578



Lugstyle butterfly valve type 578 PVC-U
Hand lever with ratchet settings

Model:

- Housing material: PP-GF30 with SS316 lug-inserts
- Overall length according to EN 558, ISO 5752 (DN50 - 200 line 25, DN250 - 300 line 10)
- Connecting dimension: ISO 7005 PN10, EN 1092 PN10, DIN 2501 PN10
- We recommend for the dimensions DN250 and DN300 only 6 bar maximum system pressure for the hand lever version

Option:

- Optional accessory: Valve-Integrated position feedback with limit switches (limit switches have to be ordered separately)

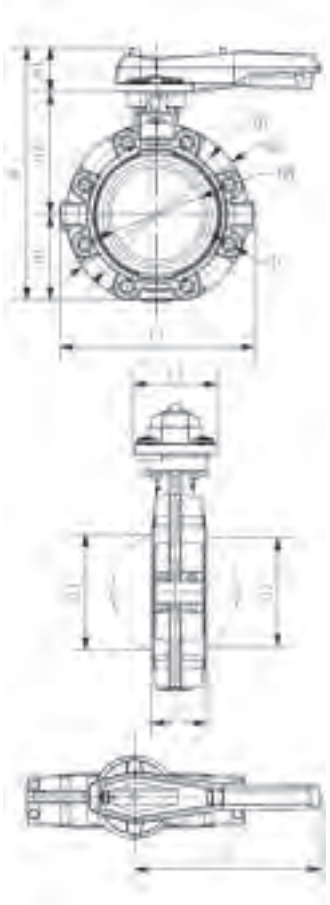

d (mm)	Size (inch)	DN (mm)	PN (bar)	kv-value (Δp=1 bar) (l/min)	EPDM Code	Weight (kg)	FPM Code	Weight (kg)
63	2	50	10	1470	**161 578 002**	1.800	**161 578 022**	1.800
75	2 ½	65	10	2200	**161 578 003**	1.895	**161 578 023**	1.895
90	3	80	10	3000	**161 578 004**	2.251	**161 578 024**	2.251
110	4	100	10	6500	**161 578 005**	3.146	**161 578 025**	3.146
140	5	125	10	11500	**161 578 006**	4.660	**161 578 026**	4.660
160	6	150	10	16600	**161 578 007**	6.430	**161 578 027**	6.430
225	8	200	10	39600	**161 578 008**	8.625	**161 578 028**	8.625
280	10	250	10	55200	**161 578 009**	19.528	**161 578 029**	19.528
315	12	300	10	80000	**161 578 010**	26.106	**161 578 030**	26.106

d (mm)	d2 (mm)	D	D1 (mm)	H (mm)	H1 (mm)	H2 (mm)	H3 (mm)	L (mm)	L1 (mm)	L2 (mm)	L3 (mm)	Q1 (mm)	Q2 (mm)
63	160	M16	125	265	77	134	54	45	106	205	165	40	
75	180	M16	145	277	83	140	54	46	106	205	182	54	35
90	195	M16	160	289	89	146	54	49	106	205	210	67	50
110	226	M16	180	328	106	167	55	56	106	255	240	88	74
140	258	M16	210	357	121	181	55	64	106	255	272	113	97
160	284	M20	240	377	133	189	55	72	106	255	300	139	123
225	341	M20	295	436	159	210	67	73	140	408	360	178	169
280	412	M20	350	536	205	264	67	113	140	408	440	210	207
315	482	M20	400	586	234	285	67	113	140	408	510	256	253



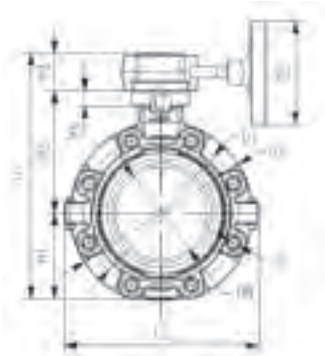



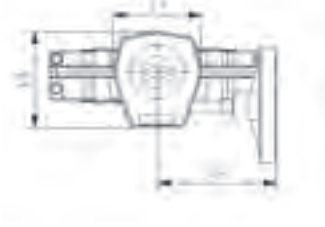

Lugstyle butterfly valve type 578 PVC-U
Reduction gear with handwheel

Model:

- Housing material: PP-GF30 with SS316 lug-inserts
- Overall length according to EN 558, ISO 5752 (DN50 - 200 line 25, DN250 - 300 line 10)
- Connecting dimension: ISO 7005 PN10, EN 1092 PN10, DIN 2501 PN10

Option:

- Optional accessory: Valve-Integrated position feedback with limit switches (limit switches have to be ordered separately)

d (mm)	Size (inch)	DN (mm)	PN (bar)	kv-value (Δp=1 bar) (l/min)	EPDM Code	Weight (kg)	FPM Code	Weight (kg)
63	2	50	10	1470	**161 578 042**	3.522	**161 578 062**	3.522
75	2 ½	65	10	2200	**161 578 043**	3.672	**161 578 063**	3.672
90	3	80	10	3000	**161 578 044**	3.929	**161 578 064**	3.929
110	4	100	10	6500	**161 578 045**	4.834	**161 578 065**	4.834
140	5	125	10	11500	**161 578 046**	6.348	**161 578 066**	6.348
160	6	150	10	16600	**161 578 047**	8.109	**161 578 067**	8.109
225	8	200	10	39600	**161 578 048**	9.353	**161 578 068**	9.353
280	10	250	10	55200	**161 578 049**	21.210	**161 578 069**	21.210
315	12	300	10	80000	**161 578 050**	27.746	**161 578 070**	27.746

d (mm)	d2 (mm)	D	D1 (mm)	D3 (mm)	H (mm)	H1 (mm)	H2 (mm)	H3 (mm)	L (mm)	L1 (mm)	L2 (mm)	L3 (mm)	L4 (mm)	Q1 (mm)	Q2 (mm)
63	160	M16	125	160	261	77	134	59	45	80	114	165	155	40	
75	180	M16	145	150	273	83	140	59	46	80	114	182	155	54	35
90	195	M16	160	150	285	89	146	59	49	80	114	210	155	67	50
110	226	M16	180	150	323	106	167	59	56	80	114	240	155	88	74
140	258	M16	210	150	352	121	181	59	64	80	114	272	155	113	97
160	284	M20	240	160	372	133	189	59	72	80	114	300	155	139	123
225	341	M20	295	160	419	159	210	59	73	80	114	360	155	178	169
280	412	M20	350	200	524	205	264	67	113	100	131	440	170	210	207
315	482	M20	400	200	574	234	285	67	113	100	131	510	170	256	253



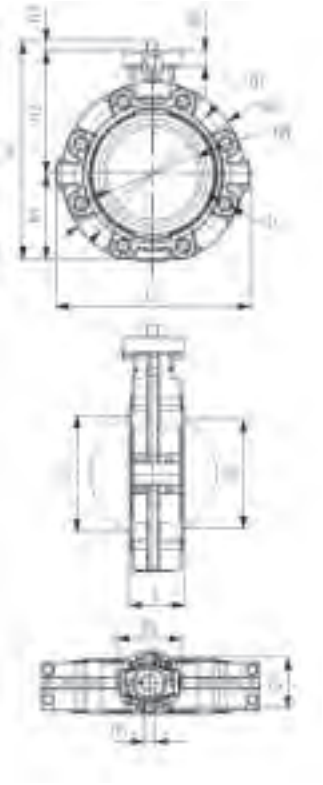

Lugstyle butterfly valve type 578 PVC-U
Bare shaft

Model:

- Housing material: PP-GF30 with SS316 lug-inserts
- Overall length according to EN 558, ISO 5752
- Connecting dimension: ISO 7005 PN10, EN 1092 PN10, DIN 2501 PN10
- Interface F07 according to DIN/ISO 5211
- Interface F10 for the dimensions DN250-300 according to DIN/ISO 5211

Option:

- Optional accessory: Valve-Integrated position feedback with limit switches (limit switches have to be ordered separately)

d (mm)	Size (inch)	DN (mm)	PN (bar)	kv-value (Δp=1 bar) (l/min)	EPDM Code	Weight (kg)	FPM Code	Weight (kg)
63	2	50	10	1470	**161 578 802**	1.299	**161 578 822**	1.299
75	2 ½	65	10	2200	**161 578 803**	1.456	**161 578 823**	1.456
90	3	80	10	3000	**161 578 804**	1.701	**161 578 824**	1.701
110	4	100	10	6500	**161 578 805**	2.606	**161 578 825**	2.606
140	5	125	10	11500	**161 578 806**	4.120	**161 578 826**	4.120
160	6	150	10	16600	**161 578 807**	5.881	**161 578 827**	5.881
225	8	200	10	39600	**161 578 808**	7.125	**161 578 828**	7.125
280	10	250	10	55200	**161 578 809**	17.880	**161 578 829**	17.880
315	12	300	10	80000	**161 578 810**	24.416	**161 578 830**	24.416

d (mm)	d2 (mm)	D	D1 (mm)	D3 (mm)	D4 (mm)	H (mm)	H1 (mm)	H2 (mm)	H3 (mm)	H4 (mm)	L (mm)	Q1 (mm)	Q2 (mm)
63	160	M16	125	70	90	238	77	134	27	23	45	40	
75	180	M16	145	70	90	250	83	140	27	23	46	54	35
90	195	M16	160	70	90	262	89	146	27	23	49	67	50
110	226	M16	180	70	90	289	106	167	16	23	56	88	74
140	258	M16	210	70	90	318	121	181	16	23	64	113	97
160	284	M20	240	70	90	341	133	189	19	23	72	139	123
225	341	M20	295	70	90	388	159	210	19	23	73	178	169
280	412	M20	350	102	125	509	205	264	40	23	113	210	207
315	482	M20	400	102	125	559	234	285	40	23	113	256	253

Lugstyle butterfly valves electric type 146



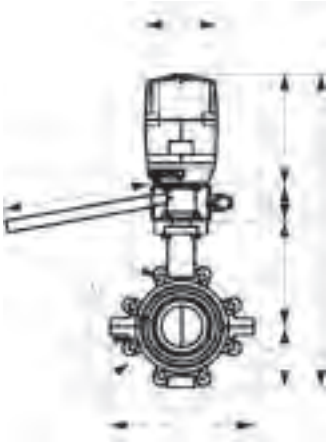

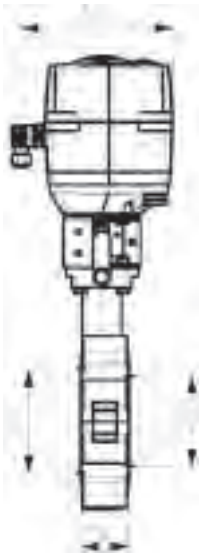

Lugstyle butterfly valve type 146 PVC-U 100-230V
With manual override

Model:

- Voltage 100-230 V, 50-60 Hz
- Factory set control range 90°<)
- Heating element, position feedback (Open/Close/ Middle)
- Overall length according to EN 558, ISO 5752 (DN50-200 line 25, DN250-300 line 16)
- Connecting dimension: ISO 7005 PN10, EN 1092 PN10, DIN 2501 PN10

Option:

- Other valve and actuator configurations available
- Optional accessories: Fail-safe return unit, Monitoring board, Position controller, Profibus DP board

d (mm)	Size (inch)	DN (mm)	PN (bar)	kv-value (Δp=1 bar) (l/min)	EPDM Code	Weight (kg)
63	2	50	10	1470	**199 146 002**	5.799
75	2 ½	65	10	2200	**199 146 003**	5.956
90	3	80	10	3000	**199 146 004**	6.201
110	4	100	10	6500	**199 146 005**	7.106
140	5	125	10	11500	**199 146 006**	8.620
160	6	150	10	16600	**199 146 007**	10.381
225	8	200	10	39600	**199 146 008**	15.125

d (mm)	Actuator unit type	d2 (mm)	D	D1 (mm)	H (mm)	H1 (mm)	H2 (mm)	H3 (mm)	H4 (mm)	L (mm)	L1 (mm)	L2 (mm)	L3 (mm)	Q1 (mm)	Q2 (mm)
63	EA-45	160	M16	125	474	77	134	188	75	45	122	180	165	40	
75	EA-45	180	M16	145	486	83	140	188	75	46	122	180	182	54	35
90	EA-120	195	M16	160	483	89	146	188	60	49	122	180	210	67	50
110	EA-120	226	M16	180	521	106	167	188	60	56	122	180	240	88	74
140	EA-120	258	M16	210	550	121	181	188	60	64	122	180	272	113	97
160	EA-120	284	M20	240	570	133	189	188	60	72	122	180	300	139	123
225	EA-250	341	M20	295	637	159	210	208	60	73	122	180	360	178	169



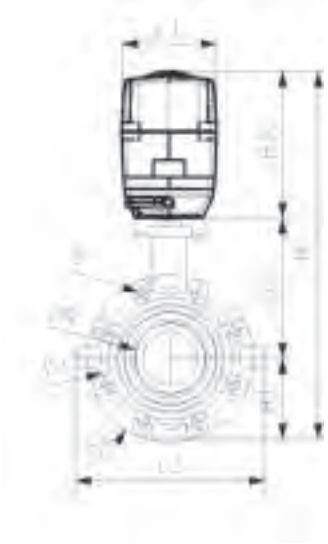



Lugstyle butterfly valve type 146 PVC-U 100-230V
Without manual override

Model:

- Voltage 100-230 V, 50-60 Hz
- Factory set control range 90°<)
- Heating element, position feedback (Open/Close/ Middle)
- Overall length according to EN 558, ISO 5752 (DN50-200 line 25, DN250-300 line 16)
- Connecting dimension: ISO 7005 PN10, EN 1092 PN10, DIN 2501 PN10

Option:

- Other valve and actuator configurations available
- Optional accessories: Fail-safe return unit, Monitoring board, Position controller, Profibus DP board

d (mm)	Size (inch)	DN (mm)	PN (bar)	kv-value (Δp=1 bar) (l/min)	EPDM Code	Weight (kg)
63	2	50	10	1470	**199 146 042**	4.299
75	2 ½	65	10	2200	**199 146 043**	4.456
90	3	80	10	3000	**199 146 044**	4.456
110	4	100	10	6500	**199 146 045**	5.606
140	5	125	10	11500	**199 146 046**	7.120
160	6	150	10	16600	**199 146 047**	8.881
225	8	200	10	39600	**199 146 048**	13.625
280	10	250	6	55200	**199 146 049**	24.385
315	12	300	4	80000	**199 146 050**	30.916

d (mm)	Actuator unit type	d2 (mm)	D	D1 (mm)	H (mm)	H1 (mm)	H2 (mm)	H3 (mm)	L (mm)	L1 (mm)	L2 (mm)	L3 (mm)	Q1 (mm)	Q2 (mm)
63	EA-45	160	M16	125	414	77	134	188	45	122	180	165	40	
75	EA-45	180	M16	145	426	83	140	188	46	122	180	182	54	35
90	EA-120	195	M16	160	423	89	146	188	49	122	180	210	67	50
110	EA-120	226	M16	180	461	106	167	188	56	122	180	240	88	74
140	EA-120	258	M16	210	490	121	181	188	64	122	180	272	113	97
160	EA-120	284	M20	240	510	133	189	188	72	122	180	300	139	123
225	EA-250	341	M20	295	577	159	210	208	73	122	180	360	178	169
280	EA-250	412	M20	350	677	205	264	208	113	122	180	440	210	207
315	EA-250	482	M20	400	727	234	285	208	113	122	180	510	256	253



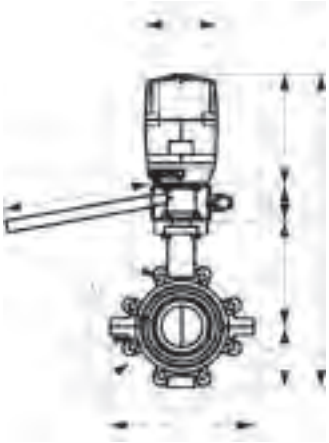

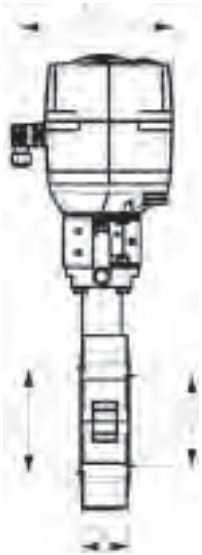

Lugstyle butterfly valve type 146 PVC-U 24V
With manual override

Model:

- Voltage 24 V AC/DC
- Factory set control range 90°<)
- Heating element, position feedback (Open/Close/ Middle)
- Overall length according to EN 558, ISO 5752 (DN50-200 line 25, DN250-300 line 16)
- Connecting dimension: ISO 7005 PN10, EN 1092 PN10, DIN 2501 PN10

Option:

- Other valve and actuator configurations available
- Optional accessories: Fail-safe return unit, Monitoring board, Position controller, Profibus DP board

d (mm)	Size (inch)	DN (mm)	PN (bar)	kv-value (Δp=1 bar) (l/min)	EPDM Code	Weight (kg)
63	2	50	10	1470	**199 146 082**	5.799
75	2 ½	65	10	2200	**199 146 083**	5.956
90	3	80	10	3000	**199 146 084**	6.201
110	4	100	10	6500	**199 146 085**	7.106
140	5	125	10	11500	**199 146 086**	8.620
160	6	150	10	16600	**199 146 087**	10.381
225	8	200	10	39600	**199 146 088**	15.125

d (mm)	Actuator unit type	d2 (mm)	D	D1 (mm)	H (mm)	H1 (mm)	H2 (mm)	H3 (mm)	H4 (mm)	L (mm)	L1 (mm)	L2 (mm)	L3 (mm)	Q1 (mm)	Q2 (mm)
63	EA-45	160	M16	125	459	77	134	188	60	45	122	180	165	40	
75	EA-45	180	M16	145	471	83	140	188	60	46	122	180	182	54	35
90	EA-120	195	M16	160	483	89	146	188	60	49	122	180	210	67	50
110	EA-120	226	M16	180	521	106	167	188	60	56	122	180	240	88	74
140	EA-120	258	M16	210	550	121	181	188	60	64	122	180	272	113	97
160	EA-120	284	M20	240	570	133	189	188	60	72	122	180	300	139	123
225	EA-250	341	M20	295	637	159	210	208	60	73	122	180	360	178	169



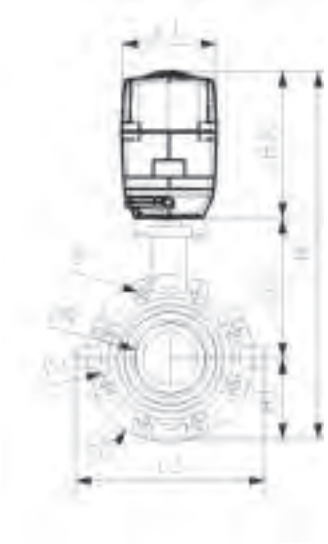



Lugstyle butterfly valve type 146 PVC-U 24V
Without manual override

Model:

- Voltage 24 V AC/DC
- Factory set control range 90°<)
- Heating element, position feedback (Open/Close/ Middle)
- Overall length according to EN 558, ISO 5752 (DN50-200 line 25, DN250-300 line 16)
- Connecting dimension: ISO 7005 PN10, EN 1092 PN10, DIN 2501 PN10

Option:

- Other valve and actuator configurations available
- Optional accessories: Fail-safe return unit, Monitoring board, Position controller, Profibus DP board

d (mm)	Size (inch)	DN (mm)	PN (bar)	kv-value (Δp=1 bar) (l/min)	EPDM Code	Weight (kg)
63	2	50	10	1470	**199 146 122**	4.299
75	2 ½	65	10	2200	**199 146 123**	4.456
90	3	80	10	3000	**199 146 124**	4.701
110	4	100	10	6500	**199 146 125**	5.606
140	5	125	10	11500	**199 146 126**	7.120
160	6	150	10	16600	**199 146 127**	8.881
225	8	200	10	39600	**199 146 128**	13.625

d (mm)	Actuator unit type	d2 (mm)	D	D1 (mm)	H (mm)	H1 (mm)	H2 (mm)	H3 (mm)	L (mm)	L1 (mm)	L2 (mm)	L3 (mm)	Q1 (mm)	Q2 (mm)
63	EA-45	160	M16	125	414	77	134	188	45	122	180	165	40	
75	EA-45	180	M16	145	426	83	140	188	46	122	180	182	54	35
90	EA-120	195	M16	160	423	89	146	188	49	122	180	210	67	50
110	EA-120	226	M16	180	461	106	167	188	56	122	180	240	88	74
140	EA-120	258	M16	210	490	121	181	188	64	122	180	272	113	97
160	EA-120	284	M20	240	410	133	189	188	72	122	180	300	139	123
225	EA-250	341	M20	295	577	159	210	208	73	122	180	360	178	169

Lugstyle butterfly valves type 243



Lugstyle butterfly valve type 243 PVC-U
FC (Fail safe to close)
Without manual override

Model:

- Housing material: PP-GF30 with SS316 lug-inserts
- Control range 90°<)
- Overall length according to EN 558, ISO 5752 (DN50 - 200 line 25, DN250 - 300 line 10)
- Connecting dimension: ISO 7005 PN10, EN 1092 PN10, DIN 2501 PN10

Option:

- Optional accessory: Valve-Integrated position feedback with limit switches (limit switches have to be ordered separately)

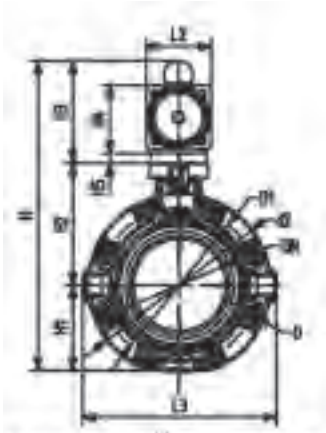

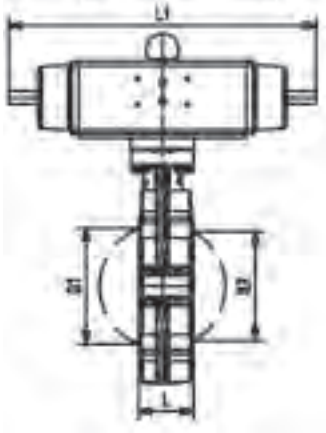

d (mm)	Size (inch)	DN (mm)	PN (bar)	kv-value (Δp=1 bar) (l/min)	EPDM Code	Weight (kg)	FPM Code	Weight (kg)
63	2	50	10	1470	**199 243 002**	3.499	**199 243 022**	3.499
75	2 ½	65	10	2200	**199 243 003**	3.656	**199 243 023**	3.656
90	3	80	10	3000	**199 243 004**	4.692	**199 243 024**	4.692
110	4	100	10	6500	**199 243 005**	6.406	**199 243 025**	6.406
140	5	125	10	11500	**199 243 006**	9.222	**199 243 026**	9.222
160	6	150	10	16600	**199 243 007**	12.902	**199 243 027**	12.902
225	8	200	10	39600	**199 243 008**	16.691	**199 243 028**	16.691
280	10	250	10	55200	**199 243 009**	33.880	**199 243 029**	33.880
315	12	300	10	80000	**199 243 010**	43.985	**199 243 030**	43.985

d (mm)	Actuator unit type	d2 (mm)	D	D1 (mm)	H (mm)	H1 (mm)	H2 (mm)	H3 (mm)	H4 (mm)	H5 (mm)	L (mm)	L1 (mm)	L2 (mm)	L3 (mm)
63	PA-30 FC	160	M16	125	328	77	134	117	70	15	45	276	65	165
75	PA-30 FC	180	M16	145	340	83	140	117	70	15	46	276	65	182
90	PA-35 FC	195	M16	160	361	89	146	126	78	15	49	326	72	210
110	PA-40 FC	226	M16	180	402	106	167	129	86		56	370	80	240
140	PA-45 FC	258	M16	210	441	121	181	139	96		64	411	90	272
160	PA-50 FC	284	M20	240	471	133	189	149	106		72	423	100	300
225	PA-55 FC	341	M20	295	530	159	210	161	118		73	452	112	360
280	PA-65 FC	412	M20	350	660	205	164	191	148		113	648	137	440
315	PA-70 FC	482	M20	400	715	234	285	196	157		113	663	145	510

d (mm)	Q1 (mm)	Q2 (mm)
63	40	
75	54	35
90	67	50
110	88	74
140	113	97
160	139	123
225	178	169
280	210	207
315	256	253



Lugstyle butterfly valve type 243 PVC-U
FO (Fail safe to open)
Without manual override

Model:

- Housing material: PP-GF30 with SS316 lug-inserts
- Control range 90°<)
- Overall length according to EN 558, ISO 5752 (DN50 - 200 line 25, DN250 - 300 line 10)
- Connecting dimension: ISO 7005 PN10, EN 1092 PN10, DIN 2501 PN10

Option:

- Optional accessory: Valve-Integrated position feedback with limit switches (limit switches have to be ordered separately)

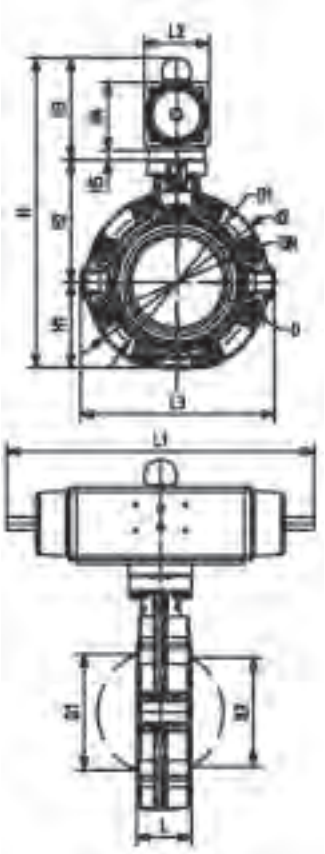

d (mm)	Size (inch)	DN (mm)	PN (bar)	kv-value (Δp=1 bar) (l/min)	EPDM Code	Weight (kg)	FPM Code	Weight (kg)
63	2	50	10	1470	**199 243 042**	3.499	**199 243 062**	3.499
75	2 ½	65	10	2200	**199 243 043**	3.656	**199 243 063**	3.656
90	3	80	10	3000	**199 243 044**	4.692	**199 243 064**	4.692
110	4	100	10	6500	**199 243 045**	6.406	**199 243 065**	6.406
140	5	125	10	11500	**199 243 046**	9.222	**199 243 066**	9.222
160	6	150	10	16600	**199 243 047**	12.902	**199 243 067**	12.902
225	8	200	10	39600	**199 243 048**	16.691	**199 243 068**	16.691
280	10	250	10	55200	**199 243 049**	33.880	**199 243 069**	33.880
315	12	300	10	80000	**199 243 050**	43.985	**199 243 070**	43.985

d (mm)	Actuator unit type	d2 (mm)	D	D1 (mm)	H (mm)	H1 (mm)	H2 (mm)	H3 (mm)	H4 (mm)	H5 (mm)	L (mm)	L1 (mm)	L2 (mm)	L3 (mm)
63	PA-30 FO	160	M16	125	328	77	134	117	70	15	45	276	65	165
75	PA-30 FO	180	M16	145	340	83	140	117	70	15	46	276	65	182
90	PA-35 FO	195	M16	160	361	89	146	126	78	15	49	326	72	210
110	PA-40 FO	226	M16	180	402	106	167	129	86		56	370	80	240
140	PA-45 FO	258	M16	210	441	121	181	139	96		64	411	90	272
160	PA-50 FO	284	M20	240	471	133	189	149	106		72	423	100	300
225	PA-55 FO	341	M20	295	530	159	210	161	118		73	452	112	360
280	PA-70 FO	412	M20	350	660	205	264	191	148		113	648	137	440
315	PA-70 FO	482	M20	400	715	234	285	196	157		113	663	145	510

d (mm)	Q1 (mm)	Q2 (mm)
63	40	
75	54	35
90	67	50
110	88	74
140	113	97
160	139	123
225	178	169
280	210	207
315	256	253



Lugstyle butterfly valve type 243 PVC-U
DA (Double acting)
Without manual override

Model:

- Housing material: PP-GF30 with SS316 lug-inserts
- Control range 90°<)
- Overall length according to EN 558, ISO 5752 (DN50 - 200 line 25, DN250 - 300 line 10)
- Connecting dimension: ISO 7005 PN10, EN 1092 PN10, DIN 2501 PN10

Option:

- Optional accessory: Valve-Integrated position feedback with limit switches (limit switches have to be ordered separately)

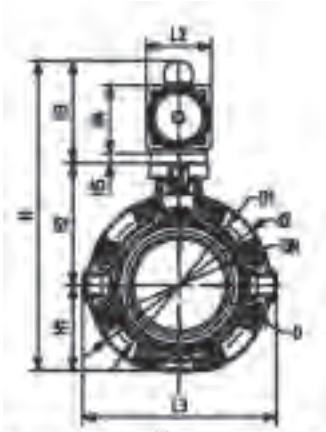

d (mm)	Size (inch)	DN (mm)	PN (bar)	kv-value (Δp=1 bar) (l/min)	EPDM Code	Weight (kg)	FPM Code	Weight (kg)
63	2	50	10	1470	**199 243 082**	3.499	**199 243 102**	3.499
75	2 ½	65	10	2200	**199 243 083**	3.656	**199 243 103**	3.656
90	3	80	10	3000	**199 243 084**	4.692	**199 243 104**	4.692
110	4	100	10	6500	**199 243 085**	6.406	**199 243 105**	6.406
140	5	125	10	11500	**199 243 086**	9.222	**199 243 106**	9.222
160	6	150	10	16600	**199 243 087**	12.902	**199 243 107**	12.902
225	8	200	10	39600	**199 243 088**	16.691	**199 243 108**	16.691
280	10	250	10	55200	**199 243 089**	33.880	**199 243 109**	33.880
315	12	300	10	80000	**199 243 090**	43.985	**199 243 110**	43.985

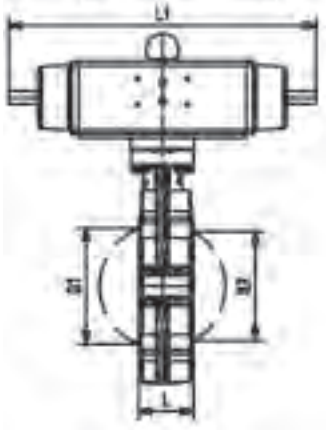

d (mm)	Actuator unit type	d2 (mm)	D	D1 (mm)	H (mm)	H1 (mm)	H2 (mm)	H3 (mm)	H4 (mm)	H5 (mm)	L (mm)	L1 (mm)	L2 (mm)	L3 (mm)
63	PA-35 DA	160	M16	125	318	77	134	107	60	15	45	177	55	165
75	PA-35 DA	180	M16	145	330	83	140	107	60	15	46	177	55	182
90	PA-40 DA	195	M16	160	348	89	146	113	66	15	49	190	60	210
110	PA-45 DA	226	M16	180	375	106	167	102	71		56	235	65	240
140	PA-45 DA	258	M16	210	413	121	181	111	78		64	235	72	272
160	PA-55 DA	284	M20	240	451	133	189	129	86		72	279	80	300
225	PA-55 DA	341	M20	295	508	159	210	139	96		73	279	90	360
280	PA-65 DA	412	M20	350	630	205	264	161	118		113	350	112	440
315	PA-70 DA	482	M20	400	692	234	285	173	130		113	381	124	510

d (mm)	Q1 (mm)	Q2 (mm)
63	40	
75	54	35
90	67	50
110	88	74
140	113	97
160	139	123
225	178	169
280	210	207
315	256	253

Pressure regulating valves

Pressure reducing valve type 582



Pressure reducing valve type 582 PVC-U
Unions with solvent cement sockets metric
With manometer

Model:

- Diaphragm PTFE/EPDM
- Integrated stainless steel mounting inserts
- 0.5-9.0 bar (7-130 psi)
- Attention: Manometer with brass connection in direct contact with medium. Check for chemical resistance, otherwise chose the optional manometer adapter for media separation.

0.3-3.0 bar (4-44 psi) on request

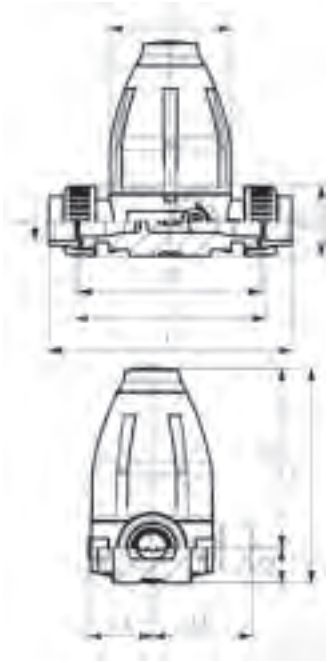

d (mm)	DN (mm)	PN (bar)	O-rings EPDM Code	Weight (kg)	O-rings FPM Code
16	10	10	**161 582 121**	0.724	**161 582 131**
20	15	10	**161 582 122**	0.730	**161 582 132**
25	20	10	**161 582 123**	1.520	**161 582 133**
32	25	10	**161 582 124**	1.550	**161 582 134**
40	32	10	**161 582 125**	4.100	**161 582 135**
50	40	10	**161 582 126**	4.270	**161 582 136**
63	50	10	**161 582 127**	4.500	**161 582 137**

d (mm)	D (mm)	D1 (mm)	H (mm)	H1 (mm)	H2 (mm)	H3 (mm)	L (mm)	L2 (mm)	L3 (mm)	L4 (mm)	L5 (mm)	M	z (mm)	closest inch (inch)
16	79	35	132	111	21	12	180	120	42	77	40	M6	172	⅜
20	79	43	132	111	21	12	158	120	42	77	40	M6	126	½
25	100	51	177	148	29	14	194	150	53	88	46	M6	156	¾
32	100	58	177	148	29	14	200	150	53	88	46	M6	156	1
40	147	72	251	207	44	21	263	205	76	111	65	M8	211	1 ¼
50	147	83	251	207	44	21	273	205	76	111	65	M8	211	1 ½
63	147	101	251	207	44	21	287	205	76	111	65	M8	211	2



Pressure reducing valve type 582 PVC-U
Unions with solvent cement sockets metric
Without manometer

Model:

- Diaphragm PTFE/EPDM
- Integrated stainless steel mounting inserts
- 0.5-9.0 bar (7-130 psi)

0.3-3.0 bar (4-44 psi) on request
Manometer on request

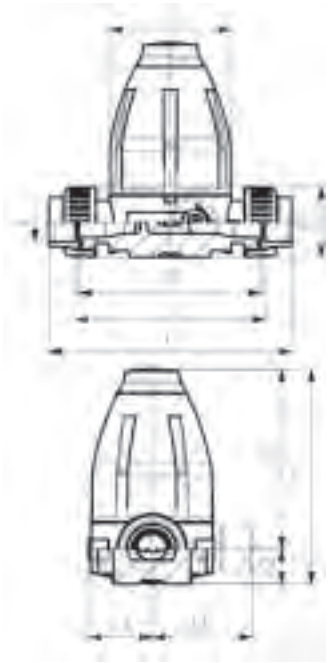

d (mm)	DN (mm)	PN (bar)	O-rings EPDM Code	Weight (kg)	O-rings FPM Code
16	10	10	**161 582 101**	0.694	**161 582 111**
20	15	10	**161 582 102**	0.700	**161 582 112**
25	20	10	**161 582 103**	1.490	**161 582 113**
32	25	10	**161 582 104**	1.520	**161 582 114**
40	32	10	**161 582 105**	4.070	**161 582 115**
50	40	10	**161 582 106**	4.240	**161 582 116**
63	50	10	**161 582 107**	4.470	**161 582 117**

d (mm)	D (mm)	D1 (mm)	H (mm)	H1 (mm)	H2 (mm)	H3 (mm)	L (mm)	L2 (mm)	L3 (mm)	L5 (mm)	M	z (mm)	closest inch (inch)
16	79	35	132	111	21	12	180	120	42	40	M6	172	⅜
20	79	43	132	111	21	12	158	120	42	40	M6	126	½
25	100	51	177	148	29	14	194	150	53	46	M6	156	¾
32	100	58	177	148	29	14	200	150	53	46	M6	156	1
40	147	72	251	207	44	21	263	205	76	65	M8	211	1 ¼
50	147	83	251	207	44	21	273	205	76	65	M8	211	1 ½
63	147	101	251	207	44	21	287	205	76	65	M8	211	2



Pressure reducing valve type 582 PVC-U
With solvent cement spigots metric
With manometer

Model:

- Diaphragm PTFE/EPDM
- Integrated stainless steel mounting inserts
- 0.5-9.0 bar (7-130 psi)
- Attention: Manometer with brass connection in direct contact with medium. Check for chemical resistance, otherwise chose the optional manometer adapter for media separation.

0.3-3.0 bar (4-44 psi) on request

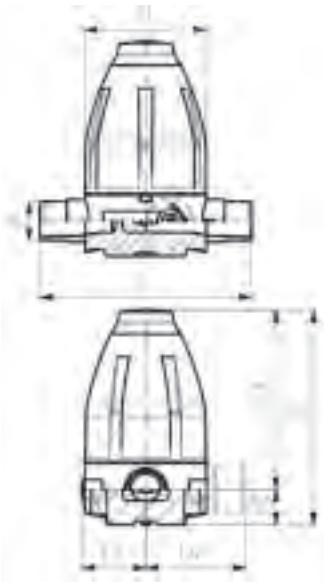

d (mm)	DN (mm)	PN (bar)	O-rings EPDM Code	Weight (kg)	O-rings FPM Code
16	10	10	**161 582 021**	0.650	**161 582 031**
20	15	10	**161 582 022**	0.660	**161 582 032**
25	20	10	**161 582 023**	1.430	**161 582 033**
32	25	10	**161 582 024**	1.440	**161 582 034**
40	32	10	**161 582 025**	3.960	**161 582 035**
50	40	10	**161 582 026**	3.970	**161 582 036**
63	50	10	**161 582 027**	4.040	**161 582 037**

d (mm)	D (mm)	H (mm)	H1 (mm)	H2 (mm)	H3 (mm)	L (mm)	L3 (mm)	L4 (mm)	L5 (mm)	M	closest inch (inch)
16	79	132	111	21	12	134	42	77	40	M6	⅜
20	79	132	111	21	12	134	42	77	40	M6	½
25	100	177	148	29	14	174	53	88	46	M6	¾
32	100	177	148	29	14	174	53	88	46	M6	1
40	147	251	207	44	21	224	76	111	65	M8	1 ¼
50	147	251	207	44	21	224	76	111	65	M8	1 ½
63	147	251	207	44	21	244	76	111	65	M8	2



Pressure reducing valve type 582 PVC-U
With solvent cement spigots metric
Without manometer

Model:

- Diaphragm PTFE/EPDM
- Integrated stainless steel mounting inserts
- 0.5-9.0 bar (7-130 psi)

0.3-3.0 bar (4-44 psi) on request
Manometer on request

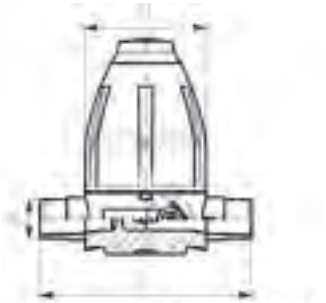

d (mm)	DN (mm)	PN (bar)	O-rings EPDM Code	Weight (kg)	O-rings FPM Code
16	10	10	**161 582 001**	0.620	**161 582 011**
20	15	10	**161 582 002**	0.630	**161 582 012**
25	20	10	**161 582 003**	1.400	**161 582 013**
32	25	10	**161 582 004**	1.410	**161 582 014**
40	32	10	**161 582 005**	3.930	**161 582 015**
50	40	10	**161 582 006**	3.940	**161 582 016**
63	50	10	**161 582 007**	4.010	**161 582 017**

d (mm)	D (mm)	H (mm)	H1 (mm)	H2 (mm)	H3 (mm)	L (mm)	L3 (mm)	L5 (mm)	M	closest inch (inch)
16	79	132	111	21	12	134	42	40	M6	⅜
20	79	132	111	21	12	134	42	40	M6	½
25	100	177	148	29	14	174	53	46	M6	¾

table continued on the next page

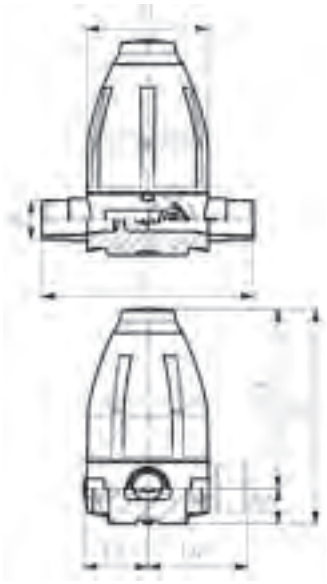

d (mm)	D (mm)	H (mm)	H1 (mm)	H2 (mm)	H3 (mm)	L (mm)	L3 (mm)	L5 (mm)	M	closest inch (inch)
32	100	177	148	29	14	174	53	46	M6	1
40	147	251	207	44	21	224	76	65	M8	1 ¼
50	147	251	207	44	21	224	76	65	M8	1 ½
63	147	251	207	44	21	244	76	65	M8	2





Pressure reducing valve type V82 PVC-U
With solvent cement spigots metric

Type	d (mm)	DN (mm)	EPDM Code	Weight (kg)	PTFE Code
V82	75	65	**199 041 019**	11.685	**199 041 029**
V82	90	80	**199 041 020**	19.630	**199 041 030**
V82	110	100	**199 041 021**	31.640	**199 041 031**

D (mm)	H (mm)	H1 (mm)	L (mm)	closest inch (inch)	Pressure range (bar)
200	350	250	300	2 ½	0.5 - 6.0
250	425	305	360	3	0.5 - 6.0
300	495	345	420	4	0.5 - 4.0

Pressure retaining valve type 586



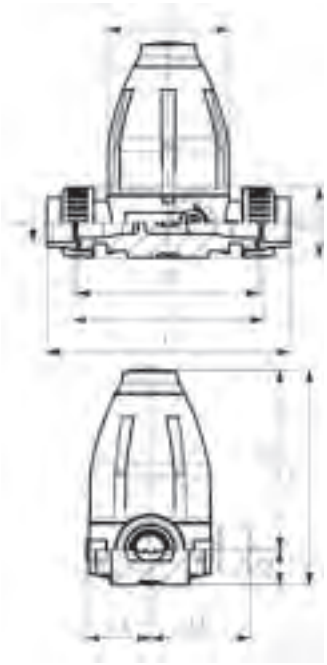

Pressure retaining valve type 586 PVC-U
Unions with solvent cement sockets metric
Without manometer

Model:

- Diaphragm PTFE/EPDM
- Integrated stainless steel mounting inserts
- 0.5-9.0 bar (7-130 psi)

0.3-3.0 bar (4-44 psi) on request
Manometer on request

d (mm)	DN (mm)	PN (bar)	O-rings EPDM Code	Weight (kg)	O-rings FPM Code
16	10	10	**161 586 101**	0.694	**161 586 111**
20	15	10	**161 586 102**	0.690	**161 586 112**
25	20	10	**161 586 103**	1.510	**161 586 113**
32	25	10	**161 586 104**	1.540	**161 586 114**
40	32	10	**161 586 105**	4.200	**161 586 115**
50	40	10	**161 586 106**	4.260	**161 586 116**
63	50	10	**161 586 107**	4.500	**161 586 117**

d (mm)	D (mm)	D1 (mm)	H (mm)	H1 (mm)	H2 (mm)	H3 (mm)	L (mm)	L2 (mm)	L3 (mm)	L5 (mm)	M	z (mm)	closest inch (inch)
16	79	35	132	111	21	12	154	120	42	40	M6	172	⅜
20	79	43	132	111	21	12	158	120	42	40	M6	126	½
25	100	51	177	148	29	14	194	150	53	46	M6	156	¾
32	100	58	177	148	29	14	200	150	53	46	M6	156	1
40	147	72	251	207	44	21	263	205	76	65	M8	211	1 ¼
50	147	83	251	207	44	21	273	205	76	65	M8	211	1 ½
63	147	101	251	207	44	21	287	205	76	65	M8	211	2



Pressure retaining valve type 586 PVC-U
With solvent cement spigots metric
Without manometer

Model:

- Diaphragm PTFE/EPDM
- Integrated stainless steel mounting inserts
- 0.5-9.0 bar (7-130 psi)

0.3-3.0 bar (4-44 psi) on request
Manometer on request

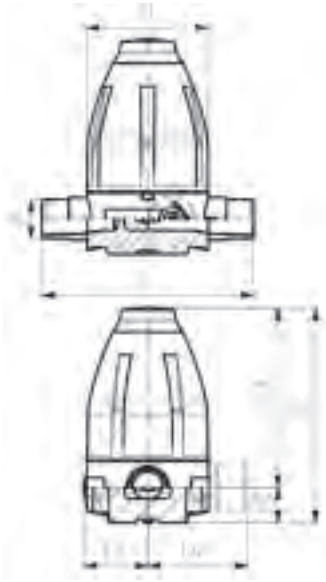

d (mm)	DN (mm)	PN (bar)	O-rings EPDM Code	Weight (kg)	O-rings FPM Code
16	10	10	**161 586 001**	0.620	**161 586 011**
20	15	10	**161 586 002**	0.620	**161 586 012**
25	20	10	**161 586 003**	1.420	**161 586 013**
32	25	10	**161 586 004**	1.430	**161 586 014**
40	32	10	**161 586 005**	3.960	**161 586 015**
50	40	10	**161 586 006**	3.960	**161 586 016**
63	50	10	**161 586 007**	4.040	**161 586 017**

d (mm)	D (mm)	H (mm)	H1 (mm)	H2 (mm)	H3 (mm)	L (mm)	L3 (mm)	L5 (mm)	M	closest inch (inch)
16	79	132	111	21	12	134	42	40	M6	⅜
20	79	132	111	21	12	134	42	40	M6	½
25	100	177	148	29	14	174	53	46	M6	¾
32	100	177	148	29	14	174	53	46	M6	1
40	147	251	207	44	21	224	76	65	M8	1 ¼
50	147	251	207	44	21	224	76	65	M8	1 ½
63	147	251	207	44	21	244	76	65	M8	2







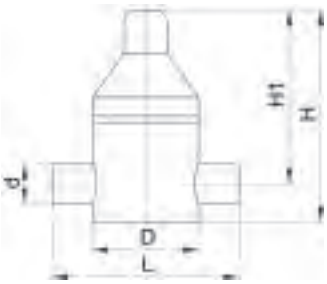

Pressure retaining valve type V86 PVC-U
With solvent cement spigots metric

Type	d (mm)	DN (mm)	EPDM Code	Weight (kg)	PTFE Code	Weight (kg)
V86	75	65	**199 041 950**	7.700	**199 041 990**	7.700
V86	90	80	**199 041 988**	17.700	**199 041 991**	17.700
V86	110	100	**199 041 953**	19.600	**199 041 945**	19.600

D (mm)	H (mm)	H1 (mm)	L (mm)	closest inch (inch)	Pressure range (bar)
180	275	230	284	2 ½	1.0 - 6.0
250	410	320	360	3	1.0 - 6.0
250	485	415	380	4	1.0 - 4.0

Process control valves





Ventilating and bleed valve
Type 591 PVC-U
With solvent cement sockets metric

Model:

- With protection cap up to DN50 made of PP-GF, DN65-100 made of POM
- Floater made of PP-H
- Designed for easy installation and removal
- Compact installation length

d (mm)	DN (mm)	PN (bar)	EPDM Code	FPM Code	D (mm)	L (mm)	t (mm)	closest inch (inch)
16	10	16	**161 591 001**	**161 591 011**	50	118	14	⅜
20	15	16	**161 591 002**	**161 591 012**	50	124	16	½
25	20	16	**161 591 003**	**161 591 013**	58	142	19	¾
32	25	16	**161 591 004**	**161 591 014**	68	157	22	1
40	32	16	**161 591 005**	**161 591 015**	84	179	26	1 ¼
50	40	16	**161 591 006**	**161 591 016**	97	197	31	1 ½
63	50	16	**161 591 007**	**161 591 017**	124	229	38	2
75	65	16	**161 591 008**	**161 591 018**	166	258	45	2 ½
90	80	16	**161 591 009**	**161 591 019**	200	277	52	3
110	100	16	**161 591 010**	**161 591 020**	238	320	64	4



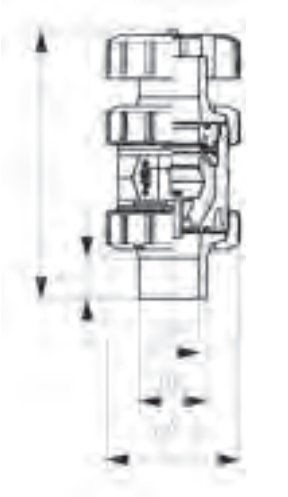

Ventilating and bleed valve
Type 591 PVC-U
With solvent cement spigots metric

Model:

- With protection cap up to DN50 made of PP-GF, DN65-100 made of POM
- Floater made of PP-H
- Designed for easy installation and removal
- Compact installation length

d (mm)	DN (mm)	PN (bar)	EPDM Code	FPM Code	D (mm)	L (mm)	t (mm)	closest inch (inch)
16	10	16	**161 591 041**	**161 591 051**	50	129	14	⅜
20	15	16	**161 591 042**	**161 591 052**	50	139	16	½
25	20	16	**161 591 043**	**161 591 053**	58	160	19	¾
32	25	16	**161 591 044**	**161 591 054**	68	172	22	1
40	32	16	**161 591 045**	**161 591 055**	84	193	26	1 ¼
50	40	16	**161 591 046**	**161 591 056**	97	215	31	1 ½
63	50	16	**161 591 047**	**161 591 057**	124	249	38	2
75	65	16	**161 591 048**	**161 591 058**	166	284	44	2 ½
90	80	16	**161 591 049**	**161 591 059**	200	300	52	3
110	100	16	**161 591 050**	**161 591 060**	238	340	61	4



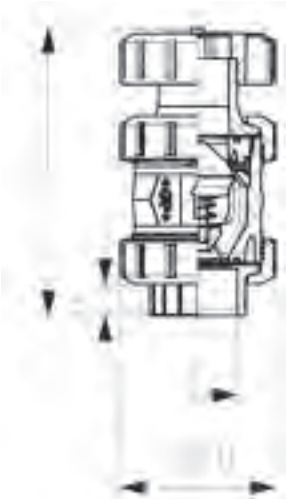

Ventilating valve type 595 PVC-U
With solvent cement sockets metric

Model:

- With protection cap up to DN50 made of PP-GF, DN65-100 made of POM
- Spring HALAR coated
- Spring available in other materials, see spare parts
- Designed for easy installation and removal
- Compact installation length

d (mm)	DN (mm)	PN (bar)	EPDM Code	FPM Code	D (mm)	L (mm)	t (mm)	closest inch (inch)
16	10	16	**161 595 001**	**161 595 011**	50	118	14	⅜
20	15	16	**161 595 002**	**161 595 012**	50	124	16	½
25	20	16	**161 595 003**	**161 595 013**	58	142	19	¾
32	25	16	**161 595 004**	**161 595 014**	68	157	22	1
40	32	16	**161 595 005**	**161 595 015**	84	179	26	1 ¼
50	40	16	**161 595 006**	**161 595 016**	97	197	31	1 ½
63	50	16	**161 595 007**	**161 595 017**	124	229	38	2
75	65	16	**161 595 008**	**161 595 018**	166	258	45	2 ½
90	80	16	**161 595 009**	**161 595 019**	200	277	52	3
110	100	16	**161 595 010**	**161 595 020**	238	320	64	4





Ventilating valve type 595 PVC-U
With solvent cement spigots metric

Model:

- With protection cap up to DN50 made of PP-GF, DN65-100 made of POM
- Spring HALAR coated
- Spring available in other materials, see spare parts
- Designed for easy installation and removal
- Compact installation length

d (mm)	DN (mm)	PN (bar)	EPDM Code	FPM Code	D (mm)	L (mm)	t (mm)	closest inch (inch)
16	10	16	**161 595 041**	**161 595 051**	50	129	14	⅜
20	15	16	**161 595 042**	**161 595 052**	50	139	16	½
25	20	16	**161 595 043**	**161 595 053**	58	160	19	¾
32	25	16	**161 595 044**	**161 595 054**	68	172	22	1
40	32	16	**161 595 045**	**161 595 055**	84	193	26	1 ¼
50	40	16	**161 595 046**	**161 595 056**	97	215	31	1 ½
63	50	16	**161 595 047**	**161 595 057**	124	249	38	2
75	65	16	**161 595 048**	**161 595 058**	166	284	44	2 ½
90	80	16	**161 595 049**	**161 595 059**	200	300	52	3
110	100	16	**161 595 050**	**161 595 060**	238	340	61	4



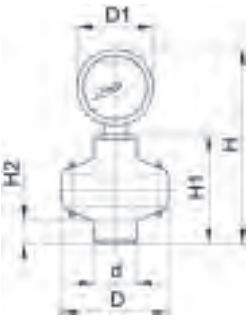

Gauge guard type Z700 PVC-U
With manometer

d (mm)	PTFE Code	Weight (kg)	D (mm)	D1 (mm)	H (mm)	H1 (mm)	H2 (mm)	closest inch (inch)	Pressure range (bar)	G_R (inch)
25	**199 041 000**	0.271	72	63	129	71	15	¾	0 - 10	¼
25	**199 041 292**	0.267	72	63	129	71	15	¾	0 - 6	¼
32	**199 041 001**	0.633	100	100	210	90	22	1	0 - 10	½
32	**199 041 293**	0.657	100	100	210	90	22	1	0 - 6	½





Gauge guard type Z701 PVC-U
Without manometer

d (mm)	PTFE Code	Weight (kg)	D (mm)	H1 (mm)	H2 (mm)	closest inch (inch)	G_R (inch)
25	**199 041 006**	0.144	72	71	15	¾	¼
32	**199 041 007**	0.261	100	90	22	1	½



Water jet suction pump type P20 PVC-U

- DN 10-20: BSP parallel female thread
- DN 25-50: Solvent cement socket metric
- DN 65-80: Solvent cement spigot metric

d (mm)	DN (mm)	PN (bar)	EPDM Code	Weight (kg)	H (mm)	H1 (mm)	L (mm)	L1 (mm)	L2 (mm)	closest inch (inch)	G1 (inch)	G (inch)
16	10	10	**199 041 120**	0.138		35		110	40	⅜	¾	R 3/4
20	15	10	**199 041 121**	0.228		35		125	40	½	¾	R 1
25	20	10	**199 041 122**	0.363		45		145	45	¾	¾	R 1 1/4
32	25	10	**199 041 123**	0.468	96	71	245	195		1	1 ½	R 1 1/2
40	32	10	**199 041 124**	0.841	116	87	297	239		1 ¼	2	R 2
50	40	10	**199 041 125**	1.360	139	105	369	301		1 ½	2 ¼	R 2 1/4
63	50	10	**199 041 126**	2.440	169	128	433	351		2	2 ¾	R 2 3/4
75	65	10	**199 041 127**	2.313		115	388			2 ½		
90	80	10	**199 041 128**	4.090		149	465			3		

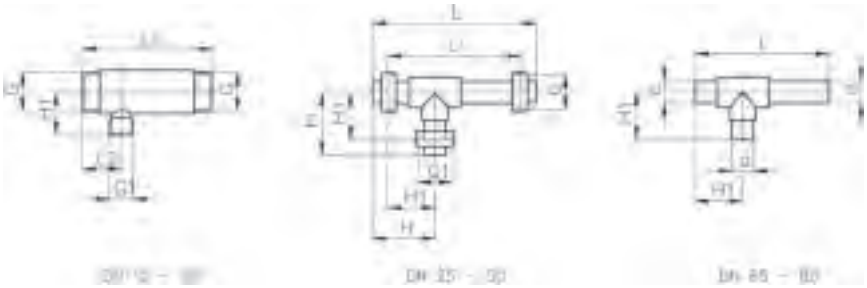





Throttle valve type V251 PVC-U
With solvent cement sockets metric

d (mm)	DN (mm)	PN (bar)	EPDM Code	Weight (kg)	FPM Code	Weight (kg)	D (mm)	H (mm)	H1 (mm)	L (mm)	closest inch (inch)
16	10	10	**199 041 203**	0.048	**199 041 210**	0.048	29	57	45	47	⅜
20	15	10	**199 041 204**	0.077	**199 041 211**	0.081	35	66	51	55	½
25	20	10	**199 041 205**	0.123	**199 041 212**	0.122	40	80	63	66	¾
32	25	10	**199 041 206**	0.217	**199 041 213**	0.219	47	96	75	80	1
40	32	10	**199 041 207**	0.352	**199 041 214**	0.329	56	111	86	100	1 ¼
50	40	10	**199 041 208**	0.662	**199 041 215**	0.662	70	133	101	120	1 ½
63	50	10	**199 041 209**	1.213	**199 041 216**	1.213	88	158	118	146	2



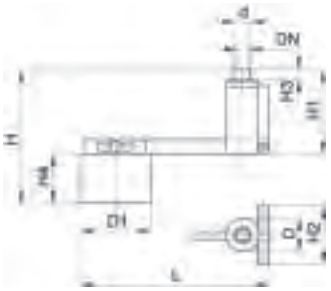

Float valve type V140 PVC-U
With solvent cement spigots metric

- Lever 1:10

d (mm)	DN (mm)	PN (bar)	EPDM Code	Weight (kg)	FPM Code	Weight (kg)
16	10	6	**199 041 147**	0.300	**199 041 156**	0.300
20	15	6	**199 041 148**	0.300	**199 041 157**	0.300
25	20	6	**199 041 149**	2.469	**199 041 158**	0.300
32	25	6	**199 041 150**	0.400	**199 041 159**	0.400
40	32	6	**199 041 151**	4.500	**199 041 160**	4.000
50	40	6	**199 041 152**	6.200	**199 041 161**	6.200
63	50	6	**199 041 153**	8.100	**199 041 162**	8.100
75	65	6	**199 041 154**	10.400	**199 041 163**	10.400
90	80	6	**199 041 155**	11.400	**199 041 164**	11.400

d (mm)	D (mm)	D1 (mm)	H (mm)	H1 (mm)	H2 (mm)	H3 (mm)	H4 (mm)	L (mm)	closest inch (inch)
16	45	125	270	120	80	14	130	380	⅜
20	45	125	270	120	80	16	130	380	½
25	65	200	340	160	110	19	170	530	¾
32	65	200	345	165	110	22	170	530	1
40	90	225	440	210	130	26	210	720	1 ¼
50	90	225	445	215	130	31	210	720	1 ½
63	130	315	595	255	160	38	290	975	2
75	130	315	600	260	160	44	290	975	2 ½
90	150	355	640	290	180	51	340	1140	3

Cone check valves



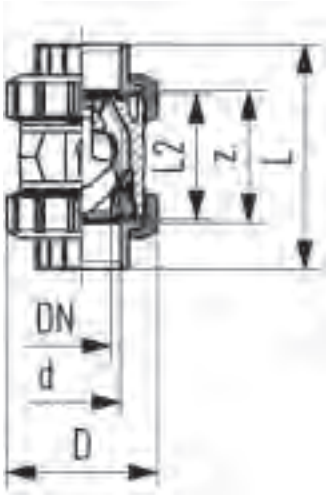

Check valve type 561 PVC-U
With transparent housing
With solvent cement sockets metric

Model:

- Designed for easy installation and removal
- Vibration free even at high flow velocity
- Flow-optimized return cone, double guided
- For vertical installation
- Compact installation length, same as ball valve type 546
- Z-length, end connectors and union nuts **not** compatible with type 360
- Sealing at a minimum water column of 2 m

d (mm)	DN (mm)	PN (bar)	kv-value (Δp=1 bar) (l/min)	EPDM Code	Weight (kg)	D (mm)	L (mm)	L2 (mm)	z (mm)	closest inch (inch)
32	25	16	460	**192 561 004**	0.290	68	123	71	79	1
63	50	16	1670	**192 561 007**	1.330	124	183	101	107	2



Check valve type 561 PVC-U
With solvent cement spigots metric

Model:

- Sealing at a minimum water column of 2 m
- Designed for easy installation and removal
- Vibration free even at high flow velocity
- Flow-optimized return cone, double guided
- For vertical installation
- Compact installation length, same as ball valve type 546
- Z-length, end connectors and union nuts **not** compatible with type 360

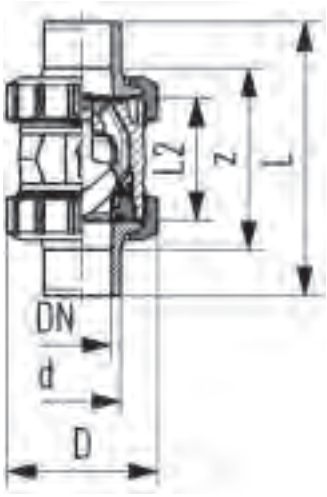

d (mm)	DN (mm)	PN (bar)	kv-value (Δp=1 bar) (l/min)	EPDM Code	Weight (kg)	FPM Code	Weight (kg)
16	10	16	190	**161 561 041**	0.130	**161 561 051**	0.130
20	15	16	180	**161 561 042**	0.130	**161 561 052**	0.130
25	20	16	380	**161 561 043**	0.188	**161 561 053**	0.290
32	25	16	460	**161 561 044**	0.296	**161 561 054**	0.320
40	32	16	850	**161 561 045**	0.530	**161 561 055**	0.530
50	40	16	1080	**161 561 046**	0.762	**161 561 056**	0.810
63	50	16	1670	**161 561 047**	1.419	**161 561 057**	1.450
75	65	16	2950	**161 561 048**	3.370	**161 561 058**	3.380
90	80	16	3600	**161 561 049**	5.320	**161 561 059**	5.340
110	100	16	4150	**161 561 050**	8.500	**161 561 060**	8.540

d (mm)	D (mm)	L (mm)	L2 (mm)	closest inch (inch)
16	50	114	56	⅜
20	50	124	56	½
25	58	144	65	¾
32	68	154	71	1
40	84	174	85	1 ¼
50	97	194	89	1 ½
63	124	224	101	2
75	166	284	136	2 ½
90	200	300	141	3
110	238	340	164	4



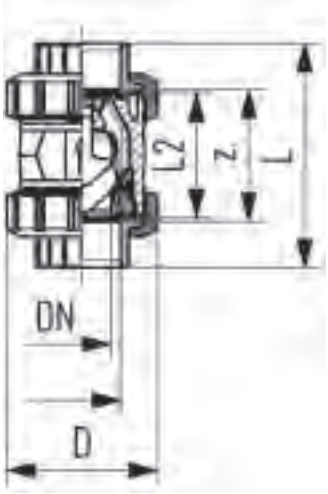

Check valve type 561 PVC-U
With threaded sockets Rp

Model:

- Designed for easy installation and removal
- Vibration free even at high flow velocity
- Flow-optimized return cone, double guided
- For vertical installation
- Compact installation length, same as ball valve type 546
- Z-length, end connectors and union nuts **not** compatible with type 360

Rp (inch)	DN (mm)	PN (bar)	kv-value (Δp=1 bar) (l/min)	EPDM Code	Weight (kg)	FPM Code	Weight (kg)
⅜	10	10	190	**161 561 021**	0.130	**161 561 031**	0.130
½	15	10	180	**161 561 022**	0.130	**161 561 032**	0.130
¾	20	10	380	**161 561 023**	0.260	**161 561 033**	0.280
1	25	10	460	**161 561 024**	0.300	**161 561 034**	0.300
1 ¼	32	10	850	**161 561 025**	0.510	**161 561 035**	0.520
1 ½	40	10	1080	**161 561 026**	0.780	**161 561 036**	0.790
2	50	10	1670	**161 561 027**	1.390	**161 561 037**	1.400
2 ½	65	10	2950	**161 561 028**	3.800	**161 561 038**	3.820
3	80	10	3600	**161 561 029**	5.160	**161 561 039**	5.180
4	100	10	4150	**161 561 030**	8.140	**161 561 040**	8.180

Rp (inch)	D (mm)	L (mm)	L2 (mm)	z (mm)
⅜	50	95	56	69
½	50	100	56	67
¾	58	114	65	78
1	68	127	71	85
1 ¼	84	146	85	100
1 ½	97	152	89	106
2	124	177	101	121
2 ½	166	233	136	144
3	200	254	141	151
4	238	301	164	174



Check valve type 561 PVC-U
With fixed flanges metric

Model:

- Designed for easy installation and removal
- Vibration free even at high flow velocity
- Flow-optimized return cone, double guided
- For vertical installation
- Compact installation length, same as ball valve type 546
- Installation length according to EN 558-1
- Z-length, end connectors and union nuts **not** compatible with type 360
- Connecting dimension: ISO 7005 PN10, EN 1092 PN10, DIN 2501 PN10
- Sealing at a minimum water column of 2 m

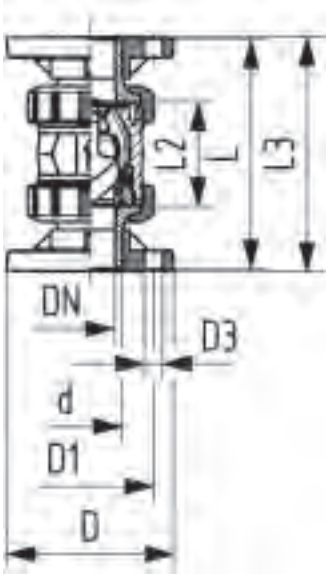

d (mm)	DN (mm)	PN (bar)	kv-value (Δp=1 bar) (l/min)	EPDM Code	Weight (kg)	FPM Code	Weight (kg)
20	15	16	180	**161 561 082**	0.330	**161 561 092**	0.330
25	20	16	380	**161 561 083**	0.520	**161 561 093**	0.540
32	25	16	460	**161 561 084**	0.670	**161 561 094**	0.670
40	32	16	850	**161 561 085**	1.100	**161 561 095**	1.100
50	40	16	1080	**161 561 086**	1.490	**161 561 096**	1.490
63	50	16	1670	**161 561 087**	2.430	**161 561 097**	2.440

d (mm)	D (mm)	D1 (mm)	D3 (mm)	L (mm)	L2 (mm)	L3 (mm)	closest inch (inch)
20	95	65	14	124	56	130	½
25	105	75	14	144	65	150	¾
32	115	85	14	154	71	160	1
40	140	100	18	174	85	180	1 ¼
50	150	110	18	194	89	200	1 ½
63	165	125	18	224	101	230	2



Check valve type 561 PVC-U
With backing flanges PVC-U metric

Model:

- Designed for easy installation and removal
- Vibration free even at high flow velocity
- Flow-optimized return cone, double guided
- For vertical installation
- Compact installation length, same as ball valve type 546
- Z-length, end connectors and union nuts **not** compatible with type 360
- Overall length according to EN 558
- Connecting dimension: ISO 7005 PN10, EN 1092 PN10, DIN 2501 PN10
- Sealing at a minimum water column of 2 m

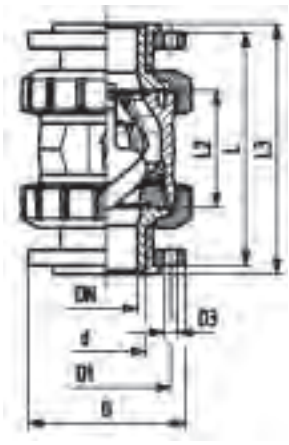

d (mm)	DN (mm)	PN (bar)	kv-value (Δp=1 bar) (l/min)	EPDM Code	Weight (kg)	FPM Code	Weight (kg)
75	65	16	2950	**161 561 408**	4.440	**161 561 418**	4.450
90	80	16	3600	**161 561 409**	6.740	**161 561 419**	6.770
110	100	16	4150	**161 561 410**	10.280	**161 561 420**	10.320

d (mm)	D (mm)	H (mm)	H1 (mm)	L (mm)	L1 (mm)	L2 (mm)	L4 (mm)	L5 (mm)	L6 (mm)	M	closest inch (inch)
75	166	149	85	284	270	136	70	64	206	M8	1 ¼
90	200	161	105	300	270	141	70	64	206	M8	1 ½
110	238	178	123	340	320	164	120	64	256	M12	2



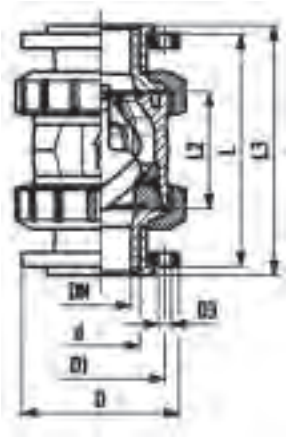

Check valve type 561 PVC-U
With backing flanges PP-st metric

Model:

- Designed for easy installation and removal
- Vibration free even at high flow velocity
- Flow-optimized return cone, double guided
- For vertical installation
- Compact installation length, same as ball valve type 546
- Z-length, end connectors and union nuts **not** compatible with type 360
- Overall length according to EN 558
- Connecting dimension: ISO 7005, EN 1092, BS 4504, DIN 2501
- Sealing at a minimum water column of 2 m

d (mm)	DN (mm)	PN (bar)	kv-value (Δp=1 bar) (l/min)	EPDM Code	Weight (kg)	FPM Code	Weight (kg)
75	65	10	2950	**161 561 428**	4.640	**161 561 438**	4.640
90	80	10	3600	**161 561 429**	5.810	**161 561 439**	5.810
110	100	10	4150	**161 561 430**	8.160	**161 561 440**	8.160

d (mm)	D (mm)	H (mm)	H1 (mm)	L (mm)	L1 (mm)	L2 (mm)	L3 (mm)	L4 (mm)	L5 (mm)	L6 (mm)	closest inch (inch)
75	166	149	85	284	270	136	290	70	64	206	1 ¼
90	200	161	105	300	270	141	310	70	64	206	1 ½
110	238	178	123	340	320	164	350	120	64	256	2



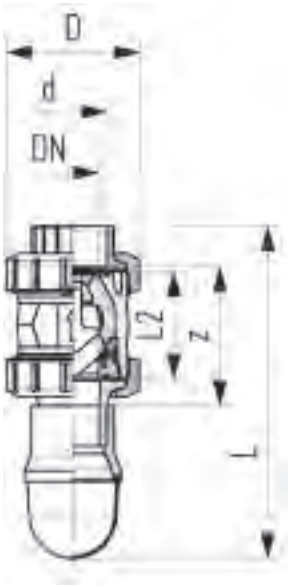

Foot valve type 561 PVC-U
With solvent cement sockets metric

Model:

- Designed for easy installation and removal
- Vibration free even at high flow velocity
- Flow-optimized return cone, double guided
- Compact installation length, same as ball valve type 546
- Z-length, end connectors and union nuts **not** compatible with type 360
- Sealing at a minimum water column of 2 m

d (mm)	DN (mm)	PN (bar)	kv-value (Δp=1 bar) (l/min)	EPDM Code	Weight (kg)	D (mm)	L (mm)	L2 (mm)	z (mm)	closest inch (inch)
16	10	16	190	**161 561 901**	0.120	50	173	56	64	⅜
20	15	16	180	**161 561 902**	0.130	50	175	56	64	½
25	20	16	380	**161 561 903**	0.250	58	192	65	72	¾
32	25	16	460	**161 561 904**	0.290	68	204	71	79	1
40	32	16	850	**161 561 905**	0.510	90	267	85	94	1 ¼
50	40	16	1080	**161 561 906**	0.750	90	282	83	95	1 ½
63	50	16	1670	**161 561 907**	1.330	90	310	101	107	2



Check valve type 562 PVC-U
With solvent cement sockets metric

Model:

- For horizontal or vertical installation
- Sealing at a minimum water column of 1 m
- Spring loaded, spring made of stainless steel (1.4310)
- Spring available in other materials, see spare parts
- Designed for easy installation and removal
- Vibration free even at high flow velocity
- Flow-optimized return cone, double guided
- Compact installation length, same as ball valve type 546
- Z-length, end connectors and union nuts **not** compatible with type 360

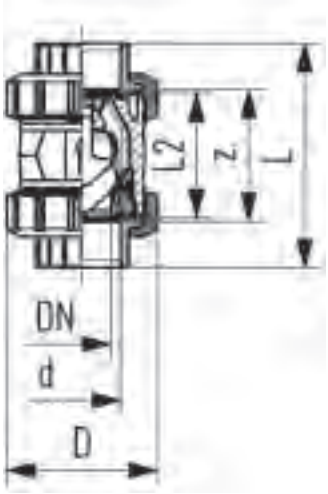

d (mm)	DN (mm)	PN (bar)	kv-value (Δp=1 bar) (l/min)	EPDM Code	Weight (kg)	FPM Code	Weight (kg)
16	10	16	190	**161 562 001**	0.120	**161 562 011**	0.120
20	15	16	180	**161 562 002**	0.130	**161 562 012**	0.130
25	20	16	380	**161 562 003**	0.250	**161 562 013**	0.270
32	25	16	460	**161 562 004**	0.290	**161 562 014**	0.290
40	32	16	850	**161 562 005**	0.510	**161 562 015**	0.510
50	40	16	1080	**161 562 006**	0.750	**161 562 016**	0.750
63	50	16	1670	**161 562 007**	1.330	**161 562 017**	1.340
75	65	16	2950	**161 562 008**	3.160	**161 562 018**	3.170
90	80	16	3600	**161 562 009**	5.040	**161 562 019**	5.060
110	100	16	4150	**161 562 010**	8.130	**161 562 020**	8.170

d (mm)	D (mm)	L (mm)	L2 (mm)	z (mm)	closest inch (inch)
16	50	92	56	64	⅜
20	50	95	56	64	½
25	58	110	65	72	¾
32	68	123	71	79	1
40	84	146	85	94	1 ¼
50	97	157	89	95	1 ½
63	124	183	101	107	2
75	166	233	136	144	2 ½
90	200	254	141	151	3
110	238	301	164	174	4



Check valve type 562 PVC-U
With solvent cement spigots metric

Model:

- For horizontal or vertical installation
- Spring loaded, spring made of stainless steel (1.4310)
- Spring available in other materials, see spare parts
- Designed for easy installation and removal
- Vibration free even at high flow velocity
- Flow-optimized return cone, double guided
- Compact installation length, same as ball valve type 546
- Z-length, end connectors and union nuts **not** compatible with type 360

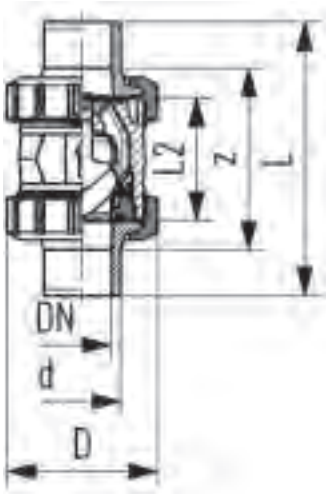

d (mm)	DN (mm)	PN (bar)	kv-value (Δp=1 bar) (l/min)	EPDM Code	Weight (kg)	FPM Code	Weight (kg)
16	10	16	190	**161 562 041**	0.130	**161 562 051**	0.130
20	15	16	180	**161 562 042**	0.130	**161 562 052**	0.130
25	20	16	380	**161 562 043**	0.270	**161 562 053**	0.290
32	25	16	460	**161 562 044**	0.320	**161 562 054**	0.320
40	32	16	850	**161 562 045**	0.530	**161 562 055**	0.530
50	40	16	1080	**161 562 046**	0.810	**161 562 056**	0.810
63	50	16	1670	**161 562 047**	1.450	**161 562 057**	1.450
75	65	16	2950	**161 562 048**	3.370	**161 562 058**	3.380
90	80	16	3600	**161 562 049**	5.320	**161 562 059**	5.340
110	100	16	4150	**161 562 050**	8.500	**161 562 060**	8.540

d (mm)	D (mm)	L (mm)	L2 (mm)	closest inch (inch)
16	50	114	56	⅜
20	50	124	56	½
25	58	144	65	¾
32	68	154	71	1
40	84	174	85	1 ¼
50	97	194	89	1 ½
63	124	224	101	2
75	166	284	136	2 ½
90	200	300	141	3
110	238	340	164	4



Check valve type 562 PVC-U
With threaded sockets Rp

Model:

- For horizontal or vertical installation
- Spring loaded, spring made of stainless steel (1.4310)
- Spring available in other materials, see spare parts
- Designed for easy installation and removal
- Vibration free even at high flow velocity
- Flow-optimized return cone, double guided
- Compact installation length, same as ball valve type 546
- Z-length, end connectors and union nuts **not** compatible with type 360

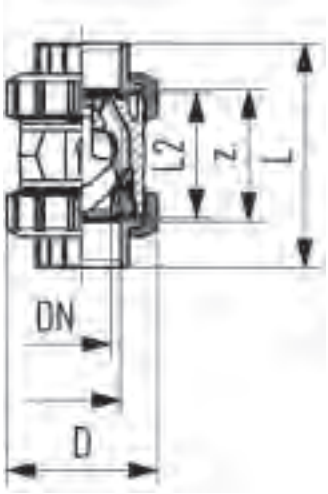

Rp (inch)	DN (mm)	PN (bar)	kv-value (Δp=1 bar) (l/min)	EPDM Code	Weight (kg)	FPM Code	Weight (kg)
⅜	10	10	190	**161 562 021**	0.130	**161 562 031**	0.130
½	15	10	180	**161 562 022**	0.130	**161 562 032**	0.130
¾	20	10	380	**161 562 023**	0.260	**161 562 033**	0.280
1	25	10	460	**161 562 024**	0.300	**161 562 034**	0.300
1 ¼	32	10	850	**161 562 025**	0.510	**161 562 035**	0.520
1 ½	40	10	1080	**161 562 026**	0.780	**161 562 036**	0.790
2	50	10	1670	**161 562 027**	1.390	**161 562 037**	1.400
2 ½	65	10	2950	**161 562 028**	3.800	**161 562 038**	3.820
3	80	10	3600	**161 562 029**	5.160	**161 562 039**	5.180
4	100	10	4150	**161 562 030**	8.140	**161 562 040**	8.180

Rp (inch)	D (mm)	L (mm)	L2 (mm)	z (mm)
⅜	50	95	56	69
½	50	100	56	67
¾	58	114	65	78
1	68	127	71	85
1 ¼	84	146	85	100
1 ½	97	152	89	106
2	124	177	101	121
2 ½	166	233	136	144
3	200	254	141	151
4	238	301	164	174



Check valve type 562 PVC-U
With fixed flanges metric

Model:

- For horizontal or vertical installation
- Spring loaded, spring made of stainless steel (1.4310)
- Spring available in other materials, see spare parts
- Designed for easy installation and removal
- Vibration free even at high flow velocity
- Flow-optimized return cone, double guided
- Compact installation length, same as ball valve type 546
- Installation length according to EN 558-1
- Z-length, end connectors and union nuts **not** compatible with type 360
- Connecting dimension: ISO 7005 PN10, EN 1092 PN10, DIN 2501 PN10

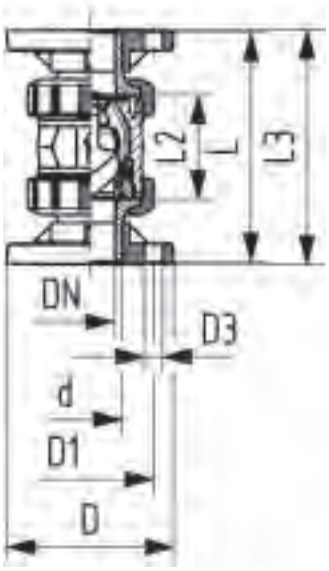

d (mm)	DN (mm)	PN (bar)	kv-value (Δp=1 bar) (l/min)	EPDM Code	Weight (kg)	FPM Code	Weight (kg)
20	15	16	180	**161 562 082**	0.330	**161 562 092**	0.330
25	20	16	380	**161 562 083**	0.520	**161 562 093**	0.540
32	25	16	460	**161 562 084**	0.670	**161 562 094**	0.670
40	32	16	850	**161 562 085**	1.100	**161 562 095**	1.100
50	40	16	1080	**161 562 086**	1.490	**161 562 096**	1.490
63	50	16	1670	**161 562 087**	2.430	**161 562 097**	2.440

d (mm)	D (mm)	D1 (mm)	D3 (mm)	L (mm)	L2 (mm)	L3 (mm)	closest inch (inch)
20	95	65	14	124	56	130	½
25	105	75	14	144	65	150	¾
32	115	85	14	154	71	160	1
40	140	100	18	174	85	180	1 ¼
50	150	110	18	194	89	200	1 ½
63	165	125	18	224	101	230	2



Check valve type 562 PVC-U
With backing flanges PVC-U metric

Model:

- For horizontal or vertical installation
- Spring loaded, spring made of stainless steel (1.4310)
- Spring available in other materials, see spare parts
- Designed for easy installation and removal
- Vibration free even at high flow velocity
- Flow-optimized return cone, double guided
- Compact installation length, same as ball valve type 546
- Z-length, end connectors and union nuts **not** compatible with type 360
- Overall length according to EN 558
- Connecting dimension: ISO 7005 PN10, EN 1092 PN10, DIN 2501 PN10

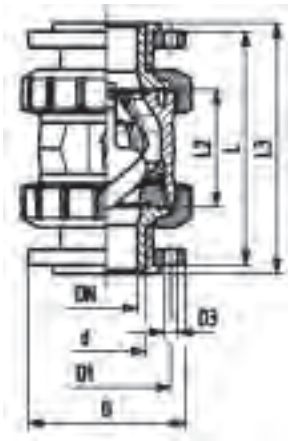

d (mm)	DN (mm)	PN (bar)	kv-value (Δp=1 bar) (l/min)	EPDM Code	Weight (kg)	FPM Code	Weight (kg)
75	65	16	2950	**161 562 408**	4.440	**161 562 418**	4.450
90	80	16	3600	**161 562 409**	6.740	**161 562 419**	6.770
110	100	16	4150	**161 562 410**	10.280	**161 562 420**	10.320

d (mm)	D (mm)	H (mm)	H1 (mm)	L (mm)	L1 (mm)	L2 (mm)	L4 (mm)	L5 (mm)	L6 (mm)	M	closest inch (inch)
75	166	149	85	284	270	136	70	64	206	M8	1 ¼
90	200	161	105	300	270	141	70	64	206	M8	1 ½
110	238	178	123	340	320	164	120	64	256	M12	2



Check valve type 562 PVC-U
With backing flanges PP-st metric

Model:

- For horizontal or vertical installation
- Spring loaded, spring made of stainless steel (1.4310)
- Spring available in other materials, see spare parts
- Designed for easy installation and removal
- Vibration free even at high flow velocity
- Flow-optimized return cone, double guided
- Compact installation length, same as ball valve type 546
- Z-length, end connectors and union nuts **not** compatible with type 360
- Overall length according to EN 558
- Connecting dimension: ISO 7005, EN 1092, BS 4504, DIN 2501

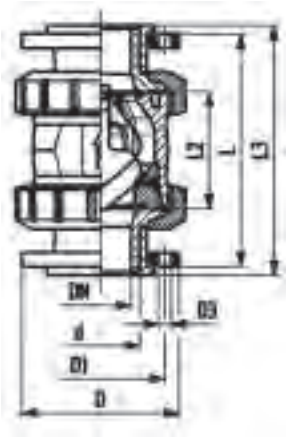

d (mm)	DN (mm)	PN (bar)	kv-value (Δp=1 bar) (l/min)	EPDM Code	Weight (kg)	FPM Code	Weight (kg)
75	65	10	2950	**161 562 428**	6.220	**161 562 438**	6.230
90	80	10	3600	**161 562 429**	8.330	**161 562 439**	8.360
110	100	10	4150	**161 562 430**	12.300	**161 562 440**	12.340

d (mm)	D (mm)	H (mm)	H1 (mm)	L (mm)	L1 (mm)	L2 (mm)	L3 (mm)	L4 (mm)	L5 (mm)	L6 (mm)	closest inch (inch)
75	166	149	85	284	270	136	290	70	64	206	1 ¼
90	200	161	105	300	270	141	310	70	64	206	1 ½
110	238	178	123	340	320	164	350	120	64	256	2

Wafer check valves



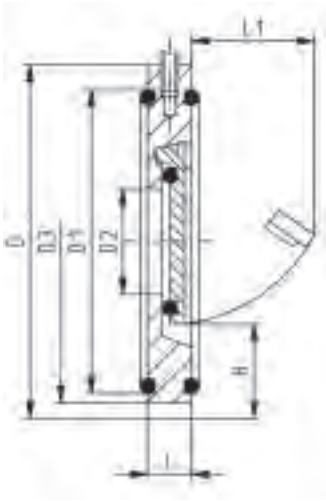

Wafer check valve type 369 PVC-U
Without spring

Model:

- Supporting eyelets for simple fitting
- Suitable for vertical and horizontal mounting

Installation instruction:

- Installation between ISO/DIN (all dimensions) and ANSI flange adaptors (all except DN32 and DN125)
- Installation with ANSI flange adaptor: for wafer check valves DN40 to DN80 you have to use ANSI flange adaptors with the next bigger dimension (example DN40 wafer check valve between DN50 ANSI flange adaptor)
- Centering by body diameter (ISO/DIN by D3, ANSI by D)
- Sealing with special flange gasket (except DN32, o-ring)
- A stabilizing zone of at least 5 times nominal diameter (DN) should be provided before and after the wafer check valve (10 times DN is recommended)
- No direct installation on pump flange or following bend allowed
- The using of PVC-U pipe PN16 is only possible up to d63
- Wafer check valves without reset spring are not recommended for pulsating flows (production of noise)

d (mm)	Size (inch)	DN (mm)	PN (bar)	EPDM Code	Weight (kg)	FPM Code	Weight (kg)
40	1 ¼	32	10	**161 369 002**	0.110	**161 369 022**	0.108
50	1 ½	40	10	**161 369 003**	0.174	**161 369 023**	0.202
63	2	50	10	**161 369 004**	0.273	**161 369 024**	0.277
75	2 ½	65	10	**161 369 005**	0.352	**161 369 025**	0.386
90	3	80	10	**161 369 006**	0.560	**161 369 026**	0.591
110	4	100	10	**161 369 007**	0.651	**161 369 027**	0.667
140	5	125	10	**161 369 009**	0.791	**161 369 029**	0.856
160	6	150	6	**161 369 010**	1.153	**161 369 030**	1.207
225	8	200	6	**161 369 011**	2.215	**161 369 031**	2.306
280	10	250	6	**161 369 012**	3.850	**161 369 032**	3.915
315	12	300	6	**161 369 013**	7.059	**161 369 033**	5.300

d (mm)	D (mm)	D1 (mm)	D2 (mm)	D3 (mm)	H (mm)	L (mm)	L1 (mm)	Opening pressure vertical (mbar)	Opening pressure horizontal (mbar)	Minimum water column for sealing (m)
40	85	59	18	85	25	15	22	10	1	2
50	105	74	22	95	27	16	27	10	1	2
63	124	90	32	109	29	18	40	10	1	2
75	137	110	40	129	31	20	55	10	1	2
90	175	130	54	144	32	20	67	10	1	2
110	175	150	70	164	31	23	67	10	1	2
140	195	178	92	195	35	23	94	10	1	2
160	222	192	105	220	41	26	100	10	1	2
225	279	256	154	275	38	35	152	18	1	2
280	340	306	192	330	41	40	180	18	1	2
315	410	342	227	380	41	45	215	18	1	2



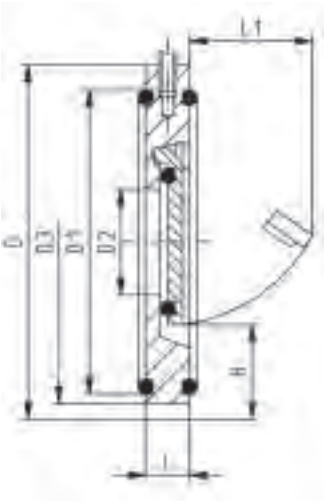

Wafer check valve type 369 PVC-U
With Hastelloy C spring

Model:

- Supporting eyelets for simple fitting
- Suitable for vertical and horizontal mounting

Installation instruction:

- Installation between ISO/DIN (all dimensions) and ANSI flange adaptors (all except DN32 and DN125)
- Installation with ANSI flange adaptor: for wafer check valves DN40 to DN80 you have to use ANSI flange adaptors with the next bigger dimension (example DN40 wafer check valve between DN50 ANSI flange adaptor)
- Centering by body diameter (ISO/DIN by D3, ANSI by D)
- Sealing with special flange gasket (except DN32, o-ring)
- A stabilizing zone of at least 5 times nominal diameter (DN) should be provided before and after the wafer check valve (10 times DN is recommended)
- No direct installation on pump flange or following bend allowed
- The using of PVC-U pipe PN16 is only possible up to d63

d (mm)	Size (inch)	DN (mm)	PN (bar)	EPDM Code	Weight (kg)	FPM Code	Weight (kg)
40	1 ¼	32	10	**161 369 082**	0.130	**161 369 102**	0.130
50	1 ½	40	10	**161 369 083**	0.174	**161 369 103**	0.160
63	2	50	10	**161 369 084**	0.250	**161 369 104**	0.277
75	2 ½	65	10	**161 369 085**	0.320	**161 369 105**	0.320
90	3	80	10	**161 369 086**	0.390	**161 369 106**	0.390
110	4	100	10	**161 369 087**	0.654	**161 369 107**	0.550
140	5	125	10	**161 369 089**	0.750	**161 369 109**	0.750
160	6	150	6	**161 369 090**	1.164	**161 369 110**	1.100
225	8	200	6	**161 369 091**	2.100	**161 369 111**	2.100
280	10	250	6	**161 369 092**	3.500	**161 369 112**	3.500
315	12	300	6	**161 369 093**	5.300	**161 369 113**	5.300

d (mm)	D (mm)	D1 (mm)	D2 (mm)	D3 (mm)	H (mm)	L (mm)	L1 (mm)	Opening pressure vertical (mbar)	Opening pressure horizontal (mbar)	Minimum water column for sealing (m)
40	85	59	18	85	25	15	22	30	20	2
50	105	74	22	95	27	16	27	30	20	2
63	124	90	32	109	29	18	40	30	20	2
75	137	110	40	129	31	20	55	30	20	2
90	175	125	54	144	32	20	67	30	20	2
110	175	150	70	164	31	23	67	30	20	2
140	195	178	92	195	35	23	94	30	20	2
160	222	192	105	220	41	26	100	30	20	2
225	279	256	154	275	38	35	152	38	20	2
280	340	306	192	330	41	40	180	38	20	2
315	410	342	227	380	41	45	215	38	20	2



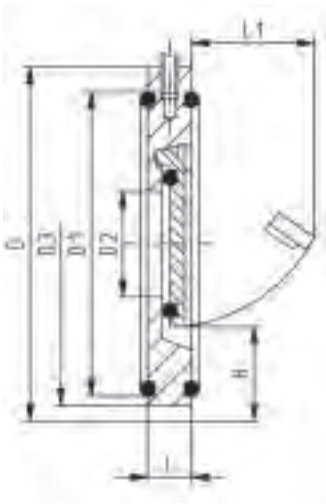

Wafer check valve type 369 PVC-U
With V4A spring (stainless steel 316)

Model:

- Supporting eyelets for simple fitting
- Suitable for vertical and horizontal mounting

Installation instruction:

- Installation between ISO/DIN (all dimensions) and ANSI flange adaptors (all except DN32 and DN125)
- Installation with ANSI flange adaptor: for wafer check valves DN40 to DN80 you have to use ANSI flange adaptors with the next bigger dimension (example DN40 wafer check valve between DN50 ANSI flange adaptor)
- Centering by body diameter (ISO/DIN by D3, ANSI by D)
- Sealing with special flange gasket (except DN32, o-ring)
- A stabilizing zone of at least 5 times nominal diameter (DN) should be provided before and after the wafer check valve (10 times DN is recommended)
- No direct installation on pump flange or following bend allowed
- The using of PVC-U pipe PN16 is only possible up to d63

d (mm)	Size (inch)	DN (mm)	PN (bar)	EPDM Code	Weight (kg)	FPM Code	Weight (kg)
40	1 ¼	32	10	**161 369 042**	0.130	**161 369 062**	0.107
50	1 ½	40	10	**161 369 043**	0.160	**161 369 063**	0.206
63	2	50	10	**161 369 044**	0.273	**161 369 064**	0.250
75	2 ½	65	10	**161 369 045**	0.357	**161 369 065**	0.320
90	3	80	10	**161 369 046**	0.561	**161 369 066**	0.390
110	4	100	10	**161 369 047**	0.651	**161 369 067**	0.684
140	5	125	10	**161 369 049**	0.791	**161 369 069**	0.750
160	6	150	6	**161 369 050**	1.171	**161 369 070**	1.100
225	8	200	6	**161 369 051**	2.252	**161 369 071**	2.100
280	10	250	6	**161 369 052**	3.790	**161 369 072**	3.500
315	12	300	6	**161 369 053**	6.274	**161 369 073**	5.300

d (mm)	D (mm)	D1 (mm)	D2 (mm)	D3 (mm)	H (mm)	L (mm)	L1 (mm)	Opening pressure vertical (mbar)	Opening pressure horizontal (mbar)	Minimum water column for sealing (m)
40	85	59	18	85	25	15	22	30	20	2
50	105	74	22	95	27	16	27	30	20	2
63	124	90	32	109	29	18	40	30	20	2
75	137	110	40	129	31	20	55	30	20	2
90	175	125	54	144	32	20	67	30	20	2
110	175	150	70	164	31	23	67	30	20	2
140	195	178	92	195	35	23	94	30	20	2
160	222	192	105	220	41	26	100	30	20	2
225	279	256	154	275	38	35	152	38	20	2
280	340	306	192	330	41	40	180	38	20	2
315	410	342	227	380	41	45	215	38	20	2

Angle seat valves



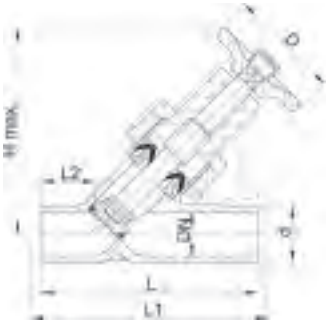

Angle seat valve type 300 PVC-U
With solvent cement spigots metric

Model:

- Overall length EN 558

d (mm)	DN (mm)	PN (bar)	kv-value (Δp=1 bar) (l/min)	PE Code	Weight (kg)	PTFE Code	Weight (kg)
16	10	10	41	**161 300 250**	0.125	**161 300 299**	0.128
20	15	10	95	**161 300 300**	0.164	**161 300 349**	0.168
25	20	10	180	**161 300 350**	0.223	**161 300 399**	0.255
32	25	10	327	**161 300 400**	0.352	**161 300 449**	0.389
40	32	10	484	**161 300 450**	0.534	**161 300 499**	0.590
50	40	10	725	**161 300 500**	0.970	**161 300 549**	1.000
63	50	10	1130	**161 300 550**	1.510	**161 300 599**	1.540
75	65	10	1700	**161 300 600**	2.664	**161 300 649**	2.713
90	80	10	2500	**161 300 650**	3.370	**161 300 699**	4.097

d (mm)	D (mm)	L (mm)	L1 (mm)	L2 (mm)	closest inch (inch)	H max. (mm)
16	50	114	120	24	⅜	105
20	63	124	130	28	½	126
25	63	144	150	37	¾	140
32	80	154	160	37	1	166
40	80	174	180	44	1 ¼	191
50	100	194	200	48	1 ½	233
63	100	224	230	60	2	264
75	160	284	290	74	2 ½	335
90	200	300	310	85	3	390



Angle seat valve bracket type 123 PVC-U

Model:

- Can be fitted to existing installations without interrupting their operation
- Easily assembled without tools
- For Angle Seat Valves Type 300

d (mm)	DN (mm)	Code	Weight (kg)
16	10	**161 123 250**	0.114
20	15	**161 123 300**	0.146
25	20	**161 123 350**	0.230
32	25	**161 123 400**	0.289
40	32	**161 123 450**	0.374

table continued on the next page

d (mm)	H (mm)	H1 (mm)	H2 (mm)	H3 (mm)	H4 (mm)	L (mm)	L1 (mm)	L2 (mm)	L3 (mm)	L4 (mm)	L5 (mm)	L6 (mm)	closest inch (inch)
16	76	55	11	15	9	62	8	7	78	67	10	22	⅜
20	86	65	11	17	11	65	9	7	82	74	10	25	½
25	100	76	12	20	17	73	9	8	91	87	11	30	¾
32	102	78	12	23	14	84	9	8	102	104	13	35	1
40	116	85	16	27	17	90	9	8	107	122	15	42	1 ¼

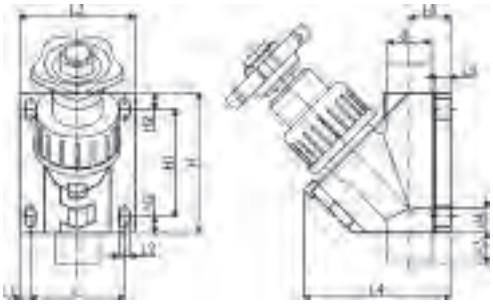



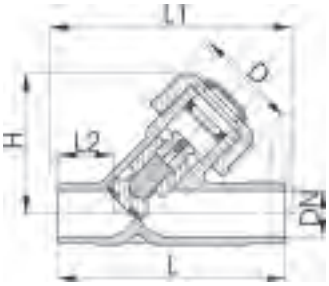

Angle seat check valve type 303 PVC-U
With solvent cement spigots metric

Model:

- For horizontal or vertical installation
- Leakproof from: EPDM 2m, FPM 3m water column
- Specific gravity of piston approx. 2 kg/dm^3
- Overall length EN 558

d (mm)	DN (mm)	PN (bar)	kv-value (Δp=1 bar) (l/min)	EPDM Code	Weight (kg)	FPM Code	Weight (kg)
16	10	10	41	**161 303 005**	0.075	**161 303 030**	0.094
20	15	10	95	**161 303 006**	0.113	**161 303 031**	0.132
25	20	10	180	**161 303 007**	0.170	**161 303 032**	0.172
32	25	10	327	**161 303 008**	0.288	**161 303 033**	0.290
40	32	10	484	**161 303 009**	0.444	**161 303 034**	0.448
50	40	10	725	**161 303 010**	0.791	**161 303 035**	0.798
63	50	10	1130	**161 303 011**	1.345	**161 303 036**	1.345
75	65	10	1700	**161 303 012**	2.483	**161 303 037**	2.499
90	80	10	2500	**161 303 013**	3.514	**161 303 038**	3.540

d (mm)	D (mm)	H (mm)	L (mm)	L1 (mm)	L2 (mm)	closest inch (inch)
16	39	58	114	120	24	⅜
20	43	65	124	130	28	½
25	47	75	144	150	37	¾
32	56	90	154	160	37	1
40	64	102	174	180	44	1 ¼
50	82	123	194	200	48	1 ½
63	95	144	224	230	60	2
75	92	186	284	290	74	2 ½
90	104	204	300	310	85	3

Solenoid valves



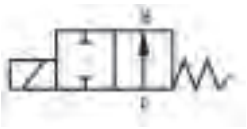



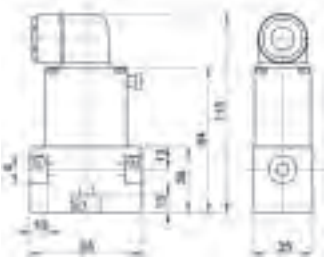

Solenoid valve type 157
Straight-through valve 2/2 ways

Model:

- Material PVC-U: with threaded sockets parallel female thread Rp
- With manual override
- Electrical connection: cable plug
- Protection class IP 65

DN (mm)	Inch (inch)	Voltage	PN (bar)	Function	EPDM Code	FPM Code
4	G3/8	24V	0 - 4	B	**199 157 647**	**199 157 642**
6	G3/8	24V	0 - 2	B	**199 157 648**	**199 157 643**
8	G3/8	24V AC/DC	0 - 1	B	**199 157 649**	**199 157 644**
4	G3/8	230V 50Hz ± 10%	0 - 4	B	**199 157 027**	**199 157 022**
6	G3/8	230V 50Hz ± 10%	0 - 2	B	**199 157 028**	**199 157 023**
8	G3/8	230V 50Hz ± 10%	0 - 1	B	**199 157 029**	**199 157 024**
4	G3/8	24V	0 - 4	A	**199 157 627**	**199 157 622**
6	G3/8	24V	0 - 1	A	**199 157 628**	**199 157 623**
8	G3/8	24V AC/DC	0 - 1	A	**199 157 629**	**199 157 624**
4	G3/8	230V 50Hz ± 10%	0 - 4	A	**199 157 007**	**199 157 002**
6	G3/8	230V 50Hz ± 10%	0 - 2	A	**199 157 008**	**199 157 003**
8	G3/8	230V 50Hz ± 10%	0 - 1	A	**199 157 009**	**199 157 004**



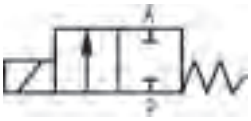



Solenoid valve type 160
Straight through valve 2/2 ways

Model:

- Material: PVC-U
- With solvent cement socket metric
- With manual override
- Electric connection with cable plug
- Protection class IP 65

d (mm)	DN (mm)	Voltage	PN (bar)	kv-value (Δp=1 bar) (l/min)	Function	EPDM Code	FPM Code
16	10	230V 50Hz ± 10%	0.0 - 3.0	33	A	**199 160 010**	**199 160 005**
20	10	230V 50Hz ± 10%	0.0 - 3.0	33	A	**199 160 011**	**199 160 006**
20	15	230V 50Hz ± 10%	0.0 - 1.0	75	A	**199 160 012**	**199 160 007**
25	15	230V 50Hz ± 10%	0.0 - 1.0	75	A	**199 160 013**	**199 160 008**
25	20	230V 50Hz ± 10%	0.0 - 0.5	100	A	**199 160 014**	**199 160 009**
16	10	230V 50Hz ± 10%	0.0 - 2.0	33	B	**199 160 025**	**199 160 020**
20	10	230V 50Hz ± 10%	0.0 - 2.0	33	B	**199 160 026**	**199 160 021**
20	15	230V 50Hz ± 10%	0.0 - 1.0	75	B	**199 160 027**	**199 160 022**
25	15	230V 50Hz ± 10%	0.0 - 1.0	75	B	**199 160 028**	**199 160 023**
25	20	230V 50Hz ± 10%	0.0 - 0.5	100	B	**199 160 029**	**199 160 024**
16	10	24V AC/DC	0.0 - 3.0	33	A	**199 160 370**	**199 160 365**
20	10	24V AC/DC	0.0 - 3.0	33	A	**199 160 371**	**199 160 366**
20	15	24V AC/DC	0.0 - 1.0	75	A	**199 160 372**	**199 160 367**
25	15	24V AC/DC	0.0 - 1.0	75	A	**199 160 373**	**199 160 368**
25	20	24V AC/DC	0.0 - 0.5	100	A	**199 160 374**	**199 160 369**
16	10	24V AC/DC	0.0 - 2.0	33	B	**199 160 385**	**199 160 380**
20	10	24V AC/DC	0.0 - 2.0	33	B	**199 160 386**	**199 160 381**
20	15	24V AC/DC	0.0 - 1.0	75	B	**199 160 387**	**199 160 382**
25	15	24V AC/DC	0.0 - 1.0	75	B	**199 160 388**	**199 160 383**
25	20	24V AC/DC	0.0 - 0.5	100	B	**199 160 389**	**199 160 384**

d (mm)	L (mm)	L1 (mm)	L2 (mm)
16	30	17	14
20	30	17	14
20	33	19	16
25	33	19	16
25	37	22	19
16	30	17	14
20	30	17	14
20	33	19	16
25	33	19	16
25	37	22	19
16	30	17	14
20	30	17	14
20	33	19	16
25	33	19	16
25	37	22	19
16	30	17	14
20	30	17	14
20	33	19	16
25	33	19	16
25	37	22	19







Solenoid valve type 161
Mixing valve 3/2 ways

Model:

- Material: PVC-U
- With solvent cement socket metric
- With manual override
- Electrical connection: cable plug
- Protection class IP 65

d (mm)	DN (mm)	Voltage	PN (bar)	kv-value (Δp=1 bar) (l/min)	Function	EPDM Code	FPM Code
16	10	24V AC/DC	0.00 - 0.60	33	E	**199 161 430**	**199 161 425**
20	10	24V AC/DC	0.00 - 0.60	33	E	**199 161 431**	**199 161 426**
20	15	24V AC/DC	0.00 - 0.30	67	E	**199 161 432**	**199 161 427**
25	15	24V AC/DC	0.00 - 0.30	67	E	**199 161 433**	**199 161 428**
25	20	24V AC/DC	0.00 - 0.20	83	E	**199 161 434**	**199 161 429**
16	10	230V 50Hz ± 10%	0.00 - 1.00	33	F	**199 161 055**	**199 161 050**
20	10	230V 50Hz ± 10%	0.00 - 1.00	33	F	**199 161 056**	**199 161 051**
20	15	230V 50Hz ± 10%	0.00 - 0.50	67	F	**199 161 057**	**199 161 052**
25	15	230V 50Hz ± 10%	0.00 - 0.50	67	F	**199 158 058**	**199 161 053**
25	20	230V 50Hz ± 10%	0.00 - 0.25	83	F	**199 161 059**	**199 161 054**
16	10	230V 50Hz ± 10%	0.00 - 0.60	33	E	**199 161 040**	**199 161 035**
20	10	230V 50Hz ± 10%	0.00 - 0.60	33	E	**199 161 041**	**199 161 036**
20	15	230V 50Hz ± 10%	0.00 - 0.30	67	E	**199 161 042**	**199 161 037**
25	15	230V 50Hz ± 10%	0.00 - 0.30	67	E	**199 161 043**	**199 161 038**
25	20	230V 50Hz ± 10%	0.00 - 0.20	83	E	**199 161 044**	**199 161 039**
16	10	24V AC/DC	0.00 - 1.00	33	F	**199 161 445**	**199 161 440**
20	10	24V AC/DC	0.00 - 1.00	33	F	**199 161 446**	**199 161 441**
20	15	24V AC/DC	0.00 - 0.50	67	F	**199 161 447**	**199 161 442**
25	15	24V AC/DC	0.00 - 0.50	67	F	**199 161 448**	**199 161 443**
25	20	24V AC/DC	0.00 - 0.25	83	F	**199 161 449**	**199 161 444**

d (mm)	L (mm)	L2 (mm)	H (mm)	H1 (mm)	L1 (mm)
16	30	14	40	30	17
20	30	14	40	30	17
20	33	16	43	33	19
25	33	16	43	33	19
25	37	19	47	37	22
16	30	14	40	30	17
20	30	14	40	30	17
20	33	16	43	33	19
25	33	16	43	33	19
25	37	19	47	37	22
16	30	14	40	30	17
20	30	14	40	30	17
20	33	16	43	33	19
25	33	16	43	33	19
25	37	19	47	37	22
16	30	14	40	30	17
20	30	14	40	30	17
20	33	16	43	33	19
25	33	16	43	33	19
25	37	19	47	37	22



Solenoid valve type 165
Straight-through valve 2/2 ways
230V 50Hz

Model:

- Function A, PN 0.5-6bar
- Material PVDF: with fusion socket metric
- Material PVC-U: with solvent cement socket metric
- Protection class IP 65
- Electrical connection: cable plug
- With manual override

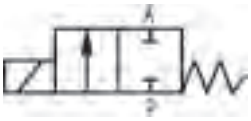

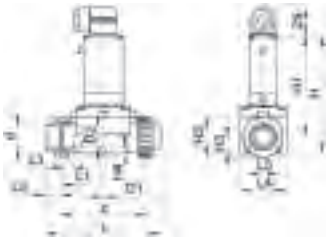

d (mm)	DN (mm)	kv-value (Δp=1 bar) (l/min)	PVC-U EPDM Code	PVC-U FPM Code
20	15	83	**199 165 012**	**199 165 002**
25	20	100	**199 165 013**	**199 165 003**
32	25	233	**199 165 014**	**199 165 004**
40	32	267	**199 165 015**	**199 165 005**
50	40	500	**199 165 016**	**199 165 006**
63	50	600	**199 165 017**	**199 165 007**

d (mm)	H4 (mm)	L2 (mm)	L5 (mm)	z (mm)	H2 (mm)	L (mm)	L1 (mm)	H (mm)	H3 (mm)	H1 (mm)	L4 (mm)
20	8	16	40	116	53	148	110	148	22	122	63
25	8	19	40	116	53	154	110	148	22	122	62
32	15	22	45	147	76	190	141	175	31	137	85
40	15	26	45	147	76	198	141	175	31	137	85
50	15	31	45	198	105	254	192	212	42	160	115
63	15	38	45	198	105	268	192	212	42	160	115



Solenoid valve type 165
Straight-through valve 2/2 ways
115V 50Hz

Model:

- Function A, PN 0.5-6bar
- Material PVDF: with fusion socket metric
- Material PVC-U: with solvent cement socket metric
- Protection class IP 65
- Electrical connection: cable plug
- With manual override

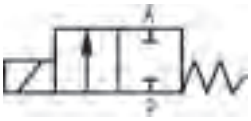

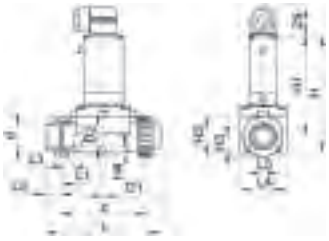

d (mm)	DN (mm)	kv-value (Δp=1 bar) (l/min)	PVC-U EPDM Code	PVC-U FPM Code
20	15	83	**199 165 042**	**199 165 032**
25	20	100	**199 165 043**	**199 165 033**
32	25	233	**199 165 044**	**199 165 034**
40	32	267	**199 165 045**	**199 165 035**
50	40	500	**199 165 046**	**199 165 036**
63	50	600	**199 165 047**	**199 165 037**

d (mm)	H4 (mm)	L2 (mm)	L5 (mm)	z (mm)	H2 (mm)	L (mm)	L1 (mm)	H (mm)	H3 (mm)	H1 (mm)	L4 (mm)
20	8	16	40	116	53	148	110	148	22	122	63
25	8	19	40	116	53	154	110	148	22	122	62
32	15	22	45	147	76	190	141	175	31	137	85
40	15	26	45	147	76	198	141	175	31	137	85
50	15	31	45	198	105	254	192	212	42	160	115
63	15	38	45	198	105	268	192	212	42	160	115



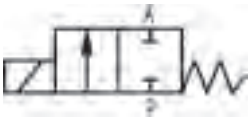

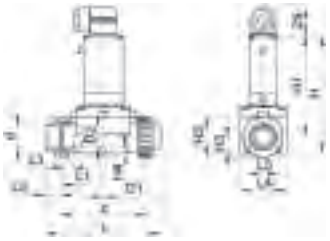

Solenoid valve type 165
Straight-through valve 2/2 ways
24V DC

Model:

- Function A, PN 0.5-6bar
- Material PVDF: with fusion socket metric
- Material PVC-U: with solvent cement socket metric
- Protection class IP 65
- Electrical connection: cable plug
- With manual override

d (mm)	DN (mm)	kv-value (Δp=1 bar) (l/min)	PVC-U EPDM Code	PVC-U FPM Code
20	15	83	**199 165 022**	**199 165 072**
25	20	100	**199 165 023**	**199 165 073**
32	25	233	**199 165 024**	**199 165 074**
40	32	267	**199 165 025**	**199 165 075**
50	40	500	**199 165 026**	**199 165 076**
63	50	600	**199 165 027**	**199 165 077**

d (mm)	H4 (mm)	L2 (mm)	L5 (mm)	z (mm)	H2 (mm)	L (mm)	L1 (mm)	H (mm)	H3 (mm)	H1 (mm)	L4 (mm)
20	8	16	40	116	53	148	110	148	22	122	63
25	8	19	40	116	53	154	110	148	22	122	62
32	15	22	45	147	76	190	141	175	31	137	85
40	15	26	45	147	76	198	141	175	31	137	85
50	15	31	45	198	105	254	192	212	42	160	115
63	15	38	45	198	105	268	192	212	42	160	115





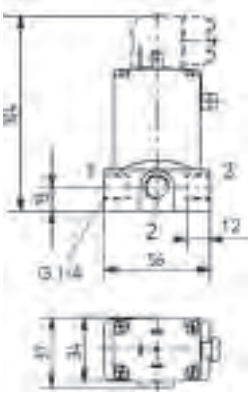

Solenoid valve type 166
Distribution valve 3/2 ways

Model:

- Material: PP-H
- With manual override
- Electrical connection: cable plug
- Protection class IP 65

DN (mm)	D1_G (inch)	Voltage	PN (bar)	kv-value (Δp=1 bar) (l/min)	Function	EPDM Code	FPM Code
4	¼	24V AC/DC	0 - 4	5	F	**199 166 201**	**199 166 206**
4	¼	230V 50Hz ± 10%	0 - 5	5	A	**199 166 011**	**199 166 016**

Variable area flow meters

Variable area flow meter type 335





Variable area flow meter type 335
Float in PVDF without magnet
With solvent cement sockets PVC-U metric

Model:

Scale range (l/h)	d (mm)	DN (mm)	Taper tube in PVC-U transp. O-rings in EPDM Code	Weight (kg)	Taper tube in Polyamid O-rings in EPDM Code	Weight (kg)	Taper tube in Polysulfone O-rings in EPDM Code	Weight (kg)
50 - 500	32	25	**198 335 000**	0.564	**198 335 020**	0.522	**198 335 040**	0.464
100 - 1000	32	25	**198 335 001**	0.473	**198 335 021**	0.423	**198 335 041**	0.528
150 - 1500	40	32	**198 335 002**	0.626	**198 335 022**	0.567	**198 335 042**	0.698
250 - 2500	40	32	**198 335 003**	0.706	**198 335 023**	0.620	**198 335 043**	0.561
200 - 2000	50	40	**198 335 004**	0.972	**198 335 024**	0.885	**198 335 044**	1.057
300 - 3000	50	40	**198 335 005**	0.952	**198 335 025**	0.874	**198 335 045**	1.038
600 - 6000	50	40	**198 335 006**	1.019	**198 335 026**	0.840	**198 335 046**	0.991
600 - 6000	63	50	**198 335 007**	1.357	**198 335 027**	1.381	**198 335 047**	1.307
1000 - 10000	63	50	**198 335 008**	1.299	**198 335 028**	1.196	**198 335 048**	1.252
1500 - 15000	63	50	**198 335 009**	1.301	**198 335 029**	1.355	**198 335 049**	1.302
2000 - 20000	75	65	**198 335 010**	2.513	**198 335 030**	2.536	**198 335 050**	2.639
3000 - 30000	75	65	**198 335 011**	2.442	**198 335 031**	2.286	**198 335 051**	2.572
8000 - 60000	75	65	**198 335 012**	2.293	**198 335 032**	2.333	**198 335 052**	2.432

Scale range (l/h)	D (mm)	L (mm)	L1 (mm)	L2 (mm)	G (inch)
50 - 500	58	385	341	335	1 ½
100 - 1000	58	385	341	335	1 ½
150 - 1500	72	393	341	335	2
250 - 2500	72	393	341	335	2
200 - 2000	83	403	341	335	2 ¼
300 - 3000	83	403	341	335	2 ¼
600 - 6000	83	403	341	335	2 ¼
600 - 6000	101	417	341	335	2 ¾
1000 - 10000	101	417	341	335	2 ¾
1500 - 15000	101	417	341	335	2 ¾
2000 - 20000	135	429	341	335	3 ½
3000 - 30000	135	429	341	335	3 ½
8000 - 60000	135	429	341	335	3 ½





Variable area flow meter type 335
Float in PVDF with magnet
With solvent cement sockets PVC-U metric

Model:

- Suitable limit switches see accessories for variable area flow meters

Scale range (l/h)	d (mm)	DN (mm)	Taper tube in PVC-U transp. O-Rings in EPDM Code	Weight (kg)	Taper tube in Polyamid O-rings in EPDM Code	Weight (kg)	Taper tube in Polysulfone O-rings in EPDM Code	Weight (kg)
50 - 500	32	25	**198 335 100**	0.469	**198 335 120**	0.434	**198 335 140**	0.466
100 - 1000	32	25	**198 335 101**	0.547	**198 335 121**	0.423	**198 335 141**	0.452
150 - 1500	40	32	**198 335 102**	0.630	**198 335 122**	0.568	**198 335 142**	0.604
250 - 2500	40	32	**198 335 103**	0.714	**198 335 123**	0.547	**198 335 143**	0.585
200 - 2000	50	40	**198 335 104**	0.973	**198 335 124**	0.887	**198 335 144**	0.944
300 - 3000	50	40	**198 335 105**	0.952	**198 335 125**	0.874	**198 335 145**	1.035
600 - 6000	50	40	**198 335 106**	1.024	**198 335 126**	0.836	**198 335 146**	0.881
600 - 6000	63	50	**198 335 107**	1.342	**198 335 127**	1.240	**198 335 147**	1.360
1000 - 10000	63	50	**198 335 108**	1.303	**198 335 128**	1.190	**198 335 148**	1.248
1500 - 15000	63	50	**198 335 109**	1.297	**198 335 129**	1.351	**198 335 149**	1.409
2000 - 20000	75	65	**198 335 110**	2.508	**198 335 130**	2.378	**198 335 150**	2.441
3000 - 30000	75	65	**198 335 111**	2.477	**198 335 131**	2.472	**198 335 151**	2.377
8000 - 60000	75	65	**198 335 112**	2.294	**198 335 132**	2.150	**198 335 152**	2.150

Scale range (l/h)	D (mm)	L (mm)	L1 (mm)	L2 (mm)	G (inch)
50 - 500	58	385	341	335	1 ½
100 - 1000	58	385	341	335	1 ½
150 - 1500	72	393	341	335	2
250 - 2500	72	393	341	335	2
200 - 2000	83	403	341	335	2 ¼
300 - 3000	83	403	341	335	2 ¼
600 - 6000	83	403	341	335	2 ¼
600 - 6000	101	417	341	335	2 ¾
1000 - 10000	101	417	341	335	2 ¾
1500 - 15000	101	417	341	335	2 ¾
2000 - 20000	135	429	341	335	3 ½
3000 - 30000	135	429	341	335	3 ½
8000 - 60000	135	429	341	335	3 ½

Variable area flow meter type 350





Variable area flow meter type 350
Float in PVDF without magnet
With solvent cement sockets PVC-U metric

Model:

Scale range (l/h)	d (mm)	DN (mm)	Taper tube in PVC-U transp. O-rings in EPDM Code	Weight (kg)	Taper tube in Polyamid O-rings in EPDM Code	Weight (kg)	Taper tube in Polysulfone O-rings in EPDM Code	Weight (kg)
50 - 500	32	25	**198 350 000**	0.562	**198 350 020**	0.458	**198 350 040**	0.487
100 - 1000	32	25	**198 350 001**	0.551	**198 350 021**	0.524	**198 350 041**	0.474
150 - 1500	40	32	**198 350 002**	0.641	**198 350 022**	0.594	**198 350 042**	0.614
250 - 2500	40	32	**198 350 003**	0.619	**198 350 023**	0.659	**198 350 043**	0.688
200 - 2000	50	40	**198 350 004**	0.992	**198 350 024**	0.953	**198 350 044**	0.962
300 - 3000	50	40	**198 350 005**	0.971	**198 350 025**	0.894	**198 350 045**	0.989
600 - 6000	50	40	**198 350 006**	0.921	**198 350 026**	1.011	**198 350 046**	0.953
600 - 6000	63	50	**198 350 007**	1.446	**198 350 027**	1.401	**198 350 047**	1.335
1000 - 10000	63	50	**198 350 008**	1.472	**198 350 028**	1.416	**198 350 048**	1.343
1500 - 15000	63	50	**198 350 009**	1.327	**198 350 029**	1.239	**198 350 049**	1.315
2000 - 20000	75	65	**198 350 010**	2.576	**198 350 030**	2.150	**198 350 050**	2.486
3000 - 30000	75	65	**198 350 011**	2.497	**198 350 031**	2.500	**198 350 051**	2.150
8000 - 60000	75	65	**198 350 012**	2.341	**198 350 032**	2.352	**198 350 052**	2.244

Scale range (l/h)	D (mm)	L (mm)	L1 (mm)	L2 (mm)	G (inch)
50 - 500	58	400	356	350	1 ½
100 - 1000	58	400	356	350	1 ½
150 - 1500	72	408	356	350	2
250 - 2500	72	408	356	350	2
200 - 2000	83	418	356	350	2 ¼
300 - 3000	83	418	356	350	2 ¼
600 - 6000	83	418	356	350	2 ¼
600 - 6000	101	432	356	350	2 ¾
1000 - 10000	101	432	356	350	2 ¾
1500 - 15000	101	432	356	350	2 ¾
2000 - 20000	135	444	356	350	3 ½
3000 - 30000	135	444	356	350	3 ½
8000 - 60000	135	444	356	350	3 ½





Variable area flow meter type 350
Float in PVDF with magnet
With solvent cement sockets PVC-U metric

Model:

- Suitable limit switches see accessories for variable area flow meters

Scale range (l/h)	d (mm)	DN (mm)	Taper tube in PVC-U transp. O-Rings in EPDM Code	Weight (kg)	Taper tube in Polyamid O-rings in EPDM Code	Weight (kg)	Taper tube in Polysulfone O-rings in EPDM Code	Weight (kg)
50 - 500	32	25	**198 350 100**	0.440	**198 350 120**	0.440	**198 350 140**	0.440
100 - 1000	32	25	**198 350 101**	0.479	**198 350 121**	0.440	**198 350 141**	0.440
150 - 1500	40	32	**198 350 102**	0.643	**198 350 122**	0.575	**198 350 142**	0.615
250 - 2500	40	32	**198 350 103**	0.619	**198 350 123**	0.620	**198 350 143**	0.620
200 - 2000	50	40	**198 350 104**	0.900	**198 350 124**	0.900	**198 350 144**	0.900
300 - 3000	50	40	**198 350 105**	0.970	**198 350 125**	0.900	**198 350 145**	0.900
600 - 6000	50	40	**198 350 106**	0.925	**198 350 126**	0.900	**198 350 146**	0.900
600 - 6000	63	50	**198 350 107**	1.445	**198 350 127**	1.320	**198 350 147**	1.320
1000 - 10000	63	50	**198 350 108**	1.325	**198 350 128**	1.320	**198 350 148**	1.320
1500 - 15000	63	50	**198 350 109**	1.328	**198 350 129**	1.320	**198 350 149**	1.320
2000 - 20000	75	65	**198 350 110**	2.150	**198 350 130**	2.150	**198 350 150**	2.150
3000 - 30000	75	65	**198 350 111**	2.150	**198 350 131**	2.150	**198 350 151**	2.150
8000 - 60000	75	65	**198 350 112**	2.150	**198 350 132**	2.150	**198 350 152**	2.150

Scale range (l/h)	D (mm)	L (mm)	L1 (mm)	L2 (mm)	G (inch)
50 - 500	58	400	356	350	1 ½
100 - 1000	58	400	356	350	1 ½
150 - 1500	72	408	356	350	2
250 - 2500	72	408	356	350	2
200 - 2000	83	418	356	350	2 ¼
300 - 3000	83	418	356	350	2 ¼
600 - 6000	83	418	356	350	2 ¼
600 - 6000	101	432	356	350	2 ¾
1000 - 10000	101	432	356	350	2 ¾
1500 - 15000	101	432	356	350	2 ¾
2000 - 20000	135	444	356	350	3 ½
3000 - 30000	135	444	356	350	3 ½
8000 - 60000	135	444	356	350	3 ½

Short version





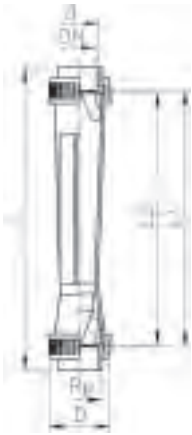

Short version
Float in PVDF with magnet
With solvent cement sockets PVC-U metric

Model:

- Suitable limit switches see accessories for variable area flow meters
- Union nuts and valve ends in other materials on request

Scale range (l/h)	Type	d (mm)	DN (mm)	Taper tube in Polysulfone O-rings in EPDM Code	Weight (kg)	Taper tube in PVC-U transp. O-rings in EPDM Code	Weight (kg)
2.5 - 25.0	SK 500	16	10	**198 801 890**	0.079	**198 803 320**	0.081
5.0 - 50.0	SK 510	16	10	**198 801 891**	0.102	**198 803 321**	0.080
10.0 - 100.0	SK 520	16	10	**198 801 892**	0.075	**198 803 322**	0.079
8.0 - 80.0	SK 600	20	15	**198 801 893**	0.123	**198 803 323**	0.129
15.0 - 150.0	SK 610	20	15	**198 801 894**	0.121	**198 803 324**	0.128
20.0 - 200.0	SK 620	20	15	**198 801 895**	0.119	**198 803 325**	0.125
15.0 - 150.0	SK 700	32	25	**198 801 896**	0.248	**198 803 326**	0.301
30.0 - 300.0	SK 710	32	25	**198 801 897**	0.289	**198 803 327**	0.255
50.0 - 500.0	SK 720	32	25	**198 801 898**	0.241	**198 803 328**	0.248
100.0 - 1000.0	SK 730	32	25	**198 801 899**	0.280	**198 803 329**	0.242

Scale range (l/h)	Type	D (mm)	L (mm)	L1 (mm)	L2 (mm)	G (inch)
2.5 - 25.0	SK 500	35	199	171	165	¾
5.0 - 50.0	SK 510	35	199	171	165	¾
10.0 - 100.0	SK 520	35	199	171	165	¾
8.0 - 80.0	SK 600	43	223	191	185	1
15.0 - 150.0	SK 610	43	223	191	185	1
20.0 - 200.0	SK 620	43	223	191	185	1
15.0 - 150.0	SK 700	60	250	206	200	1 ½
30.0 - 300.0	SK 710	60	250	206	200	1 ½
50.0 - 500.0	SK 720	60	250	206	200	1 ½
100.0 - 1000.0	SK 730	60	250	206	200	1 ½



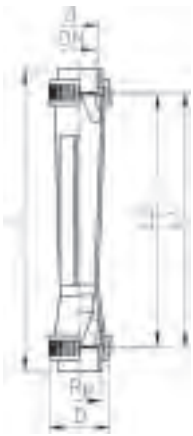

Short version
Float in PVDF without magnet
With solvent cement sockets PVC-U metric

Model:

- Union nuts and valve ends in other materials on request

Scale range (l/h)	Type	d (mm)	DN (mm)	Taper tube in Polysulfone O-rings in EPDM Code	Weight (kg)	Taper tube in PVC-U transp. O-rings in EPDM Code	Weight (kg)
2.5 - 25.0	SK 50	16	10	**198 801 880**	0.083	**198 803 310**	0.081
5.0 - 50.0	SK 51	16	10	**198 801 881**	0.078	**198 803 311**	0.079
10.0 - 100.0	SK 52	16	10	**198 801 882**	0.079	**198 803 312**	0.079
8.0 - 80.0	SK 60	20	15	**198 801 883**	0.125	**198 803 313**	0.127
15.0 - 150.0	SK 61	20	15	**198 801 884**	0.122	**198 803 314**	0.130
20.0 - 200.0	SK 62	20	15	**198 801 885**	0.119	**198 803 315**	0.125
15.0 - 150.0	SK 70	32	25	**198 801 886**	0.247	**198 803 316**	0.256
30.0 - 300.0	SK 71	32	25	**198 801 887**	0.244	**198 803 317**	0.254
50.0 - 500.0	SK 72	32	25	**198 801 888**	0.285	**198 803 318**	0.244
100.0 - 1000.0	SK 73	32	25	**198 801 889**	0.234	**198 803 319**	0.242

Scale range (l/h)	Type	D (mm)	L (mm)	L1 (mm)	L2 (mm)	G (inch)
2.5 - 25.0	SK 50	35	199	171	165	¾
5.0 - 50.0	SK 51	35	199	171	165	¾
10.0 - 100.0	SK 52	35	199	171	165	¾
8.0 - 80.0	SK 60	43	223	191	185	1
15.0 - 150.0	SK 61	43	223	191	185	1
20.0 - 200.0	SK 62	43	223	191	185	1
15.0 - 150.0	SK 70	60	250	206	200	1 ½
30.0 - 300.0	SK 71	60	250	206	200	1 ½
50.0 - 500.0	SK 72	60	250	206	200	1 ½
100.0 - 1000.0	SK 73	60	250	206	200	1 ½

Special scale for type 335/350

Special scale for type 335/350
l/h

d (mm)	DN (mm)	Scale range (l/h)	Code	Weight (kg)
32	25	50 - 500	**198 335 861**	0.050
32	25	100 - 1000	**198 335 862**	0.050
40	32	150 - 1500	**198 335 863**	0.050
40	32	250 - 2500	**198 335 864**	0.050
50	40	200 - 2000	**198 335 865**	0.050
50	40	300 - 3000	**198 335 866**	0.050
50	40	600 - 6000	**198 335 867**	0.050
63	50	600 - 6000	**198 335 868**	0.050
63	50	1000 - 10000	**198 335 869**	0.050
63	50	1500 - 15000	**198 335 870**	0.050
75	65	2000 - 20000	**198 335 871**	0.050
75	65	3000 - 30000	**198 335 872**	0.050
75	65	8000 - 60000	**198 335 873**	0.050

Special scale for type 335/350
% for H2O

d (mm)	DN (mm)	Scale range (l/h)	Corresponds to water scale (l/h)	Code	Weight (kg)
32	25	10-100 %	50-500	**198 335 084**	0.050
32	25	10-100 %	100-1000	**198 335 083**	0.003
40	32	10-100 %	150-1500	**198 335 069**	0.050
40	32	10-100 %	250-2500	**198 335 068**	0.050
50	40	10-100 %	200-2000	**198 335 054**	0.050
50	40	10-100 %	300-3000	**198 335 053**	0.002
50	40	10-100 %	600-6000	**198 335 039**	0.050
63	50	10-100 %	600-6000	**198 335 038**	0.002
63	50	10-100 %	1000-10000	**198 335 037**	0.002
63	50	10-100 %	1500-15000	**198 335 036**	0.050
75	65	10-100 %	2000-20000	**198 335 035**	0.050
75	65	10-100 %	3000-30000	**198 335 034**	0.050
75	65	13.3-100 %	8000-60000	**198 335 033**	0.050

Special scale for type 335/350
m3/h

d (mm)	DN (mm)	Scale range (m^3/h)	Corresponds to water scale (l/h)	Code	Weight (kg)
32	25	0.05 - 0.50	50 - 500	**198 335 655**	0.050
32	25	0.10 - 1.00	100 - 1000	**198 335 656**	0.050
40	32	0.15 - 1.50	150 - 1500	**198 335 657**	0.050
40	32	0.25 - 2.50	250 - 2500	**198 335 658**	0.050
50	40	0.20 - 2.00	200 - 2000	**198 335 659**	0.050
50	40	0.30 - 3.00	300 - 3000	**198 335 660**	0.050
50	40	0.60 - 6.00	600 - 6000	**198 335 661**	0.050
63	50	0.60 - 6.00	600 - 6000	**198 335 662**	0.050
63	50	1.00 - 10.00	1000 - 10000	**198 335 663**	0.050
63	50	1.50 - 15.00	1500 - 15000	**198 335 664**	0.050
75	65	2.00 - 20.00	2000 - 20000	**198 335 665**	0.050
75	65	3.00 - 30.00	3000 - 30000	**198 335 666**	0.008
75	65	8.00 - 60.00	8000 - 60000	**198 335 667**	0.050

Special scale for type 335/350
Imp. GPM

d (mm)	DN (mm)	Scale range (gal/min)	Corresponds to water scale (l/h)	Code	Weight (kg)
32	25	0.183 - 1.830	50-500	**198 335 670**	0.050
32	25	0.366 - 3.660	100-1000	**198 335 671**	0.050
40	32	0.550 - 5.500	150-1500	**198 335 672**	0.050
40	32	0.916 - 9.160	250-2500	**198 335 673**	0.050
50	40	0.733 - 7.330	200-2000	**198 335 674**	0.050
50	40	1.090 - 10.900	300-3000	**198 335 675**	0.050
50	40	2.190 - 21.900	600-6000	**198 335 676**	0.050
63	50	2.200 - 22.000	600-6000	**198 335 677**	0.050
63	50	3.660 - 36.600	1000-10000	**198 335 678**	0.050
63	50	5.490 - 54.900	1500-15000	**198 335 679**	0.050
75	65	7.320 - 73.200	2000-20000	**198 335 680**	0.050
75	65	10.980 - 109.800	3000-30000	**198 335 681**	0.050
75	65	29.280 - 219.600	8000-60000	**198 335 682**	0.050

Special scale for type 335/350
US GPM

d (mm)	DN (mm)	Scale range (gal/min)	Corresponds to water scale (l/h)	Code	Weight (kg)
32	25	0.22 - 2.20	50 - 500	**198 335 685**	0.050
32	25	0.44 - 4.40	100 - 1000	**198 335 686**	0.050
40	32	0.66 - 6.60	150 - 1500	**198 335 687**	0.002
40	32	1.10 - 11.00	250 - 2500	**198 335 688**	0.050
50	40	0.88 - 8.80	200 - 2000	**198 335 689**	0.002
50	40	1.32 - 13.20	300 - 3000	**198 335 690**	0.050
50	40	2.64 - 26.40	600 - 6000	**198 335 691**	0.002
63	50	2.64 - 26.40	600 - 6000	**198 335 692**	0.050
63	50	4.40 - 44.02	1000 - 10000	**198 335 693**	0.002
63	50	6.60 - 66.04	1500 - 15000	**198 335 694**	0.050
75	65	8.80 - 88.00	2000 - 20000	**198 335 695**	0.002
75	65	13.20 - 132.00	3000 - 30000	**198 335 696**	0.002
75	65	35.20 - 264.00	8000 - 60000	**198 335 697**	0.050

Special scale for type 335/350
Air/0bar/Nm3/h

d (mm)	DN (mm)	Scale range (m^3/h)	Corresponds to water scale (l/h)	Code	Weight (kg)
32	25	1.5 - 14.0	50 - 500	**198 350 655**	0.002
32	25	2.5 - 29.0	100 - 1000	**198 350 656**	0.050
40	32	4.0 - 45.0	150 - 1500	**198 350 657**	0.050
40	32	7.0 - 79.0	250 - 2500	**198 350 658**	0.050
50	40	6.0 - 58.0	200 - 2000	**198 350 659**	0.050
50	40	9.0 - 108.0	300 - 3000	**198 350 660**	0.002
50	40	17.0 - 174.0	600 - 6000	**198 350 661**	0.050
63	50	17.0 - 175.0	600 - 6000	**198 350 662**	0.050
63	50	29.0 - 301.0	1000 - 10000	**198 350 663**	0.050
63	50	53.0 - 405.0	1500 - 15000	**198 350 664**	0.050
75	65	55.0 - 545.0	2000 - 20000	**198 350 665**	0.050
75	65	80.0 - 758.0	3000 - 30000	**198 350 666**	0.050
75	65	140.0 - 840.0	8000 - 60000	**198 350 667**	0.050

Special scale for type 335/350
HCl 30-33% l/h

d (mm)	DN (mm)	Scale range (l/h)	Corresponds to water scale (l/h)	Code	Weight (kg)
32	25	20 - 405	50-500	**198 350 670**	0.050
32	25	55 - 866	100-1000	**198 350 671**	0.002
40	32	90 - 1340	150-1500	**198 350 672**	0.050
40	32	165 - 2310	250-2500	**198 350 673**	0.050
50	40	115 - 1660	200-2000	**198 350 674**	0.050
50	40	190 - 3050	300-3000	**198 350 675**	0.050
50	40	420 - 4900	600-6000	**198 350 676**	0.010
63	50	430 - 5090	600-6000	**198 350 677**	0.050
63	50	750 - 9460	1000-10000	**198 350 678**	0.050
63	50	1415 - 11570	1500-15000	**198 350 679**	0.050
75	65	1500 - 17300	2000-20000	**198 350 680**	0.050
75	65	2175 - 24120	3000-30000	**198 350 681**	0.050
75	65	5000 - 58000	8000-60000	**198 350 682**	0.050

Special scale for type 335/350
NaOH 30% l/h

d (mm)	DN (mm)	Scale range (l/h)	Corresponds to water scale (l/h)	Code	Weight (kg)
32	25	4 - 226	50-500	**198 350 685**	0.050
32	25	15 - 600	100-1000	**198 350 686**	0.050
40	32	30 - 970	150-1500	**198 350 687**	0.050
40	32	70 - 1800	250-2500	**198 350 688**	0.050
50	40	35 - 1240	200-2000	**198 350 689**	0.002
50	40	75 - 2370	300-3000	**198 350 690**	0.050
50	40	230 - 4000	600-6000	**198 350 691**	0.050
63	50	240 - 4700	600-6000	**198 350 692**	0.050
63	50	475 - 7340	1000-10000	**198 350 693**	0.050
63	50	1030 - 10330	1500-15000	**198 350 694**	0.050
75	65	915 - 11720	2000-20000	**198 350 695**	0.050
75	65	1195 - 16040	3000-30000	**198 350 696**	0.050
75	65	300 - 34000	8000-60000	**198 350 697**	0.050

Special scale for type 335/350
NaOH 50% l/h

d (mm)	DN (mm)	Scale range (l/h)	Corresponds to water scale (l/h)	Code	Weight (kg)
32	25	1 - 55	50-500	**198 350 755**	0.050
32	25	3 - 192	100-1000	**198 350 756**	0.050
40	32	6 - 365	150-1500	**198 350 757**	0.050
40	32	15 - 770	250-2500	**198 350 758**	0.050
50	40	8 - 520	200-2000	**198 350 759**	0.050
50	40	15 - 1170	300-3000	**198 350 760**	0.050
50	40	50 - 2270	600-6000	**198 350 761**	0.002
63	50	55 - 2300	600-6000	**198 350 762**	0.050
63	50	140 - 4340	1000-10000	**198 350 763**	0.050
63	50	420 - 5820	1500-15000	**198 350 764**	0.050
75	65	245 - 7590	2000-20000	**198 350 765**	0.050
75	65	400 - 11120	3000-30000	**198 350 766**	0.050
75	65	1700 - 13000	8000-60000	**198 350 767**	0.050

Special scale for short version

Special scale for short version
Water l/h

Type	Scale range (l/h)	Code
SK 50 / 500	2.5 - 25.0	**198 801 386**
SK 51 / 510	5.0 - 50.0	**198 801 387**
SK 52 / 520	10.0 - 100.0	**198 801 388**
SK 60 / 600	8.0 - 80.0	**198 801 389**
SK 61 / 610	15.0 - 150.0	**198 801 390**
SK 62 / 620	20.0 - 200.0	**198 801 391**
SK 70 / 700	15.0 - 150.0	**198 801 392**
SK 71 / 710	30.0 - 30.0	**198 801 393**
SK 72 / 720	50.0 - 500.0	**198 801 394**
SK 73 / 730	100.0 - 1000.0	**198 801 395**

Special scale for short version
US GPM

Type	Scale range (gal/min)	Code
SK 50 / 500	0.01 - 0.11	**198 801 961**
SK 51 / 510	0.02 - 0.22	**198 801 962**
SK 52 / 520	0.04 - 0.44	**198 801 963**
SK 60 / 600	0.03 - 0.35	**198 801 964**
SK 61 / 610	0.06 - 0.66	**198 801 965**
SK 62 / 620	0.08 - 0.88	**198 801 966**
SK 70 / 700	0.06 - 0.66	**198 801 967**
SK 71 / 710	0.13 - 1.32	**198 801 968**
SK 72 / 720	0.22 - 2.20	**198 801 969**
SK 73 / 730	0.44 - 4.40	**198 801 970**

Special scale for short version
Air/0bar/Nm3/h

Type	Scale range (m^3/h)	Code
SK 50 / 500	0.50 - 0.95	**198 801 308**
SK 51 / 510	0.50 - 1.90	**198 801 309**
SK 52 / 520	0.80 - 3.00	**198 801 310**
SK 60 / 600	0.60 - 2.80	**198 801 311**
SK 61 / 610	1.40 - 5.60	**198 801 312**
SK 62 / 620	1.50 - 7.00	**198 801 313**
SK 70 / 700	1.00 - 6.50	**198 801 314**
SK 71 / 710	1.50 - 11.00	**198 801 315**
SK 72 / 720	3.00 - 18.00	**198 801 316**
SK 73 / 730	6.00 - 30.00	**198 801 317**

Special scale for short version
HCl 30 - 33% l/h

Type	Scale range (l/h)	Code
SK 50 / 500	2.5 - 20.0	**198 806 511**
SK 51 / 510	5.0 - 40.0	**198 806 512**
SK 52 / 520	10.0 - 85.0	**198 806 513**
SK 60 / 600	8.0 - 70.0	**198 806 514**
SK 61 / 610	15.0 - 125.0	**198 806 515**
SK 62 / 620	20.0 - 170.0	**198 806 516**
SK 70 / 700	5.0 - 125.0	**198 806 517**
SK 71 / 710	30.0 - 260.0	**198 806 518**
SK 72 / 720	50.0 - 425.0	**198 806 519**
SK 73 / 730	100.0 - 850.0	**198 806 520**

Special scale for short version
NaOH 30% l/h

Type	Scale range (l/h)	Code
SK 50 / 500	0.2 - 5.0	**198 806 521**
SK 51 / 510	1.0 - 14.0	**198 806 522**
SK 52 / 520	3.0 - 35.0	**198 806 523**
SK 60 / 600	2.0 - 23.0	**198 806 524**
SK 61 / 610	3.0 - 55.0	**198 806 525**
SK 62 / 620	5.0 - 80.0	**198 806 526**
SK 70 / 700	3.0 - 55.0	**198 806 527**
SK 71 / 710	6.0 - 130.0	**198 806 528**
SK 72 / 720	10.0 - 250.0	**198 806 529**
SK 73 / 730	40.0 - 590.0	**198 806 530**

Special scale for short version
NaOH 50% l/h

Type	Scale range (l/h)	Code
SK 60 / 600	0.2 - 3.5	**198 806 531**
SK 61 / 610	0.5 - 10.0	**198 806 532**
SK 62 / 620	0.5 - 16.0	**198 806 533**
SK 70 / 700	0.5 - 11.0	**198 806 534**
SK 71 / 710	1.0 - 33.0	**198 806 535**
SK 72 / 720	2.0 - 80.0	**198 806 536**
SK 73 / 730	10.0 - 220.0	**198 806 537**

Accessories





Accessories
Limit contacts GK10/GK11
For type 335/350 and short version

Type	Code	Weight (kg)
GK10 (min.)	**198 335 960**	0.035
GK11 (max.)	**198 335 961**	0.034



Accessories
4-20 mA sensor
For type 335 and type 350

Type	d (mm)	DN (mm)	Corresponds to water scale (l/h)	Code	Weight (kg)
GK 15	32	25	50-500	**198 335 962**	0.150
GK 15	32	25	100-1000	**198 335 963**	0.150
GK 15	40	32	150-1500	**198 335 964**	0.150
GK 15	40	32	250-2500	**198 335 965**	0.150
GK 15	50	40	200-2000	**198 335 966**	0.150
GK 15	50	40	300-3000	**198 335 967**	0.150
GK 15	50	40	600-6000	**198 335 968**	0.150
GK 15	63	50	600-6000	**198 335 969**	0.150
GK 15	63	50	1000-10000	**198 335 991**	0.150
GK 15	63	50	1500-15000	**198 335 992**	0.120
GK 15	75	65	2000-20000	**198 335 993**	0.150
GK 15	75	65	3000-30000	**198 335 994**	0.150
GK 15	75	65	8000-60000	**198 335 995**	0.150

Strainers



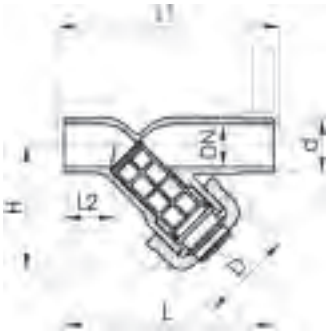

Line strainer type 305 PVC-U
With solvent cement spigots metric

Model:

- Protects valves, pumps, etc. from becoming soiled
- Easy dismantling for cleaning the screens
- **Screen perforation need be ordered separately**
- Overall length according to EN 558

d (mm)	DN (mm)	PN (bar)	EPDM Code	Weight (kg)	FPM Code	Weight (kg)
20	15	10	**161 305 300**	0.101	**161 305 349**	0.134
25	20	10	**161 305 350**	0.141	**161 305 399**	0.215
32	25	10	**161 305 400**	0.226	**161 305 449**	0.257
40	32	10	**161 305 450**	0.348	**161 305 499**	0.386
50	40	10	**161 305 500**	0.600	**161 305 549**	0.632
63	50	10	**161 305 550**	0.985	**161 305 599**	1.045
75	65	10	**161 305 600**	1.868	**161 305 649**	1.871
90	80	10	**161 305 650**	2.590	**161 305 699**	2.585

d (mm)	D (mm)	H (mm)	L (mm)	L1 (mm)	L2 (mm)	closest inch (inch)
20	43	65	124	130	28	½
25	47	76	144	150	37	¾
32	56	90	154	160	37	1
40	64	104	174	180	44	1 ¼
50	82	124	194	200	48	1 ½
63	95	148	224	230	60	2
75	106	188	284	290	74	2 ½
90	120	205	300	310	85	3



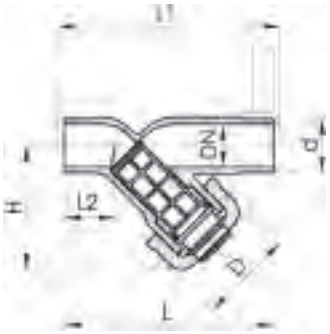

Line strainer type 305 PVC-U
Transparent body with solvent cement spigots metric

Model:

- Protects valves, pumps, etc. from becoming soiled
- Easy dismantling for cleaning the screens
- **Screen perforation need be ordered separately**
- Overall length according to EN 558

d (mm)	DN (mm)	PN (bar)	EPDM Code	Weight (kg)	FPM Code	Weight (kg)
20	15	10	**192 305 300**	0.098	**192 305 349**	0.100
25	20	10	**192 305 350**	0.143	**192 305 399**	0.170
32	25	10	**192 305 400**	0.227	**192 305 449**	0.227
40	32	10	**192 305 450**	0.342	**192 305 499**	0.346
50	40	10	**192 305 500**	0.589	**192 305 549**	0.594
63	50	10	**192 305 550**	0.968	**192 305 599**	0.972
75	65	10	**192 305 600**	1.826	**192 305 649**	1.838
90	80	10	**192 305 650**	2.548	**192 305 699**	2.565

d (mm)	D (mm)	H (mm)	L (mm)	L1 (mm)	L2 (mm)	closest inch (inch)
20	43	65	124	130	28	½
25	47	76	144	150	37	¾
32	56	90	154	160	37	1
40	64	104	174	180	44	1 ¼
50	82	124	194	200	48	1 ½
63	95	148	224	230	60	2
75	106	188	284	290	74	2 ½
90	120	205	300	310	85	3



Cylindrical screen type 305 PVC-U
Screen perforations 2.2 mm

- For line strainers Type 305

d (mm)	DN (mm)	kv-value (Δp=1 bar) (l/min)	Code	Weight (kg)	D (mm)	L (mm)	closest inch (inch)
20	15	35	**161 305 336**	0.005	14	39	½
25	20	65	**161 305 386**	0.003	18	48	¾
32	25	90	**161 305 436**	0.003	24	60	1
40	32	155	**161 305 486**	0.003	30	71	1 ¼
50	40	225	**161 305 536**	0.005	38	87	1 ½
63	50	370	**161 305 586**	0.008	48	106	2
75	65	575	**161 305 636**	0.009	61	100	2 ½
90	80	955	**161 305 686**	0.013	73	118	3



Cylindrical screen type 305 PVC-U
Screen perforations 1.4 mm

- For line strainers Type 305

d (mm)	DN (mm)	kv-value (Δp=1 bar) (l/min)	Code	Weight (kg)	D (mm)	L (mm)	closest inch (inch)
20	15	35	**161 305 337**	0.003	14	39	½
25	20	65	**161 305 387**	0.003	18	48	¾
32	25	90	**161 305 437**	0.003	24	60	1
40	32	155	**161 305 487**	0.004	30	71	1 ¼
50	40	225	**161 305 537**	0.005	38	87	1 ½
63	50	370	**161 305 587**	0.008	48	106	2
75	65	575	**161 305 637**	0.011	61	100	2 ½
90	80	955	**161 305 687**	0.013	73	118	3



Cylindrical screen type 305 PVC-U
Screen perforations 0.8 mm

- For line strainers Type 305

d (mm)	DN (mm)	kv-value (Δp=1 bar) (l/min)	Code	Weight (kg)	D (mm)	L (mm)	closest inch (inch)
20	15	35	**161 305 338**	0.005	14	39	½
25	20	65	**161 305 388**	0.007	18	48	¾
32	25	90	**161 305 438**	0.003	24	60	1
40	32	155	**161 305 488**	0.004	30	71	1 ¼
50	40	225	**161 305 538**	0.006	38	87	1 ½
63	50	370	**161 305 588**	0.003	48	106	2
75	65	575	**161 305 638**	0.012	61	100	2 ½
90	80	955	**161 305 688**	0.015	73	118	3



Cylindrical screen type 305 PVC-U
Screen perforations 0.5 mm

- For line strainers Type 305

d (mm)	Size (inch)	DN (mm)	kv-value (Δp=1 bar) (l/min)	Code	Weight (kg)	D (mm)	L (mm)
20	½	15	35	**161 305 339**	0.005	14	39
25	¾	20	65	**161 305 389**	0.007	18	48
32	1	25	90	**161 305 439**	0.003	24	60
40	1 ¼	32	155	**161 305 489**	0.004	30	71
50	1 ½	40	225	**161 305 539**	0.007	38	87
63	2	50	370	**161 305 589**	0.009	48	106
75	2 ½	65	575	**161 305 639**	0.012	61	100
90	3	80	955	**161 305 689**	0.016	73	118

Screen assemblies and Inspection glass





Screen assembly type 050 PVC-U
With solvent cement sockets metric

d (mm)	Size (inch)	DN (mm)	kv-value (Δp=1 bar) (l/min)	Code	Weight (kg)	D (mm)	L (mm)	L1 (mm)	perforations ø (mm)
20	½	15	105	**161 050 026**	0.035	50	80	64	2
25	¾	20	228	**161 050 027**	0.039	50	83	64	2
32	1	25	390	**161 050 028**	0.046	50	86	64	2
40	1 ¼	32	563	**161 050 029**	0.147	90	131	105	2
50	1 ½	40	813	**161 050 030**	0.172	90	136	105	2
63	2	50	1590	**161 050 031**	0.192	90	143	105	2



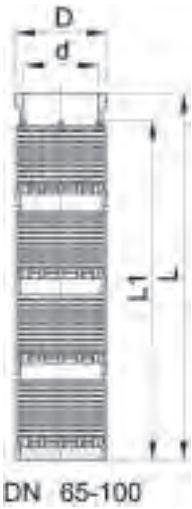

Screen assembly type 050 PVC-U
With solvent cement sockets metric

Model:

- [1] Screen with 1 extension and end plate, solvent cemented
- [2] Screen with 2 extensions and end plate, solvent cemented
- [3] Screen with 3 extensions and end plate, solvent cemented

	d (mm)	DN (mm)	kv-value (Δp=1 bar) (l/min)	Code	Weight (kg)	D (mm)	L (mm)	L1 (mm)	closest inch (inch)	lamina width (mm)
*	75	65	9640	**161 050 032**	0.837	110	260	216	2 ½	3
*	90	80	14790	**161 050 033**	0.944	110	345	312	3	3
*	110	100	15213	**161 050 034**	1.338	125	490	460	4	3





Inspection glass type 001 PVC-U

Model:

- For visual inspection of the medium in the pipeline
- For horizontal or vertical installation

d (mm)	DN (mm)	PN (bar)	EPDM Code	Weight (kg)	D (mm)	D1 (mm)	L (mm)	z (mm)	closest inch (inch)
50	40	10	**199 001 240**	0.567	83	29	150	178	1 ½

Pipe clips





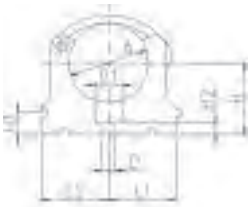



KLIP-IT pipe clip type 061 PP metric

Model:

- Material: clip and safety clip PP black, UV resistant
- d16 - d63: height designed for ball valve type 546 and 543
- **Minimum order quantity: standard packagings SP**

	d (mm)	d (inch)	Code	Weight (kg)
*	10		**167 061 003**	0.003
*	12		**167 061 004**	0.003
*	16		**167 061 035**	0.007
*	20		**167 061 036**	0.007
*	25		**167 061 037**	0.009
*	32		**167 061 038**	0.012
	40		**167 061 039**	0.027
	50		**167 061 040**	0.031
	63		**167 061 041**	0.052
	75	2 ½	**167 061 012**	0.057
	90	3	**167 061 013**	0.092
	110	4	**167 061 014**	0.117
	125		**167 061 015**	0.180
	140	5	**167 061 016**	0.224
	160		**167 061 017**	0.242

	d (mm)	D (mm)	D1 (mm)	H (mm)	H1 (mm)	H2 (mm)	H3 (mm)	L1 (mm)	L2 (mm)	SC	closest inch (inch)
*	10	5	8	20	10	6	12	11	14	M4	⅛
*	12	5	8	21	10	6	12	11	14	M5	¼
*	16	6	11	27	10	6	16	14	17	M5	⅜
*	20	6	11	27	10	6	16	17	19	M5	½
*	25	6	11	30	10	6	16	19	22	M5	¾
*	32	6	11	36	10	6	16	24	27	M5	1
	40	7	14	44	10	7	22	34	34	M6	1 ¼
	50	7	14	51	10	7	22	37	37	M6	1 ½
	63	9	17	64	10	10	25	45	45	M8	2
	75	9	17	58	10	10	25	52	52	M8	2 ½
	90	9	17	65	10	10	28	65	65	M8	3
	110	9	17	75	10	10	28	79	79	M8	4
	125	9	17	90	10	10	32	88	88	M8	
	140	9	17	110	10	10	32	98	98	M8	5
	160	9	17	108	10	10	32	109	109	M8	6



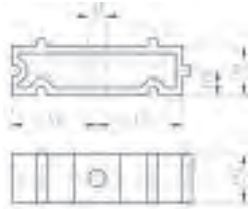

KLIP-IT spacer type 061 PP

Model:

- For pipe clips type 061/061H, PP black, UV resistant
- **Minimum order quantity: standard packaging SP**

d (mm)	Inch (inch)	Code	Weight (kg)	D (mm)	L1 (mm)	L2 (mm)	H (mm)	H1 (mm)	H2 (mm)	SC
10 - 12	⅛ - ¼	**167 061 153**	0.003	5	11	14	20	10	12	M4
16	⅜	**167 061 155**	0.005	6	14	17	20	10	16	M5
20	½	**167 061 156**	0.005	6	17	19	20	10	16	M5
25	¾	**167 061 157**	0.007	6	19	22	20	10	16	M5
32	1	**167 061 158**	0.006	6	24	27	20	10	16	M5
40	1 ¼	**167 061 159**	0.015	7	34	34	20	10	22	M6
50	1 ½	**167 061 160**	0.017	7	37	37	20	10	22	M6
63	2	**167 061 161**	0.020	9	45	45	20	10	25	M8

table continued on the next page

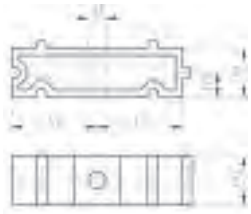

d (mm)	Inch (inch)	Code	Weight (kg)	D (mm)	L1 (mm)	L2 (mm)	H (mm)	H1 (mm)	H2 (mm)	SC
75	2 ½	**167 061 162**	0.027	9	52	52	20	10	25	M8
90	3	**167 061 163**	0.039	9	65	65	20	10	28	M8
110	4	**167 061 164**	0.048	9	79	79	20	10	28	M8
125	4 ½	**167 061 165**	0.059	9	88	88	20	10	32	M8
140	5	**167 061 166**	0.065	9	98	98	20	10	32	M8
160	6	**167 061 167**	0.071	9	109	109	20	10	32	M8





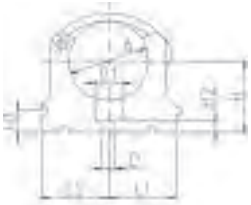



KLIP-IT pipe clip type 061 PE metric

Model:

- Material: clip PE and safety clip PP black, bolts galvanized
- **Minimum order quantity: standard packaging SP**
- Height not designed for ball valve 546 and 543. Please use spacer 73 06 11.

	d (mm)	Code	Weight (kg)	D (mm)	D1 (mm)	L1 (mm)	L2 (mm)	H (mm)	H1 (mm)	H2 (mm)	H3 (mm)	SC
*	10	**173 061 003**	0.003	5	8	11	14	20	10	6	12	M4
*	12	**173 061 004**	0.006	5	8	11	14	21	10	6	12	M5
*	16	**173 061 005**	0.006	6	11	14	17	23	10	6	16	M5
*	20	**173 061 006**	0.007	6	11	17	19	25	10	6	16	M5
*	25	**173 061 007**	0.009	6	11	19	22	28	10	6	16	M5
*	32	**173 061 008**	0.011	6	11	24	27	31	10	6	16	M5
	40	**173 061 009**	0.026	7	14	34	34	35	10	7	22	M6
	50	**173 061 010**	0.028	7	14	37	37	40	10	7	22	M6
	63	**173 061 011**	0.047	9	17	45	45	52	10	10	25	M8
	75	**173 061 012**	0.061	9	17	52	52	58	10	10	25	M8
	90	**173 061 013**	0.098	9	17	65	65	65	10	10	28	M8
	110	**173 061 014**	0.125	9	17	79	79	75	10	10	28	M8
	125	**173 061 015**	0.194	9	17	88	88	90	10	10	32	M8
	140	**173 061 016**	0.243	9	17	98	98	110	10	10	32	M8
	160	**173 061 017**	0.254	9	17	109	109	108	10	10	32	M8



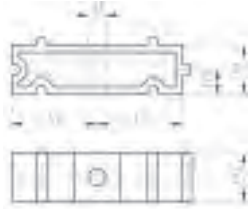

KLIP-IT spacer type 061 PE

Model:

- **Minimum order quantity: standard packaging SP**
- For pipe clips type 061, PE black, UV resistant

d (mm)	Inch (inch)	Code	Weight (kg)	D (mm)	L1 (mm)	L2 (mm)	H (mm)	H1 (mm)	H2 (mm)	SC
	1/8-1/4	**173 061 153**	0.003	5	11	14	20	10	12	M4
16	3/8	**173 061 155**	0.005	6	14	17	20	10	16	M5
20	1/2	**173 061 156**	0.005	6	17	19	20	10	16	M5
25	3/4	**173 061 157**	0.006	6	19	22	20	10	16	M5
32	1	**173 061 158**	0.008	6	24	27	20	10	16	M5
40	11/4	**173 061 159**	0.016	7	34	34	20	10	22	M6
50	11/2	**173 061 160**	0.017	7	37	37	20	10	22	M6
63	2	**173 061 161**	0.025	9	45	45	20	10	25	M8
75	21/2	**173 061 162**	0.027	9	52	52	20	10	25	M8
90	3	**173 061 163**	0.040	9	65	65	20	10	28	M8
110	4	**173 061 164**	0.050	9	79	79	20	10	28	M8
125	41/2	**173 061 165**	0.059	9	88	88	20	10	32	M8
140	5	**173 061 166**	0.065	9	98	98	20	10	32	M8
160	6	**173 061 167**	0.078	9	109	109	20	10	32	M8



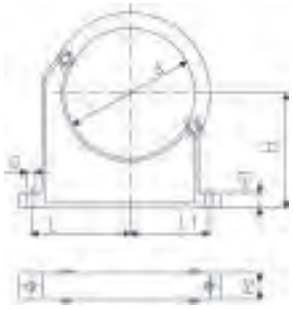

Pipe clip type 060 PP metric

Model:

- Material: clip and safety clip PP black, UV resistant
- **Minimum order quantity: standard packaging SP or gross packaging GP**
- Accidental opening of the safety clip is not possible
- Clip and safety clip are not assembled in the packaging.
- Pipes with flanges can be installed directly

d (mm)	Code	Weight (kg)	D (mm)	L (mm)	L1 (mm)	H (mm)	H1 (mm)	H2 (mm)	SC	closest inch (inch)
90	**167 060 038**	0.144	9	89	71	105	15	33	M 8	3
110	**167 060 039**	0.158	9	94	80	115	15	33	M 8	4
125	**167 060 040**	0.249	11	116	91	130	20	35	M10	
140	**167 060 041**	0.260	11	121	98	130	20	35	M10	5
160	**167 060 042**	0.296	11	131	107	148	20	35	M10	6
180	**167 060 043**	0.327	11	143	115	163	20	35	M10	7
200	**167 060 019**	0.539	13	152	120	175	25	39	M12	8
225	**167 060 020**	0.178	13	165	132	175	25	39	M12	8
250	**167 060 021**	0.657	13	183	143	200	25	39	M12	9
280	**167 060 022**	0.212	13	198	156	200	25	39	M12	10
315	**167 060 023**	0.805	13	219	172	225	25	39	M12	12
355	**167 060 024**	1.251	17	275	209	258	30	50	M16	14
400	**167 060 025**	1.031	17	300	228	288	30	50	M16	16







Wall mounting bracket brass/PVC-U Metric/Rp

Model:

- Brass, with parallel female thread Rp and PVC-U solvent socket insert metric

	d (mm)	Rp (inch)	PN (bar)	Code	Weight (kg)	z1 (mm)	z2 (mm)	D (mm)	L (mm)	L1 (mm)	L2 (mm)	L3 (mm)
#	16	⅜	16	**160 100 250**	0.252	21	9	5	14	6	19	18
	20	½	16	**160 100 300**	0.278	22	9	5	16	6	19	18
	25	¾	16	**160 100 350**	0.258	25	11	5	17	5	24	23



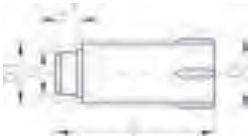

Wall inlet plug PVC-U

Model:

- Gasket: flat gasket code No. 748 400 001, EPDM
- Use: for all fittings with parallel female thread in accordance with ISO 7
- The wall inlet plug has a parallel male thread G

G (inch)	Code	Weight (kg)	D (mm)	D1 (mm)	L (mm)	L1 (mm)
½	**799 150 003**	0.044	39	32	87	11





Flat gasket

Model:

- Hardness: EPDM ca. 70° shore
- For wall inlet plugs

G (inch)	EPDM Code	Weight (kg)	D (mm)	D1 (mm)	H (mm)
½	**748 400 001**	0.002	28	22	3

PVC-U BS / JIS		Page
	Pipes	287
	Fittings	289
	Adaptor fittings	295
	Unions	299
	Flange adaptors and flanges	305
	Installation fittings	306
	Ball valves type 546	308
	Ball valves electric type 107	317
	Ball valves electric type 183	321
	Ball valves electric type 184	323
	Ball valves electric type 104	327
	Ball valves pneumatic	329
	3-Way ball valves type 543	356
	3-Way ball valves electric type 167	366
	3-Way ball valves electric type 170	367
	3-Way ball valves pneumatic	369
	Metering ball valves type 523	376

PVC-U BS / JIS		Page
	Laboratory ball valves type 322	377
	Diaphragm valves	378
	Diaphragm valves pneumatic	382
	Pressure regulating valves	401
	Process control valves	407
	Cone check valves	410
	Angle seat valves	414
	Strainers	416
	Screen assemblies	417

Pipes



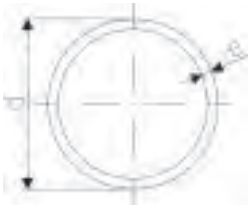

Pipe PVC-U grey class E 15 bar at 20°C

- Material: PVC-U, Polyvinylchloride unplasticised
- Dimensions: BS EN 1452 Part 1 & 2 (formerly BS 3505)
- Pipe length: 6m with plain ends
- Minimum order quantity: 1 length

PN (bar)	Size (NB) (inch)	Code	Weight (kg/m)	e (mm)	di (mm)	d (mm)
15	⅜	**161 018 080**	0.114	1.5	14.1	17.1
15	½	**161 018 082**	0.161	1.7	17.9	21.3
15	¾	**161 018 083**	0.225	1.9	22.9	26.7
15	1	**161 018 084**	0.325	2.2	29.0	33.4
15	1 ¼	**161 018 085**	0.503	2.7	36.8	42.2
15	1 ½	**161 018 086**	0.659	3.1	42.1	48.3
15	2	**161 018 087**	1.038	3.9	52.5	60.3
16	2 ½	**161 017 112**	1.820	5.6	58.2	75.0
15	3	**161 018 088**	2.245	5.7	77.5	88.9
15	4	**161 018 089**	3.667	7.3	99.7	114.3
16	5	**161 017 116**	6.215	10.3	119.4	140.0



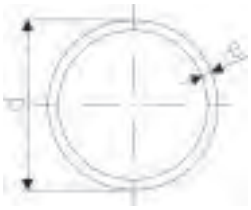

Pipe PVC-U grey class D 12 bar at 20°C

- Material: PVC-U, Polyvinylchloride unplasticised
- Dimensions: BS EN 1452 Part 1 & 2 (formerly BS 3505)
- Pipe length: 6m with plain ends
- Minimum order quantity: 1 length

Size (NB) (inch)	PN (bar)	Code	Weight (kg/m)	e (mm)	di (mm)	d (mm)
1 ¼	12	**161 018 059**	0.420	2.2	37.8	42.2
1 ½	12	**161 018 060**	0.550	2.5	43.3	48.3
2	12	**161 018 061**	0.900	3.1	54.1	60.3
3	12	**161 018 063**	1.930	4.6	79.7	88.9
4	12	**161 018 064**	3.230	6.0	102.3	114.3



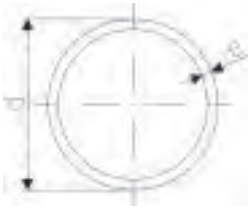

Pipe PVC-U grey class C 9 bar at 20°C

- Material: PVC-U, Polyvinylchloride unplasticised
- Dimensions: BS EN 1452 Part 1 & 2 (formerly BS 3505)
- Pipe length: 6m with plain ends
- Minimum order quantity: 1 length

Size (NB) (inch)	PN (bar)	Code	Weight (kg/m)	e (mm)	di (mm)	d (mm)
2	9	**161 018 036**	0.694	2.5	55.3	60.3
3	9	**161 018 038**	1.434	3.5	81.9	88.9
4	9	**161 018 039**	2.360	4.5	105.3	114.3
6	9	**161 018 042**	5.058	6.6	155.1	168.3
8	9	**161 018 045**	1.388	7.8	203.5	219.1



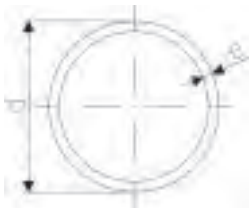

Pipe PVC-U grey class 7 (T) 12 bar at 20°C

- Thick wall pipe to allow for threading
- Material: PVC-U, Polyvinylchloride unplasticised
- Dimensions: BS EN 1452 Part 1 & 2 (formerly BS 3505)
- Pipe length: 6m with plain ends
- Minimum order quantity: 1 length

Size (NB) (inch)	PN (bar)	Code	Weight (kg/m)	e (mm)	di (mm)	d (mm)
⅜	12	**161 018 255**	0.323	3.8	9.5	17.1
½	12	**161 018 256**	0.051	4.0	13.3	21.3
¾	12	**161 018 257**	0.070	4.2	18.3	26.7
1	12	**161 018 258**	0.103	4.8	23.8	33.4
1 ¼	12	**161 018 259**	0.143	5.2	31.8	42.2
1 ½	12	**161 018 260**	0.175	5.5	37.3	48.3
2	12	**161 018 261**	1.430	6.0	48.3	60.3

Fittings



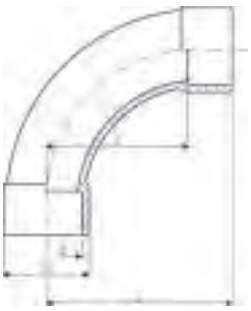

Bend 90° PVC-U Inch BS

d (inch)	PN (bar)	d (mm)	Code	Weight (kg)	z (mm)	D (mm)	L (mm)
½	15		**721 001 106**	0.026	40	29	58
¾	15		**721 001 107**	0.047	50	35	71
1	15		**721 001 108**	0.069	64	43	88
1 ¼	15		**721 001 109**	0.206	80	54	109
1 ½	15		**721 001 110**	0.312	100	64	131
2	15		**721 001 111**	0.556	126	76	163
2 ½	16	75	**721 000 112**	0.798	150	90	194
3	15		**721 001 113**	1.763	180	113	231
4	15		**721 001 115**	2.667	220	137	284
5	16	140	**721 000 116**	5.204	280	168	356
6	15		**721 001 117**	7.700	320	201	411



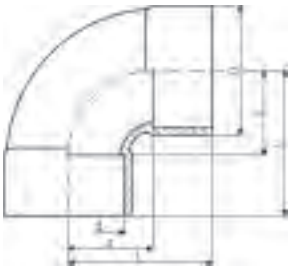

Bend 90° short pattern PVC-U Inch BS

d (inch)	PN (bar)	Code	Weight (kg)	z (mm)	D (mm)	L (mm)
8	9	**721 011 120**	8.297	168	256	287



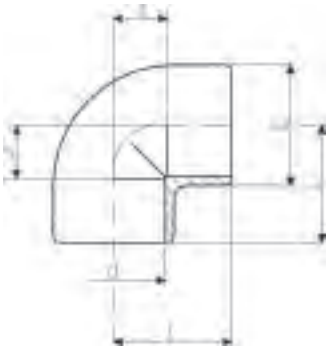

Elbow 90° PVC-U Inch BS

d (inch)	PN (bar)	Code	Weight (kg)	D (mm)	L (mm)	z (mm)
⅜	15	**721 101 105**	0.016	24	25	10
½	15	**721 101 106**	0.022	27	30	13
¾	15	**721 101 107**	0.025	33	34	14
1	15	**721 101 108**	0.038	40	39	17
1 ¼	15	**721 101 109**	0.079	51	49	22
1 ½	15	**721 101 110**	0.116	58	56	26
2	15	**721 101 111**	0.215	72	68	32
2 ½	16	**721 100 112**	0.336	87	83	40
3	15	**721 101 113**	0.606	107	97	46
4	15	**721 101 115**	1.343	137	122	59
5	16	**721 100 116**	1.945	162	146	70
6	15	**721 101 117**	4.121	201	176	86





Elbow 45° PVC-U Inch BS

d (inch)	PN (bar)	Code	Weight (kg)	D (mm)	L (mm)	z (mm)
⅜	15	**721 151 105**	0.008	22	19	4
½	15	**721 151 106**	0.012	27	21	5
¾	15	**721 151 107**	0.020	33	25	6
1	15	**721 151 108**	0.037	41	30	8
1 ¼	15	**721 151 109**	0.060	51	37	10
1 ½	15	**721 151 110**	0.089	58	41	11
2	15	**721 151 111**	0.137	72	50	14
2 ½	16	**721 150 112**	0.253	87	61	17
3	15	**721 151 113**	0.534	107	70	20
4	15	**721 151 115**	0.957	134	89	25
5	16	**721 150 116**	1.570	162	108	32
6	15	**721 151 117**	2.900	198	129	38
8	9	**721 151 120**	5.214	250	168	52





Tee 90° equal PVC-U Inch BS

d (inch)	PN (bar)	Code	Weight (kg)	D (mm)	L (mm)	z (mm)
⅜	15	**721 201 105**	0.018	25	25	10
½	15	**721 201 106**	0.036	30	30	13
¾	15	**721 201 107**	0.051	35	37	16
1	15	**721 201 108**	0.079	43	43	19
1 ¼	15	**721 201 109**	0.105	50	51	22
1 ½	15	**721 201 110**	0.157	57	56	26
2	15	**721 201 111**	0.294	72	68	32
2 ½	16	**721 200 112**	0.476	87	83	39
3	15	**721 201 113**	0.847	107	97	46
4	15	**721 201 115**	1.864	138	122	59
5	16	**721 200 116**	3.410	169	147	71
6	15	**721 201 117**	5.521	202	176	86
8	9	**721 201 120**	10.742	256	233	114



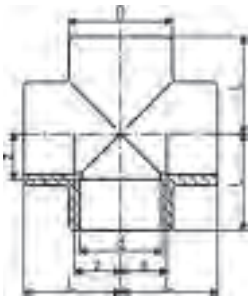

Cross PVC-U Inch BS

d (inch)	PN (bar)	Code	Weight (kg)	D (mm)	L (mm)	z (mm)
¾	12	**721 301 107**	0.050	36	33	14
1	12	**721 301 108**	0.081	44	39	17
1 ¼	12	**721 301 109**	0.130	53	49	22
1 ½	12	**721 301 110**	0.299	64	60	30
2	12	**721 301 111**	0.556	80	74	37
2 ½	10	**721 300 112**	0.725	92	83	40





Tee 45° PVC-U Inch BS

d (inch)	PN (bar)	Code	Weight (kg)	D (mm)	L (mm)	L1 (mm)	z (mm)	z1 (mm)
½	9	**721 251 106**	0.035	28	68	46	30	6
¾	9	**721 251 107**	0.052	33	83	55	35	8
1	9	**721 251 108**	0.090	41	99	67	43	8
1 ¼	9	**721 251 109**	0.145	50	118	82	55	9
1 ½	9	**721 251 110**	0.274	60	140	97	67	13
2	9	**721 251 111**	0.476	74	175	123	87	16
2 ½	6	**721 250 112**	0.816	91	207	145	101	18
3	6	**721 251 113**	1.324	107	245	173	122	20
4	6	**721 251 115**	2.403	134	298	210	147	25
5	6	**721 250 116**	5.628	168	376	266	190	34





Socket equal PVC-U Inch BS

d (inch)	PN (bar)	Code	Weight (kg)	D (mm)	L (mm)	z (mm)
⅜	15	**721 911 105**	0.007	23	32	3
½	15	**721 911 106**	0.011	27	36	3
¾	15	**721 911 107**	0.018	33	45	3
1	15	**721 911 108**	0.029	41	51	3
1 ¼	15	**721 911 109**	0.048	51	57	3
1 ½	15	**721 911 110**	0.070	58	63	3
2	15	**721 911 111**	0.128	72	77	3
2 ½	16	**721 910 112**	0.188	87	92	4
3	15	**721 911 113**	0.350	104	107	7
4	15	**721 911 115**	0.606	134	135	8
5	16	**721 910 116**	1.118	162	159	7
6	15	**721 911 117**	1.800	197	192	11
8	9	**721 911 120**	4.140	253	248	10







Reducing bush short pattern PVC-U Inch BS

Model:

- With solvent cement spigot and socket metric

	d (inch)	d1 (inch)	PN (bar)	Code	Weight (kg)	z (mm)	L (mm)
*	½	⅜	15	**721 901 334**	0.003	2	18
*	¾	⅜	15	**721 901 338**	0.013	5	21
*	¾	½	15	**721 901 337**	0.006	3	21
	1	⅜	15	**721 901 343**	0.013	8	24
	1	½	15	**721 901 342**	0.015	6	24
	1	¾	15	**721 901 341**	0.010	3	24
	1 ¼	⅜	15	**721 901 349**	0.024	13	29
	1 ¼	½	15	**721 901 348**	0.023	11	29
	1 ¼	¾	15	**721 901 347**	0.025	8	29
	1 ¼	1	15	**721 901 346**	0.018	5	29
	1 ½	½	15	**721 901 355**	0.033	13	30
	1 ½	¾	15	**721 901 354**	0.034	10	30
*	1 ½	1	15	**721 901 353**	0.038	6	30
*	1 ½	1 ¼	15	**721 901 352**	0.018	2	30
	2	¾	15	**721 901 361**	0.060	16	37
	2	1	15	**721 901 360**	0.063	13	37
	2	1 ¼	15	**721 901 359**	0.070	8	37
	2	1 ½	15	**721 901 358**	0.051	6	37
	2 ½	2	15	**721 901 364**	0.094	8	45
	3	1	15	**721 901 374**	0.178	3	50
	3	1 ½	15	**721 901 372**	0.176	3	50
	3	2	15	**721 901 371**	0.178	3	50
	3	2 ½	15	**721 901 370**	0.124	6	51
	4	3	15	**721 901 381**	0.340	13	64
	5	4	15	**721 901 384**	0.530	13	76
	6	5	15	**721 901 388**	0.830	15	91
	8	6	9	**721 901 396**	1.769	33	119





Reducing bush long pattern PVC-U Inch BS

Model:

- With solvent cement spigot and socket metric

d1 (inch)	d (inch)	PN (bar)	Code	Weight (kg)	z (mm)	L (mm)
3	5	15	**721 911 386**	0.730	111	162
4	6	15	**721 911 389**	1.312	133	197





Cap PVC-U Inch BS

d (inch)	d (mm)	PN (bar)	Code	Weight (kg)	D (mm)	L (mm)
⅜		15	**721 961 105**	0.007	26	23
½		15	**721 961 106**	0.009	30	25
¾		15	**721 961 107**	0.016	37	30
1		15	**721 961 108**	0.025	44	34
1 ¼		15	**721 961 109**	0.038	55	41
1 ½		15	**721 961 110**	0.071	62	44
2		15	**721 961 111**	0.133	78	54
2 ½	75	16	**721 960 112**	0.152	87	65
3		15	**721 961 113**	0.323	112	77
4		15	**721 962 115**	0.762	145	101
5	140	10	**721 960 116**	1.036	164	92



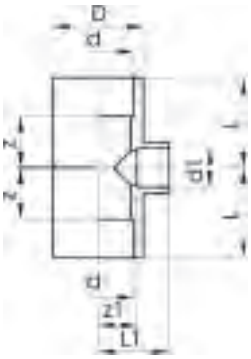

Tee 90° reducing Inch BS

d-d (inch)	PN (bar)	Code	Weight (kg)	D (mm)	L (mm)	L1 (mm)	z (mm)	z1 (mm)
¾ - ½	15	**721 201 134**	0.034	33	33	30	14	14
1 - ½	15	**721 201 141**	0.056	41	39	33	17	17
1 - ¾	15	**721 201 138**	0.058	41	39	36	17	17
1 ¼ - ¾	15	**721 201 151**	0.132	50	49	42	22	22
1 ¼ - 1	15	**721 201 147**	0.128	62	59	44	29	28
1 ½ - ½	15	**721 201 009**	0.206	62	59	50	29	28
1 ½ - ¾	15	**721 201 010**	0.185	77	73	53	37	34
1 ½ - 1	15	**721 201 164**	0.211	77	73	56	37	34
2 - ¾	15	**721 201 011**	0.385	77	73	53	37	32
2 - 1	15	**721 201 178**	0.380	77	73	56	37	32
2 - 1 ½	15	**721 201 170**	0.511	73	68	68	38	32
4 - 3	15	**721 201 137**	1.990	138	122	122	72	59
5 - 2 ½	16	**721 200 149**	3.319	172	148	122	72	78



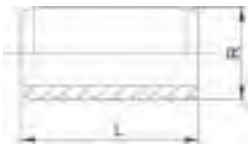

Barrel nipple PVC-U Inch BS

Model:

- With solvent cement spigots on both sides
- For the shortest possible distance between fittings
- Overall length L = 2 x socket length

d (mm)	d (inch)	PN (bar)	Code	Weight (kg)	L (mm)
	⅜	16	**721 901 905**	0.002	29
	½	16	**721 901 906**	0.004	33
	¾	16	**721 901 907**	0.008	39
	1	16	**721 901 908**	0.015	45
	1 ¼	16	**721 901 909**	0.027	54
	1 ½	16	**721 901 910**	0.050	60
	2	16	**721 901 911**	0.098	72
75	2 ½	16	**721 900 912**	0.156	88
	3	16	**721 901 913**	0.226	101
	4	16	**721 901 914**	0.476	126
140	5	16	**721 900 916**	0.932	152

Adaptor fittings





Tap connector PVC-U Inch BS Rp

Model:

- With solvent cement socket BS Inch and brass parallel female thread Rp

d (inch)	Rp (inch)	Code	Weight (kg)	s (mm)	D (mm)	l1 (mm)	l2 (mm)
⅜	½	**721 551 405**	0.040	24	23	39	55
½	¾	**721 551 406**	0.042	31	27	43	60



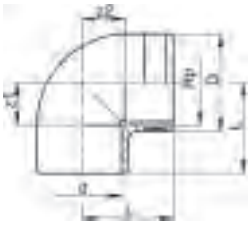

Elbow 90° PVC-U Inch BS Rp

Model:

- With solvent cement socket BS Inch and parallel female thread Rp
- Reinforcing ring stainless (A2)
- Connection to plastic or metal threads
- Install with low mechanical stress and avoid large cyclic temperature changes
- Do not use thread sealing pastes that are harmful to PVC-U

d (inch)	Rp (inch)	PN (bar)	Code	Weight (kg)	z1 (mm)	z2 (mm)	D (mm)	L (mm)
½	½	15	**721 101 206**	0.022	10	15	30	27
¾	¾	15	**721 101 207**	0.033	13	19	35	33
1	1	15	**721 101 208**	0.051	16	24	45	39





Reducing bush short PVC-U Inch BS Rp

Model:

- With solvent cement spigot BS and parallel female thread Rp
- Do not use thread sealing pastes that are harmful to PVC-U
- Install with low mechanical stress and avoid large cyclic temperature changes
- Connection to plastic thread only

d (inch)	Rp (inch)	PN (bar)	Code	Weight (kg)	z (mm)	L (mm)
½	⅜	15	**721 901 534**	0.003	3	18
¾	½	15	**721 901 537**	0.007	5	21
1	¾	15	**721 901 541**	0.011	4	24
1	½	15	**721 901 542**	0.017	8	24





Tee 90° PVC-U Inch BS Rp

Model:

- With solvent cement socket BS Inch and parallel female thread Rp
- Reinforcing ring stainless (A2)
- Connection to plastic or metal threads
- Install with low mechanical stress and avoid large cyclic temperature changes
- Do not use thread sealing pastes that are harmful to PVC-U

PN (bar)	d (inch)	Rp (inch)	Code	Weight (kg)	z1 (mm)	z2 (mm)	D (mm)	D1 (mm)	L (mm)
16	⅜	⅜	**721 201 205**	0.028	10	14	25	25	26
16	½	½	**721 201 206**	0.028	10	13	30	26	29
16	¾	¾	**721 201 207**	0.039	13	15	35	32	33
16	1	1	**721 201 208**	0.111	17	19	45	40	39





Adaptor socket nipple PVC-U Inch BS R

Model:

- With solvent cement spigot/reducing socket and taper male thread R
- Do not use thread sealing pastes that are harmful to PVC-U
- Install with low mechanical stress and avoid large cyclic temperature changes

d (inch)	R (inch)	d1 (inch)	PN (bar)	Code	Weight (kg)	z (mm)	z1 (mm)	s (mm)
¼	⅜	⅜	15	**721 911 555**	0.013	36	21	27
⅜	½	½	15	**721 911 556**	0.019	43	28	32
½	¾	¾	15	**721 911 557**	0.019	48	31	36
¾	1	1	15	**721 911 558**	0.040	55	35	46



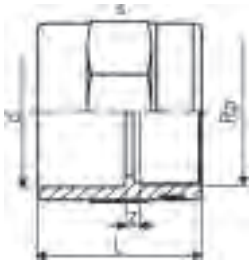

Adaptor socket PVC-U Inch BS Rp

Model:

- With solvent cement socket BS Inch and parallel female thread Rp
- Do not use thread sealing pastes that are harmful to PVC-U
- Install with low mechanical stress and avoid large cyclic temperature changes
- Reinforcing ring stainless (A2)
- Connection to plastic or metal threads

d (inch)	Rp (inch)	PN (bar)	Code	Weight (kg)	z (mm)	L (mm)	s (mm)
⅜	⅜	15	**721 911 005**	0.016	4	31	27
½	½	15	**721 911 006**	0.024	4	35	32
¾	¾	15	**721 911 007**	0.030	3	40	36
1	1	15	**721 911 008**	0.055	3	45	46
1 ¼	1 ¼	15	**721 911 009**	0.083	3	51	55
1 ½	1 ½	15	**721 911 010**	0.127	8	59	65
2	2	15	**721 911 011**	0.215	8	69	80





Adaptor bush equal PVC-U Inch BS Rp

Model:

- With solvent cement spigot BS Inch and parallel female thread Rp
- Do not use thread sealing pastes that are harmful to PVC-U
- Install with low mechanical stress and avoid large cyclic temperature changes
- Connection to plastic thread only

d (inch)	Rp (inch)	PN (bar)	Code	Weight (kg)	z (mm)	D (mm)	L (mm)
½	½	15	**721 901 406**	0.012	21	28	37
¾	¾	15	**721 901 407**	0.016	23	34	41
1	1	15	**721 901 408**	0.036	27	42	48
1 ¼	1 ¼	15	**721 901 409**	0.065	33	52	56
1 ½	1 ½	15	**721 901 410**	0.092	38	62	61
2	2	15	**721 901 411**	0.160	47	77	74





Adaptor bush equal PVC-U Inch BS R

Model:

- With solvent cement socket BS Inch and taper male thread R
- Do not use thread sealing pastes that are harmful to PVC-U
- Install with low mechanical stress and avoid large cyclic temperature changes

d (inch)	R (inch)	PN (bar)	Code	Weight (kg)	z (mm)	L (mm)	s (mm)
⅜	⅜	15	**721 911 705**	0.013	20	34	27
½	½	15	**721 911 706**	0.017	24	40	32
¾	¾	15	**721 911 707**	0.022	25	44	36
1	1	15	**721 911 708**	0.037	28	50	46
1 ¼	1 ¼	15	**721 911 709**	0.055	31	57	55
1 ½	1 ½	15	**721 911 710**	0.097	32	63	65
2	2	15	**721 911 711**	0.176	38	76	80
2 ½	2 ½	10	**721 910 712**	0.227	42	86	90





Adaptor bush reducing PVC-U Inch BS R

Model:

- With solvent cement socket BS Inch and taper male thread R
- Do not use thread sealing pastes that are harmful to PVC-U
- Install with low mechanical stress and avoid large cyclic temperature changes

d (inch)	R (inch)	PN (bar)	Code	Weight (kg)	z (mm)	L (mm)	s (mm)
½	¾	15	**721 911 737**	0.050	22	40	36
¾	1	15	**721 911 741**	0.034	27	48	46
1	1 ¼	15	**721 911 746**	0.052	29	53	55
1 ¼	1 ½	15	**721 911 752**	0.060	29	58	65
1 ½	2	15	**721 911 758**	0.071	34	64	80



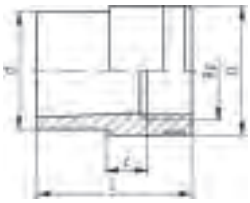

Reducing bush PVC-U Inch BS

Model:

- With solvent cement socket BS Inch and parallel female thread Rp
- Reinforcing ring stainless (A2)
- Connection to plastic or metal threads
- Install with low mechanical stress and avoid large cyclic temperature changes
- Do not use thread sealing pastes that are harmful to PVC-U

d (inch)	Rp (inch)	PN (bar)	Code	Weight (kg)	D (mm)	z (mm)	L (mm)
⅜	½	16	**721 911 434**	0.020	30	8	40





Adaptor nipple PVC-U Inch BS R

Model:

- With solvent cement spigot BS Inch and taper male thread R
- Install with low mechanical stress and avoid large cyclic temperature changes
- Do not use thread sealing pastes that are harmful to PVC-U

d (inch)	R (inch)	PN (bar)	Code	Weight (kg)	L (mm)
⅜	⅜	15	**721 913 905**	0.007	43
½	½	15	**721 913 906**	0.013	50
¾	¾	15	**721 913 907**	0.022	56
1	1	15	**721 913 908**	0.034	63
1 ¼	1 ¼	15	**721 913 909**	0.060	75
1 ½	1 ½	15	**721 913 910**	0.082	88
2	2	15	**721 913 911**	0.111	88
3	3	15	**721 913 913**	0.253	128
4	4	15	**721 913 915**	0.486	153





Hose connector PVC-U Inch BS

Model:

- With solvent cement spigot and parallel hose connection

d (inch)	PN (bar)	Code	Weight (kg)	D (mm)	L (mm)
¼	15	**721 961 404**	0.005	12	51

Unions





Union for solvent cement jointing PVC-U Inch BS

Model:

- Union End: Solvent cement socket BS Inch
- Union Bush: Solvent cement socket BS Inch
- Gasket: O-ring EPDM code no. 748 410 005-014

PN (bar)	d (inch)	d (mm)	EPDM Code	Weight (kg)	FPM Code	Weight (kg)
15	⅜		**721 511 105**	0.025	**721 511 130**	0.025
15	½		**721 511 106**	0.040	**721 511 131**	0.040
15	¾		**721 511 107**	0.054	**721 511 132**	0.064
15	1		**721 511 108**	0.080	**721 511 133**	0.088
15	1 ¼		**721 511 109**	0.108	**721 511 134**	0.133
15	1 ½		**721 511 110**	0.220	**721 511 135**	0.204
15	2		**721 511 111**	0.349	**721 511 136**	0.366
10	2 ½	75	**721 510 112**	0.614	**721 510 137**	0.621

z1 (mm)	z2 (mm)	D (mm)	L1 (mm)	L2 (mm)	G/Tr (inch)
3	8	35	19	24	3/4
3	9	43	21	26	1
3	9	51	24	29	1 1/4
3	9	58	27	33	1 1/2
3	10	72	32	39	2
3	10	83	33	46	2 1/4
3	10	100	40	58	2 3/4
3	18	135	47	62	Tr108x5





Union for solvent cement jointing PVC-U JIS

Model:

- Union End: Solvent cement socket JIS
- Gasket: O-ring EPDM or FPM
- Union Bush: Solvent cement socket JIS

Size (inch)	DN (mm)	PN (bar)	EPDM Code	Weight (kg)	FPM Code	Weight (kg)
½	15	16	**721 515 106**	0.067	**721 515 156**	0.069
¾	20	16	**721 515 107**	0.056	**721 515 157**	0.057
1	25	16	**721 515 108**	0.084	**721 515 158**	0.084
1 ¼	32	16	**721 515 109**	0.159	**721 515 159**	0.156
1 ½	40	16	**721 515 110**	0.220	**721 515 160**	0.223
2	50	16	**721 515 111**	0.391	**721 515 161**	0.395

G (inch)	z1 (mm)	z2 (mm)	D (mm)	L1 (mm)	L2 (mm)
1 ¼	3	13	51	22	29
1 ¼	3	10	51	29	22
1 ½	3	10	58	32	25
2	3	12	72	38	29
2 ¼	3	14	83	45	34
2 ¾	3	18	100	56	41



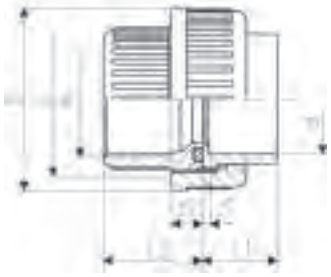

Adaptor union PVC-U Inch BS Rp

Model:

- Union End: Solvent cement socket BS Inch
- Union Bush: Parallel female thread Rp
- Connection to plastic thread only
- Do not use thread sealing pastes that are harmful to PVC-U
- Gasket: O-ring code no. 748 410 005-011

PN (bar)	Rp (inch)	d (inch)	Code	Weight (kg)	z1 (mm)	z2 (mm)	D (mm)	L1 (mm)	L2 (mm)	G (inch)
10	⅜	⅜	**721 511 205**	0.025	3	13	35	17	24	3/4
10	½	½	**721 511 206**	0.042	3	13	43	19	26	1
10	¾	¾	**721 511 207**	0.068	3	14	51	22	29	11/4
10	1	1	**721 511 208**	0.094	3	15	58	25	32	11/2
10	1 ¼	1 ¼	**721 511 209**	0.168	3	19	72	29	38	2
10	1 ½	1 ½	**721 511 210**	0.223	3	26	83	34	45	21/4
10	2	2	**721 511 211**	0.405	3	33	100	41	56	23/4





Adaptor union PVC-U JIS/metric

Model:

- Union Bush: Solvent cement socket metric
- Union End: Solvent cement socket JIS
- Gasket: O-ring EPDM

DN (mm)	Inch (inch)	PN (bar)	EPDM Code	Weight (kg)	z1 (mm)	z2 (mm)	D (mm)	L1 (mm)	L2 (mm)	G/Tr (inch)
15	1/2	16	**721 515 606**	0.070	6	13	51	29	22	11/4
20	3/4	16	**721 515 607**	0.058	3	10	51	29	22	11/4
25	1	16	**721 515 608**	0.084	3	10	58	32	25	11/2
32	11/4	16	**721 515 609**	0.152	3	10	72	38	29	2
40	11/2	16	**721 515 610**	0.212	3	10	83	45	34	21/4
50	2	16	**721 515 611**	0.381	3	10	100	56	41	23/4





Union end PVC-U Inch BS

Model:

- Solvent cement socket BS inch

d (inch)	PN (bar)	Code	Weight (kg)	z (mm)	D (mm)	D1 (mm)	L (mm)
⅜	15	**721 601 105**	0.003	3	24	22	19
½	15	**721 601 106**	0.007	3	30	27	21
¾	15	**721 601 107**	0.013	3	38	36	24
1	15	**721 601 108**	0.019	3	44	41	27
1 ¼	15	**721 601 109**	0.033	3	56	53	32
1 ½	15	**721 601 110**	0.043	3	62	59	33
2	15	**721 601 111**	0.077	3	78	74	40
2 ½	10	**721 500 162**	0.140	3	101	90	47
3	9	**721 601 113**	0.196	6	110	105	56





Union end PVC-U JIS

Model:

- Solvent cement socket JIS

Size (inch)	DN (mm)	PN (bar)	Code	Weight (kg)	z (mm)	D (mm)	D1 (mm)	L (mm)
½	15	16	**721 605 106**	0.020	6	39	36	22
¾	20	16	**721 605 107**	0.014	3	39	36	22
1	25	16	**721 605 108**	0.021	3	45	42	25
1 ¼	32	16	**721 605 109**	0.043	3	57	53	29
1 ½	40	16	**721 605 110**	0.049	3	63	59	34
2	50	16	**721 605 111**	0.092	3	78	74	41
2 ½	65	10	**721 605 112**	0.144	3	101	90	47
3	80	10	**721 605 113**	0.140	5	121	108	56
4	100	10	**721 605 114**	0.390	5	146	131	66



Union end PVC-U Rc

Model:

- Taper female thread Rc

d (mm)	Size (inch)	DN (mm)	Code	Weight (kg)
20	½	15	**721 605 606**	0.020
25	¾	20	**721 605 607**	0.016
32	1	25	**721 605 608**	0.022
40	1 ¼	32	**721 605 609**	0.040
50	1 ½	40	**721 605 610**	0.055





Union end PVC-U BS

Model:

- Solvent cement socket BS inch

d (inch)	PN (bar)	Code	Weight (kg)	z (mm)	D (mm)	D1 (mm)	L (mm)
½	15	**721 601 106**	0.007	3	30	27	21
¾	15	**721 601 107**	0.013	3	38	36	24
1	15	**721 601 108**	0.019	3	44	41	27
1 ¼	15	**721 601 109**	0.033	3	56	53	32
1 ½	15	**721 601 110**	0.043	3	62	59	33
2	15	**721 601 111**	0.077	3	78	74	40





Union bush PVC-U Inch BS

Model:

- Solvent cement socket BS inch
- Jointing face: with O-ring groove
- Gasket: O-ring EPDM code no. 748 410 005-015; d3 748 410 248

PN (bar)	d (inch)	Code	Weight (kg)	z (mm)	D (mm)	L (mm)	G (inch)
15	⅜	**721 841 105**	0.010	8	24	24	3/4"
15	½	**721 841 106**	0.012	9	29	26	1"
15	¾	**721 841 107**	0.021	9	34	29	1 1/4"
15	1	**721 841 108**	0.031	9	42	33	1 1/2"
15	1 ¼	**721 841 109**	0.056	10	52	39	2"
15	1 ½	**721 841 110**	0.075	10	62	46	2 1/4"
15	2	**721 841 111**	0.139	10	78	58	2 3/4"
9	3	**721 641 123**	0.371	19	110	69	Tr 128 x 5





Union bush PVC-U JIS

Model:

- Solvent cement socket JIS
- Jointing face: with O-ring groove
- Gasket: O-ring EPDM code no. 748 410 004-010

DN (mm)	Inch (inch)	PN (bar)	Code	Weight (kg)	z (mm)	D (mm)	L (mm)	G/Tr (inch)
15	1/2	16	**721 640 102**	0.029	13	33	29	11/4
20	3/4	16	**721 645 107**	0.023	10	33	29	11/4
25	1	16	**721 645 108**	0.033	10	41	32	11/2
32	11/4	16	**721 645 109**	0.064	12	51	38	2
40	11/2	16	**721 645 110**	0.081	14	61	45	21/4
50	2	16	**721 645 111**	0.159	18	77	56	23/4





Adaptor union PVC-U/brass Inch BS Rp

Model:

- Union Nut: PVC-U
- Union Bush: Solvent cement socket BS Inch
- Union End: Brass with parallel female thread Rp
- Gasket: O-ring EPDM Code No. 748 410 006-014; d3 748 410 248

Rp (inch)	d (inch)	PN* (bar)	Code	Weight (kg)	L1 (mm)	D (mm)	L (mm)	G (inch)	L2 (mm)	s (mm)	z1 (mm)	z2 (mm)
½	½	15	**721 551 506**	0.093	22	43	48	1	26	25	7	9
¾	¾	15	**721 551 507**	0.145	25	51	54	1 1/4	29	30	9	8
1	1	15	**721 551 508**	0.193	27	58	60	1 1/2	33	36	8	9
1 ¼	1 ¼	15	**721 551 509**	0.344	31	72	70	2	39	46	10	11
1 ½	1 ½	15	**721 551 510**	0.509	35	83	75	2 1/4	41	55	13	11
2	2	15	**721 551 511**	0.776	40	100	88	2 3/4	48	65	14	12
2 ½			**721 550 512**	1.360	47	127	109	Tr 108x5	62	85	16	18
3	3	15	**721 551 513**	2.120	52	150	121	Tr 128x5	69	95	18	19





Adaptor union PVC-U/brass Inch BS R

Model:

- Union Nut: PVC-U
- Union Bush: Solvent cement socket BS inch
- Union End: Brass with taper male thread R
- Gasket: O-ring EPDM Code No. 748 410 006-014; d3 748 410 248

d (inch)	R (inch)	PN* (bar)	Code	Weight (kg)	L (mm)	L2 (mm)	L1 (mm)	D (mm)	G (inch)	s (mm)	z (mm)
½	½	15	**721 551 906**	0.132	63	26	37	43	1	25	46
¾	¾	15	**721 551 907**	0.196	71	29	42	51	1 1/4	30	50
1	1	15	**721 551 908**	0.282	79	33	46	58	1 1/2	36	55
1 ¼	1 ¼	15	**721 551 909**	0.519	91	39	52	72	2	46	63
1 ½	1 ½	15	**721 551 910**	0.723	97	41	56	83	2 1/4	55	67
2	2	15	**721 551 911**	1.091	115	48	67	100	2 3/4	65	78
	2 ½	16	**721 550 912**	1.706	139	62	77	127	Tr 108x5	85	95
3	3	15	**721 551 913**	2.788	155	69	86	150	Tr 128x5	95	104



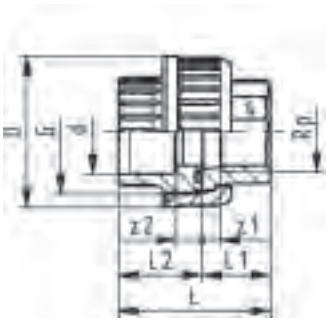

Adaptor union PVC-U/malleable iron galvanised Inch BS Rp

Model:

- Union Nut: PVC-U
- Union Bush: Solvent cement socket BS Inch
- Union End: malleable iron with parallel female thread Rp
- Gasket: O-ring EPDM Code No. 748 410 006-014; d3 748 410 248

Rp (inch)	d (inch)	d (mm)	Code	Weight (kg)	G (inch)	L2 (mm)	s (mm)	z1 (mm)	z2 (mm)	L1 (mm)	D (mm)	L (mm)
½	½		**721 531 306**	0.120	1	26	25	9	10	22	43	48
¾	¾		**721 531 307**	0.190	1 1/4	29	31	7	10	22	51	51
1	1		**721 531 308**	0.250	1 1/2	33	38	9	10	26	58	58
1 ¼	1 ¼		**721 531 309**	0.400	2	39	48	12	12	31	72	69
1 ½	1 ½		**721 531 310**	0.510	2 1/4	46	54	14	14	33	83	78
2	2		**721 531 311**	0.780	2 3/4	58	67	11	18	35	100	91
2 ½		75	**721 530 312**	1.008	Tr 108x5	62	85	12	18	39	127	101
3	3		**721 531 313**	1.740	Tr 128x5	69	96	15	19	45	150	114





Adaptor union PVC-U/malleable iron galvanised Inch BS R

Model:

- Union Nut: PVC-U
- Union Bush: Solvent cement socket BS Inch
- Union End: Malleable iron with taper male thread R
- Gasket: O-ring EPDM Code No. 748 410 006-014; d3 748 410 248

R (inch)	d (mm)	d (inch)	Code	Weight (kg)	D (mm)	L1 (mm)	L2 (mm)	L (mm)	s (mm)	z (mm)	G (inch)
½		½	**721 531 806**	0.156	43	40	26	66	25	50	1
¾		¾	**721 531 807**	0.230	51	43	29	72	31	53	1 1/4
1		1	**721 531 808**	0.330	58	48	33	80	38	58	1 1/2
1 ¼		1 ¼	**721 531 809**	0.480	72	57	39	95	48	69	2
1 ½		1 ½	**721 531 810**	0.683	83	59	46	104	54	73	2 1/4
2		2	**721 531 811**	1.082	100	62	58	118	67	80	2 3/4
2 ½	75		**721 530 812**	1.441	127	75	62	137	85	93	Tr 108x5
3		3	**721 531 813**	1.891	150	80	69	149	96	99	Tr 128x5



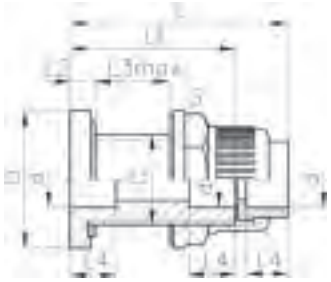

Tank adaptor for fix position stop
PVC-U Inch BS

Model:

- End connection: union with solvent cement socket BS Inch
- Gasket: flat gasket EPDM
- Gasket: O-ring FPM code no. 749 410 006-011 (to be ordered separately)

d (inch)	Code	Weight (kg)	D (mm)	L (mm)	L1 (mm)	L2 (mm)	L3 max (mm)	L4 (mm)	G (inch)	s (mm)	Diameter of bore in tank side (mm)
½	**161 050 226**	0.122	56	89	67	11	30	16	1"	46	35
¾	**161 050 227**	0.100	65	97	72	12	32	19	11/4"	50	43
1	**161 050 228**	0.231	70	103	75	12	33	22	11/2"	60	49
1 ¼	**161 050 229**	0.240	95	111	78	12	32	26	2"	80	61
1 ½	**161 050 230**	0.463	95	119	82	13	32	31	21/4"	80	67
2	**161 050 231**	0.692	115	131	87	13	33	38	23/4"	95	83





Tank adaptor for adjustable stop
PVC-U Inch BS

Model:

- With solvent cement socket BS Inch and parallel female thread G
- Gasket: flat gasket EPDM
- Gasket: O-ring FPM code no. 749 410 006-007 (to be ordered separately)

d (inch)	PN (bar)	Code	Weight (kg)	h (mm)	a (mm)	l2 (mm)	l1 (mm)	G (inch)
½	15	**161 108 706**	0.050	37	23	24	34	½
¾	15	**161 108 707**	0.048	42	28	29	34	¾

Flange adaptors and flanges





Flange adaptor PVC-U
Combined jointing face flat and serrated Inch BS

Model:

- Counterpart: flange adaptor BS Inch code no. 721 791 106-123, flange adaptor metric code no. 721 800 106-125
- Gasket: flat gasket EPDM code no. 748 400 306-323

DN (mm)	d (inch)	PN (bar)	d (mm)	Code	Weight (kg)	D1 (mm)	z (mm)	D (mm)	L (mm)	L1 (mm)
15	½	15		**721 791 106**	0.009	34	3	27	21	6
20	¾	15		**721 791 107**	0.014	41	3	33	24	7
25	1	15		**721 791 108**	0.023	50	3	41	27	7
32	1 ¼	15		**721 791 109**	0.035	61	3	50	32	8
40	1 ½	15		**721 791 110**	0.058	73	3	61	33	8
50	2	15		**721 791 111**	0.107	91	3	77	40	9
65	2 ½	16	75	**721 790 112**	0.159	106	3	91	47	10
80	3	15		**721 791 113**	0.269	125	5	108	56	11
100	4	15		**721 791 115**	0.422	155	5	136	69	12
125	5	16	140	**721 790 116**	0.725	188	5	165	81	14
150	6	15		**721 791 117**	1.172	217	5	198	96	16
200	8	9		**721 791 120**	2.028	274	6	248	122	20
250	10	9		**721 791 122**	3.677	329	9	307	151	23
300	12	6		**721 791 123**	3.418	379	4	346	172	27





Flange adaptor PVC-U
Jointing face with O-ring groove Inch BS

Model:

- Counterpart: flange adaptor BS 721 791 111-120
- Flange: PVC-U ANSI code no. 721 702 211-220, PP/steel ANSI code no. 727 701 211-319, PP-V ANSI code no. 727 701 411-419
- Gasket: O-ring EPDM code no. 748 410 013-163, FPM code no. 749 410 013-163

DN (mm)	d (inch)	d (mm)	PN (bar)	Code	Weight (kg)	D1 (mm)	z (mm)	D (mm)	L (mm)	L1 (mm)
50	2		15	**721 811 111**	0.125	91	8	77	46	14
65	2 ½	75	16	**721 810 112**	0.183	106	8	91	52	15
125	5	140	16	**721 810 116**	0.804	188	11	165	87	20
200	8		9	**721 811 120**	2.070	274	12	248	128	26

Installation fittings



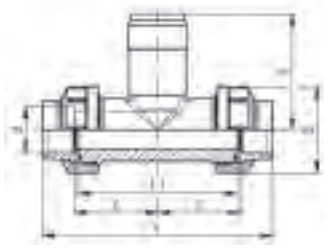

Installation fitting type 310 PVC-U
For socket systems Inch BS

Model:

- Material: PVC-U
- Threaded outlet 1 ¼" NPSM
- Union end with solvent cement socket PVC-U

Range of use:

- Compatible Signet flow sensors: type 2551, 2537, 515, 8510, 2536, 8512
- Compatible Signet pH/ORP sensors: type 2724, 2725, 2726, 2734, 2736, 2735

Attention:

- sensor length depends on installation fitting

d (inch)	DN (mm)	PN (bar)	EPDM Code	Weight (kg)	FPM Code	Weight (kg)
½	15	15	**721 310 306**	0.181	**721 310 336**	0.181
¾	20	15	**721 310 307**	0.244	**721 310 337**	0.244
1	25	15	**721 310 308**	0.333	**721 310 338**	0.299
1 ¼	32	15	**721 310 309**	0.403	**721 310 339**	0.440
1 ½	40	15	**721 310 310**	0.700	**721 310 340**	0.579
2	50	15	**721 310 311**	1.011	**721 310 341**	1.011

d (inch)	DN (mm)	L1 (mm)	D (mm)	H (mm)	L (mm)	z (mm)	Sensor Type
½	15	90	43	76	131	48	flow X0, pH XX
¾	20	100	51	78	147	53	flow X0, pH XX
1	25	110	58	81	164	58	flow X0, pH XX
1 ¼	32	110	72	85	171	58	flow X0, pH XX
1 ½	40	120	83	89	188	63	flow X0, pH XX
2	50	130	100	95	211	68	flow X0, pH XX



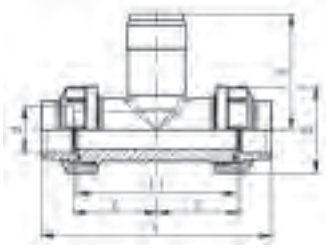

Installation fitting type 310 PVC-U
for Socket Systems JIS

Model:

- Threaded outlet 1 ¼" NPSM
- Union end with solvent cement socket PVC-U

Range of use:

- Compatible Signet flow sensors: type 2551, 2537, 515, 8510, 2536, 8512
- Compatible Signet pH/ORP sensors: type 2724, 2725, 2726, 2734, 2736, 2735

Attention:

- sensor length depends on installation fitting

d (mm)	DN (mm)	PN (bar)	EPDM Code	Weight (kg)	FPM Code	Weight (kg)
20	15	16	**721 310 506**	0.244	**721 310 536**	0.244
25	20	16	**721 310 507**	0.244	**721 310 537**	0.244
32	25	16	**721 310 508**	0.333	**721 310 538**	0.303
40	32	16	**721 310 509**	0.440	**721 310 539**	0.440
50	40	16	**721 310 510**	0.700	**721 310 540**	0.700
63	50	16	**721 310 511**	1.011	**721 310 541**	1.011

d (mm)	DN (mm)	Sensor Type	L (mm)	z (mm)	D (mm)	H (mm)	L1 (mm)
20	15	X0	144	56	51	78	90
25	20	X0	144	53	51	78	100
32	25	X0	160	58	58	81	110
40	32	X0	168	58	72	85	110
50	40	X0	188	63	83	89	120
63	50	X0	212	68	100	95	130

Ball valves type 546





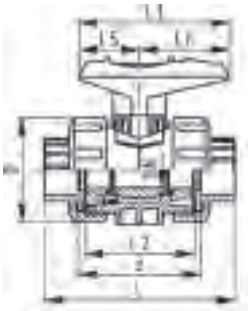

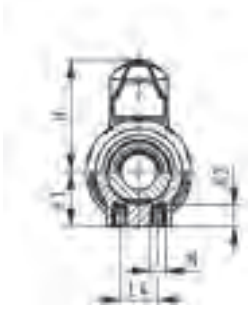

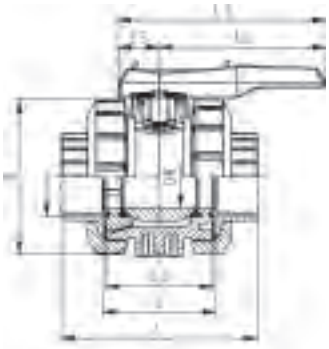

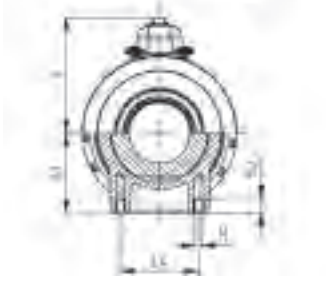

Ball valve type 546 PVC-U
With mounting inserts
With solvent cement sockets inch BS

Model:

- For easy installation and removal
- Ball seals PTFE
- Integrated stainless steel mounting inserts
- z-dimension, valve end and union nut are **not compatible** with type 346 (DN10/15-50) resp. type 370 (DN65-100)

Option:

- Individual configuration of the valve (see diagram)
- Multifunctional module with integrated limit switches
- Pneumatic or electric actuators from +GF+

d (mm)	Size (inch)	DN (mm)	PN (bar)	kv-value (Δp=1 bar) (l/min)	EPDM Code	Weight (kg)	FPM Code	Weight (kg)
	⅜	10	16	71	**161 546 241**	0.150	**161 546 251**	0.150
	½	15	16	185	**161 546 242**	0.150	**161 546 252**	0.150
	¾	20	16	350	**161 546 243**	0.230	**161 546 253**	0.230
	1	25	16	700	**161 546 244**	0.335	**161 546 254**	0.330
	1 ¼	32	16	1000	**161 546 245**	0.585	**161 546 255**	0.585
	1 ½	40	16	1600	**161 546 246**	0.850	**161 546 256**	0.862
	2	50	16	3100	**161 546 247**	1.567	**161 546 257**	1.582
75	2 ½	65	16	5000	**161 546 068**	4.343	**161 546 078**	3.563
	3	80	16	7000	**161 546 249**	5.607	**161 546 259**	5.404
	4	100	16	11000	**161 546 250**	8.531	**161 546 260**	8.581

D (mm)	H (mm)	H1 (mm)	H2 (mm)	L (mm)	L1 (mm)	L2 (mm)	L4 (mm)	L5 (mm)	L6 (mm)	M	z (mm)	closest inch (inch)
50	57	27	12	92	77	56	25	32	45	6	67	
50	57	27	12	95	77	56	25	32	45	6	61	
58	67	30	12	110	97	65	25	39	58	6	70	
68	73	36	12	123	97	71	25	39	58	6	76	
84	90	44	15	146	128	85	45	54	74	8	90	
97	97	51	15	157	128	89	45	54	74	8	94	
124	116	64	15	183	152	101	45	66	87	8	107	
166	149	85	15	233	270	136	70	64	206	8	144	2 ½
200	161	105	15	254	270	141	70	64	206	8	151	
238	178	123	22	301	320	164	120	64	256	12	174	





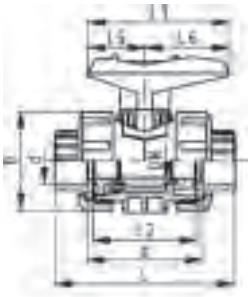



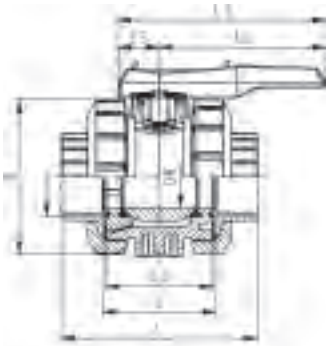



Ball valve type 546 PVC-U
With mounting inserts
With solvent cement sockets JIS

Model:

- For easy installation and removal
- Ball seals PTFE
- Integrated stainless steel mounting inserts
- z-dimension, valve end and union nut are **not compatible** with type 346 (DN10/15-50) resp. type 370 (DN65-100)

Option:

- Individual configuration of the valve (see diagram)
- Multifunctional module with integrated limit switches
- Pneumatic or electric actuators from +GF+

Size (inch)	DN (mm)	PN (bar)	kv-value (Δp=1 bar) (l/min)	EPDM Code	Weight (kg)	FPM Code	Weight (kg)
½	15	16	185	**161 546 882**	0.157	**161 546 892**	0.155
¾	20	16	350	**161 546 883**	0.236	**161 546 893**	0.241
1	25	16	700	**161 546 884**	0.346	**161 546 894**	0.349
1 ¼	32	16	1000	**161 546 885**	0.617	**161 546 895**	0.610
1 ½	40	16	1600	**161 546 886**	0.851	**161 546 896**	0.862
2	50	16	3100	**161 546 887**	1.568	**161 546 897**	1.495
2 ½	65	16	5000	**161 546 888**	4.298	**161 546 898**	4.900
3	80	16	7000	**161 546 889**	7.400	**161 546 899**	7.400
4	100	16	11000	**161 546 890**	8.539	**161 546 900**	11.500

Size (inch)	D (mm)	H (mm)	H1 (mm)	H2 (mm)	L (mm)	L1 (mm)	L2 (mm)	L4 (mm)	L5 (mm)	L6 (mm)	M	z (mm)
½	50	57	27	12	95	77	56	25	32	45	M6	64
¾	58	67	30	12	110	97	65	25	39	58	M6	72
1	68	73	36	12	123	97	71	25	39	58	M6	79
1 ¼	84	90	44	15	146	128	85	45	54	74	M8	94
1 ½	97	97	51	15	157	128	89	45	54	74	M8	95
2	124	116	64	15	183	152	101	45	66	87	M8	107
2 ½	166	149	85	15	233	270	136	70	64	206	M8	144
3	200	161	105	15	254	270	141	70	64	206	M8	151
4	238	178	123	22	301	320	164	70	64	256	M12	174





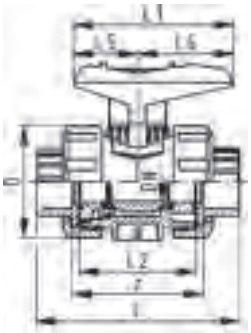



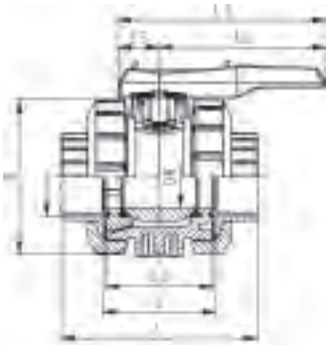

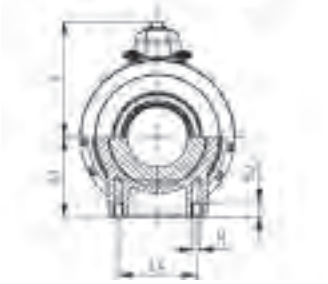

Ball valve type 546 PVC-U
With solvent cement sockets Inch BS

Model:

- For easy installation and removal
- Ball seals PTFE
- Without mounting inserts
- z-dimension, valve end and union nut are **not compatible** with type 346 (DN10/15-50) resp. type 370 (DN65-100)

Option:

- Individual configuration of the valve (see diagram)
- Multifunctional module with integrated limit switches
- Pneumatic or electric actuators from +GF+

d (mm)	Size (inch)	DN (mm)	PN (bar)	kv-value (Δp=1 bar) (l/min)	EPDM Code	Weight (kg)	FPM Code	Weight (kg)
	⅜	10	16	71	**161 546 201**	0.151	**161 546 211**	0.150
	½	15	16	185	**161 546 202**	0.149	**161 546 212**	0.150
	¾	20	16	350	**161 546 203**	0.229	**161 546 213**	0.230
	1	25	16	700	**161 546 204**	0.334	**161 546 214**	0.336
	1 ¼	32	16	1000	**161 546 205**	0.588	**161 546 215**	0.585
	1 ½	40	16	1600	**161 546 206**	0.843	**161 546 216**	0.815
	2	50	16	3100	**161 546 207**	1.564	**161 546 217**	1.577
75		65	16	5000	**161 546 008**	3.781	**161 546 018**	3.794
	3	80	16	7000	**161 546 209**	6.189	**161 546 219**	7.400
	4	100	16	11000	**161 546 210**	11.600	**161 546 220**	11.600

D (mm)	H (mm)	H1 (mm)	L (mm)	L1 (mm)	L2 (mm)	L4 (mm)	L5 (mm)	L6 (mm)	z (mm)	closest inch (inch)
50	57	27	92	77	56	25	32	45	60	
50	57	27	95	77	56	25	32	45	60	
58	67	30	110	97	65	25	39	58	69	
68	73	36	123	97	71	25	39	58	75	
84	90	44	146	128	85	45	54	74	89	
97	97	51	157	128	89	45	54	74	97	
124	116	64	183	152	101	45	66	87	110	
166	149	85	233	270	136	70	64	206	144	2 ½
200	161	105	254	270	141	70	64	206	151	
238	178	123	301	320	164	120	64	256	174	





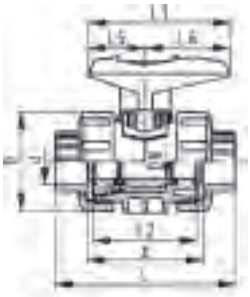

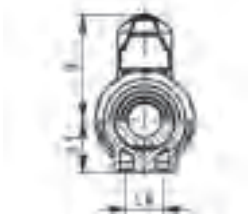

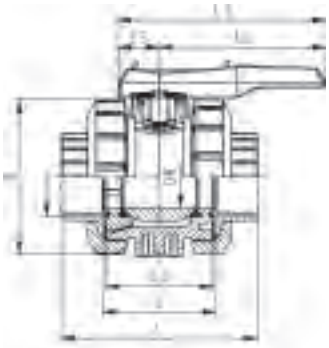

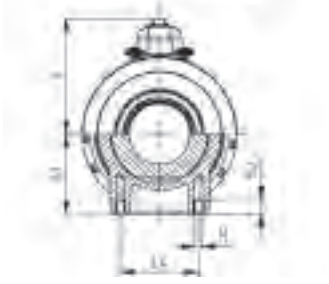

Ball valve type 546 PVC-U
With solvent cement sockets JIS

Model:

- For easy installation and removal
- Ball seals PTFE
- Without mounting inserts
- z-dimension, valve end and union nut are **not compatible** with type 346 (DN10/15-50) resp. type 370 (DN65-100)

Option:

- Individual configuration of the valve (see diagram)
- Multifunctional module with integrated limit switches
- Pneumatic or electric actuators from +GF+

Size (inch)	DN (mm)	PN (bar)	kv-value (Δp=1 bar) (l/min)	EPDM Code	Weight (kg)	FPM Code	Weight (kg)
½	15	16	185	**161 546 402**	0.150	**161 546 412**	0.150
¾	20	16	350	**161 546 403**	0.232	**161 546 413**	0.236
1	25	16	700	**161 546 404**	0.340	**161 546 414**	0.343
1 ¼	32	16	1000	**161 546 405**	0.611	**161 546 415**	0.610
1 ½	40	16	1600	**161 546 406**	0.844	**161 546 416**	0.855
2	50	16	3100	**161 546 407**	1.563	**161 546 417**	1.576
2 ½	65	16	5000	**161 546 408**	4.900	**161 546 418**	4.900
3	80	16	7000	**161 546 409**	7.400	**161 546 419**	7.400
4	100	16	11000	**161 546 410**	11.500	**161 546 420**	11.500

Size (inch)	D (mm)	H (mm)	H1 (mm)	L (mm)	L1 (mm)	L2 (mm)	L4 (mm)	L5 (mm)	L6 (mm)	z (mm)
½	50	57	27	95	77	56	25	32	45	64
¾	58	67	30	110	97	65	25	39	58	72
1	68	73	36	123	97	71	25	39	58	79
1 ¼	84	90	44	146	128	85	45	54	74	94
1 ½	97	97	51	157	128	89	45	54	74	95
2	124	116	64	183	152	101	45	66	87	107
2 ½	166	149	85	233	270	136	70	64	206	144
3	200	161	105	254	270	141	70	64	206	151
4	238	178	123	301	320	164	120	64	256	174



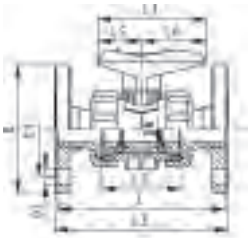

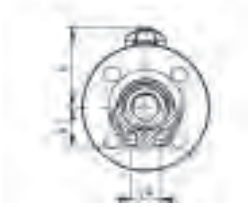

Ball valve type 546 PVC-U
With fixed flanges PVC-U JIS

Model:

- For easy installation and removal
- Ball seals PTFE
- Without mounting inserts
- z-dimension, valve end and union nut are not compatible with type 346

Option:

- Individual configuration of the valve (see diagram)
- Multifunctional module with integrated limit switches
- Pneumatic or electric actuators from +GF+

Size (inch)	DN (mm)	PN (bar)	kv-value (Δp=1 bar) (l/min)	EPDM Code	Weight (kg)	FPM Code	Weight (kg)
½	15	16	185	**161 546 482**	0.411	**161 546 492**	0.412
¾	20	16	350	**161 546 483**	0.534	**161 546 493**	0.535
1	25	16	700	**161 546 484**	0.816	**161 546 494**	0.818
1 ¼	32	16	1000	**161 546 485**	1.385	**161 546 495**	1.385
1 ½	40	16	1600	**161 546 486**	1.561	**161 546 496**	1.569
2	50	16	3100	**161 546 487**	2.546	**161 546 497**	2.572

Size (inch)	D (mm)	D1 (mm)	D3 (mm)	H (mm)	H1 (mm)	L1 (mm)	L2 (mm)	L3 (mm)	L4 (mm)	L5 (mm)	L6 (mm)	T (mm)
½	95	70	15	57	27	77	56	143	25	32	45	14
¾	100	75	15	67	30	97	65	172	25	39	58	14
1	125	90	19	73	36	97	71	187	25	39	58	14
1 ¼	135	100	19	90	44	128	85	190	45	54	74	17
1 ½	140	105	19	97	51	128	89	212	45	54	74	18
2	155	120	19	116	64	152	101	234	45	66	87	20





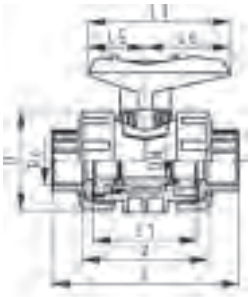



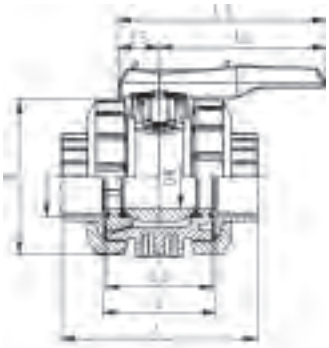

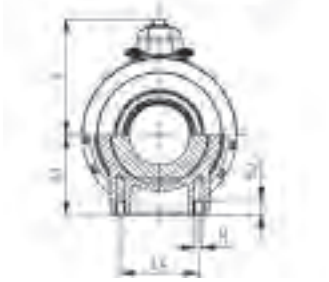

Ball valve type 546 PVC-U
With threaded sockets Rc

Model:

- For easy installation and removal
- Ball seals PTFE
- Without mounting inserts
- z-dimension, valve end and union nut are **not compatible** with type 346 (DN10/15-50) resp. type 370 (DN65-100)

Option:

- Individual configuration of the valve (see diagram)
- Multifunctional module with integrated limit switches
- Pneumatic or electric actuators from +GF+

Rc (inch)	DN (mm)	PN (bar)	kv-value (Δp=1 bar) (l/min)	EPDM Code	Weight (kg)	FPM Code	Weight (kg)
½	15	10	185	**161 546 422**	0.160	**161 546 432**	0.159
¾	20	10	350	**161 546 423**	0.240	**161 546 433**	0.240
1	25	10	700	**161 546 424**	0.345	**161 546 434**	0.345
1 ¼	32	10	1000	**161 546 425**	0.610	**161 546 435**	0.610
1 ½	40	10	1600	**161 546 426**	0.835	**161 546 436**	0.835
2	50	10	3100	**161 546 427**	1.583	**161 546 437**	1.520
2 ½	65	10	5000	**161 546 428**	5.000	**161 546 438**	5.000
3	80	10	7000	**161 546 429**	7.500	**161 546 439**	7.500
4	100	10	11000	**161 546 430**	11.700	**161 546 440**	11.700

Rc (inch)	D (mm)	H (mm)	H1 (mm)	L (mm)	L1 (mm)	L2 (mm)	L4 (mm)	L5 (mm)	L6 (mm)	z (mm)
½	50	57	27	100	77	56	25	32	45	66
¾	58	67	30	114	97	65	25	39	58	78
1	68	73	36	127	97	71	25	39	58	85
1 ¼	84	90	44	146	128	85	45	54	74	98
1 ½	97	97	51	152	128	89	45	54	74	104
2	124	116	64	177	152	101	45	66	87	119
2 ½	166	149	85	233	270	136	70	64	206	144
3	200	161	105	254	270	141	70	64	206	151
4	238	178	123	301	320	164	120	64	256	174



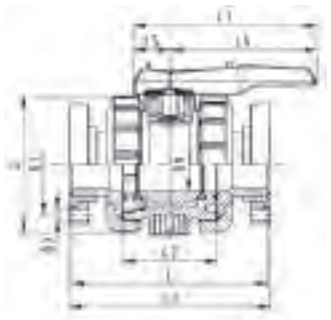



Ball valve type 546 PVC-U
With backing flanges PVC-U JIS

Model:

- For easy installation and removal
- Ball seals PTFE
- Without mounting inserts
- z-dimension, valve end and union nut are **not compatible** with type 346 (DN10/15-50) resp. type 370 (DN65-100)
- Overall length according to EN 558
- Connecting dimensions: JIS B 2220, 10K

Option:

- Individual configuration of the valve (see diagram)
- Multifunctional module with integrated limit switches
- Pneumatic or electric actuators from +GF+

Size (inch)	DN (mm)	PN (bar)	kv-value (Δp=1 bar) (l/min)	EPDM Code	Weight (kg)	FPM Code	Weight (kg)
2 ½	65	10	5000	**161 546 268**	4.670	**161 546 278**	5.600
3	80	10	7000	**161 546 269**	8.400	**161 546 279**	8.400
4	100	10	11000	**161 546 270**	11.473	**161 546 280**	13.100

Size (inch)	D (mm)	D1 (mm)	D3 (mm)	H (mm)	H1 (mm)	L (mm)	L1 (mm)	L2 (mm)	L3 (mm)	L4 (mm)	L5 (mm)	L6 (mm)
2 ½	166	140	19	149	85	284	270	136	261	70	64	206
3	200	150	19	161	105	300	270	141	304	70	64	206
4	238	175	19	178	123	340	320	164	373	120	64	256





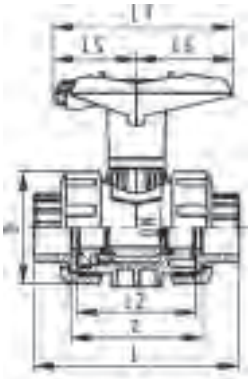

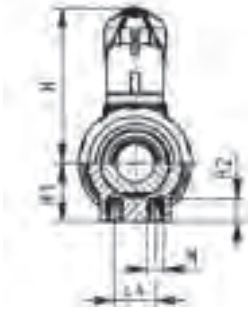

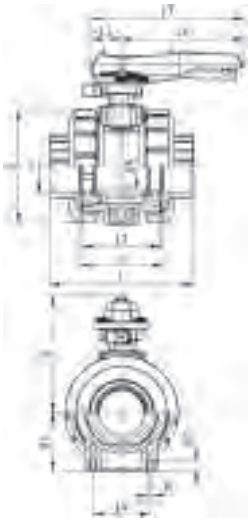

Ball valve type 546 PVC-U
With lockable handle
With solvent cement sockets Inch BS

Model:

- For easy installation and removal
- Ball seals PTFE
- Integrated stainless steel mounting inserts
- z-dimension, valve end and union nut are **not compatible** with type 346 (DN10/15-50) resp. type 370 (DN65-100)
- Lockable hand lever with ratchet settings

Option:

- Individual configuration of the valve (see diagram)
- Multifunctional module with integrated limit switches
- Pneumatic or electric actuators from +GF+

Size (inch)	DN (mm)	PN (bar)	kv-value (Δp=1 bar) (l/min)	EPDM Code	Weight (kg)	FPM Code	Weight (kg)
⅜	10	16	71	**161 546 221**	0.165	**161 546 231**	0.165
½	15	16	185	**161 546 222**	0.164	**161 546 232**	0.165
¾	20	16	350	**161 546 223**	0.255	**161 546 233**	0.255
1	25	16	700	**161 546 224**	0.358	**161 546 234**	0.355
1 ¼	32	16	1000	**161 546 225**	0.625	**161 546 235**	0.625
1 ½	40	16	1600	**161 546 226**	0.855	**161 546 236**	0.855
2	50	16	3100	**161 546 227**	1.605	**161 546 237**	1.535
2 ½	65	16	5000	**161 546 088**	5.200	**161 546 098**	5.200
3	80	16	7000	**161 546 229**	7.700	**161 546 239**	7.700
4	100	16	11000	**161 546 230**	12.000	**161 546 240**	12.000

Size (inch)	D (mm)	H (mm)	H1 (mm)	H2 (mm)	L (mm)	L1 (mm)	L2 (mm)	L4 (mm)	L5 (mm)	L6 (mm)	M	z (mm)
⅜	50	79	27	12	92	87	56	25	42	45	M6	60
½	50	79	27	12	95	87	56	25	42	45	M6	60
¾	58	88	30	12	110	108	65	25	50	58	M6	69
1	68	94	36	12	123	108	71	25	50	58	M6	75
1 ¼	84	113	44	15	146	140	85	45	66	75	M8	89
1 ½	97	119	51	15	157	140	89	45	66	75	M8	97
2	124	141	64	15	183	165	101	45	78	87	M8	110
2 ½	166	224	85	15	233	270	136	70	64	206	M8	144
3	200	235	105	15	254	270	141	70	64	206	M8	151
4	238	245	123	22	301	320	164	120	64	256	M12	174



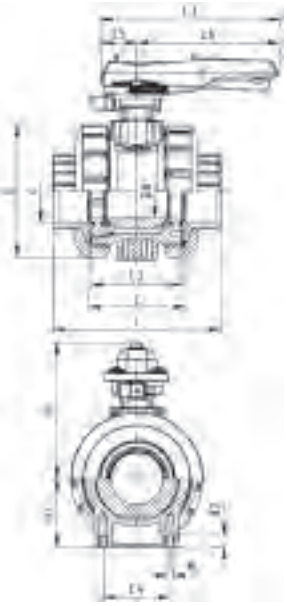

Ball valve type 546 PVC-U
With lockable handle
With solvent cement sockets JIS

Model:

- For easy installation and removal
- Ball seals PTFE
- Without mounting inserts
- z-dimension, valve end and union nut are **not compatible** with type 346 (DN10/15-50) resp. type 370 (DN65-100)
- Lockable hand lever with ratchet settings

Option:

- Individual configuration of the valve (see diagram)
- Multifunctional module with integrated limit switches
- Pneumatic or electric actuators from +GF+

Size (inch)	DN (mm)	PN (bar)	kv-value (Δp=1 bar) (l/min)	EPDM Code	Weight (kg)
2 ½	65	16	5000	**161 546 448**	5.200
3	80	16	7000	**161 546 449**	7.700
4	100	16	11000	**161 546 450**	11.900

Size (inch)	D (mm)	H (mm)	H1 (mm)	L (mm)	L1 (mm)	L2 (mm)	L4 (mm)	L5 (mm)	L6 (mm)	z (mm)
2 ½	166	224	85	233	270	136	70	64	206	144
3	200	235	105	254	270	141	70	64	206	151
4	238	245	123	301	320	164	120	64	256	174

Ball valves electric type 107



Ball valve type 107 PVC-U 100-230V
With manual emergency override
With solvent cement sockets Inch BS

Model:

- Built on with electric actuator EA11
- Voltage 100-230 V, 50-60 Hz
- Control range 90°<)
- Control time 5 s/90°<)
- For easy installation and removal
- Integrated stainless steel mounting inserts

Option:

- Individual configuration of the valve (see diagram)

Size (inch)	DN (mm)	PN (bar)	kv-value (Δp=1 bar) (l/min)	EPDM Code	Weight (kg)	FPM Code	Weight (kg)
⅜	10	10	70	**199 107 402**	2.100	**199 107 412**	2.100
½	15	10	185	**199 107 403**	2.137	**199 107 413**	2.100
¾	20	10	350	**199 107 404**	2.226	**199 107 414**	2.200
1	25	10	700	**199 107 405**	2.300	**199 107 415**	2.334
1 ¼	32	10	1000	**199 107 406**	2.600	**199 107 416**	2.600
1 ½	40	10	1600	**199 107 407**	3.000	**199 107 417**	3.000
2	50	10	3100	**199 107 408**	3.597	**199 107 418**	3.800

Size (inch)	D (mm)	H (mm)	H1 (mm)	H2 (mm)	H3 (mm)	H5 (mm)	L (mm)	L1 (mm)	L2 (mm)	L4 (mm)	L5 (mm)	L6 (mm)	L7 (mm)	L8 (mm)	z (mm)
⅜	50	200	27	64	64	137	92	161	56	25	79	1	122	67	60
½	50	200	27	64	64	137	95	161	56	25	79	83	122	67	60
¾	58	209	30	73	64	137	110	161	65	25	79	83	122	67	69
1	68	209	36	73	64	137	123	161	71	25	79	83	122	67	75
1 ¼	84	220	44	84	64	137	146	161	85	45	79	83	122	67	89
1 ½	97	220	51	84	64	137	157	161	89	45	79	83	122	67	97
2	124	243	64	106	64	137	183	161	101	45	79	83	122	67	110

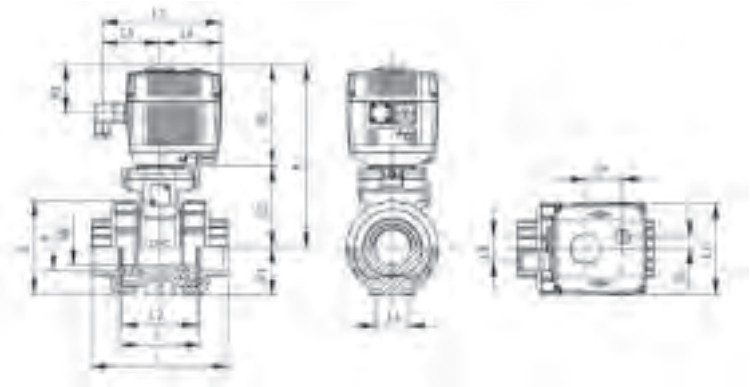



Ball valve type 107 PVC-U 100-230V
With manual emergency override
With solvent cement sockets JIS

Model:

- Built on with electric actuator EA11
- Voltage 100-230 V, 50-60 Hz
- Control range 90°<)
- Control time 5 s/90°<)
- For easy installation and removal
- Integrated stainless steel mounting inserts

Option:

- Individual configuration of the valve (see diagram)

Size (inch)	DN (mm)	PN (bar)	kv-value (Δp=1 bar) (l/min)	EPDM Code	Weight (kg)	FPM Code	Weight (kg)
½	15	10	185	**199 107 483**	2.100	**199 107 493**	2.100
¾	20	10	350	**199 107 484**	2.200	**199 107 494**	2.200
1	25	10	700	**199 107 485**	2.300	**199 107 495**	2.300
1 ¼	32	10	1000	**199 107 486**	2.600	**199 107 496**	2.600
1 ½	40	10	1600	**199 107 487**	2.902	**199 107 497**	3.000
2	50	10	3100	**199 107 488**	3.660	**199 107 498**	3.800

Size (inch)	D (mm)	H (mm)	H1 (mm)	H2 (mm)	H3 (mm)	H5 (mm)	L (mm)	L1 (mm)	L2 (mm)	L4 (mm)	L5 (mm)	L6 (mm)	L7 (mm)	L8 (mm)	z (mm)
½	50	200	27	64	64	137	95	161	56	25	79	83	122	67	64
¾	58	209	30	73	64	137	110	161	65	25	79	83	122	67	72
1	68	209	36	73	64	137	123	161	71	25	79	83	122	67	79
1 ¼	84	220	44	84	64	137	146	161	85	45	79	83	122	67	94
1 ½	97	220	51	84	64	137	157	161	89	45	79	83	122	67	95
2	124	243	64	106	64	137	183	161	101	45	79	83	122	67	107

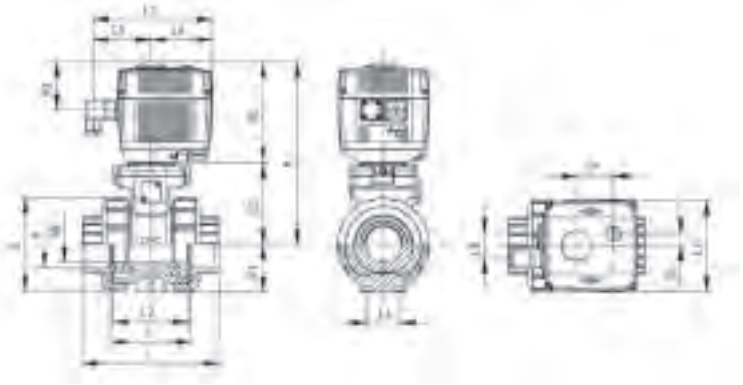



Ball valve type 107 PVC-U 24V
With manual emergency override
With solvent cement sockets Inch BS

Model:

- Built on with electric actuator EA11
- Voltage 24 V AC/DC
- Control range 90°<)
- Control time 5 s/90°<)
- For easy installation and removal
- Integrated stainless steel mounting inserts

Option:

- Individual configuration of the valve (see diagram)

Size (inch)	DN (mm)	PN (bar)	kv-value (Δp=1 bar) (l/min)	EPDM Code	Weight (kg)	FPM Code	Weight (kg)
⅜	10	10	70	**199 107 442**	2.100	**199 107 452**	2.100
½	15	10	185	**199 107 443**	2.100	**199 107 453**	2.100
¾	20	10	350	**199 107 444**	2.200	**199 107 454**	2.200
1	25	10	700	**199 107 445**	2.323	**199 107 455**	2.325
1 ¼	32	10	1000	**199 107 446**	2.600	**199 107 456**	2.600
1 ½	40	10	1600	**199 107 447**	2.832	**199 107 457**	3.000
2	50	10	3100	**199 107 448**	3.800	**199 107 458**	3.800

Size (inch)	D (mm)	H (mm)	H1 (mm)	H2 (mm)	H3 (mm)	H5 (mm)	L (mm)	L1 (mm)	L2 (mm)	L4 (mm)	L5 (mm)	L6 (mm)	L7 (mm)	L8 (mm)	z (mm)
⅜	50	200	27	64	64	137	92	161	56	25	79	83	122	67	60
½	50	200	27	64	64	137	95	161	56	25	79	83	122	67	60
¾	58	209	30	73	64	137	110	161	65	25	79	83	122	67	69
1	68	209	36	73	64	137	123	161	71	25	79	83	122	67	75
1 ¼	84	220	44	84	64	137	146	161	85	45	79	83	122	67	89
1 ½	97	220	51	84	64	137	157	161	89	45	79	83	122	67	97
2	124	243	64	106	64	137	183	161	101	45	79	83	122	67	110

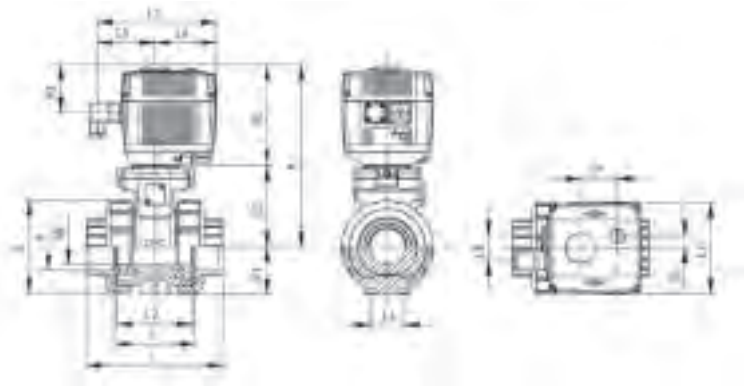



Ball valve type 107 PVC-U 24V
With manual emergency override
With solvent cement sockets JIS

Model:

- Built on with electric actuator EA11
- Voltage 24 V AC/DC
- Control range 90°<)
- Control time 5 s/90°<)
- For easy installation and removal
- Integrated stainless steel mounting inserts

Option:

- Individual configuration of the valve (see diagram)

Size (inch)	DN (mm)	PN (bar)	kv-value (Δp=1 bar) (l/min)	EPDM Code	Weight (kg)	FPM Code	Weight (kg)
½	15	10	185	**199 107 863**	2.100	**199 107 873**	2.100
¾	20	10	350	**199 107 864**	2.200	**199 107 874**	2.200
1	25	10	700	**199 107 865**	2.300	**199 107 875**	2.300
1 ¼	32	10	1000	**199 107 866**	2.600	**199 107 876**	2.600
1 ½	40	10	1600	**199 107 867**	3.000	**199 107 877**	3.000
2	50	10	3100	**199 107 868**	3.800	**199 107 878**	3.800

Size (inch)	D (mm)	H (mm)	H1 (mm)	H2 (mm)	H3 (mm)	H5 (mm)	L (mm)	L1 (mm)	L2 (mm)	L4 (mm)	L5 (mm)	L6 (mm)	L7 (mm)	L8 (mm)	z (mm)
½	50	200	27	64	64	137	95	161	56	25	79	83	122	67	64
¾	58	209	30	73	64	137	110	161	65	25	79	83	122	67	72
1	68	209	36	73	64	137	123	161	71	25	79	83	122	67	79
1 ¼	84	220	44	84	64	137	146	161	85	45	79	83	122	67	94
1 ½	97	220	51	84	64	137	157	161	89	45	79	83	122	67	95
2	124	243	64	106	64	137	183	161	101	45	79	83	122	67	107

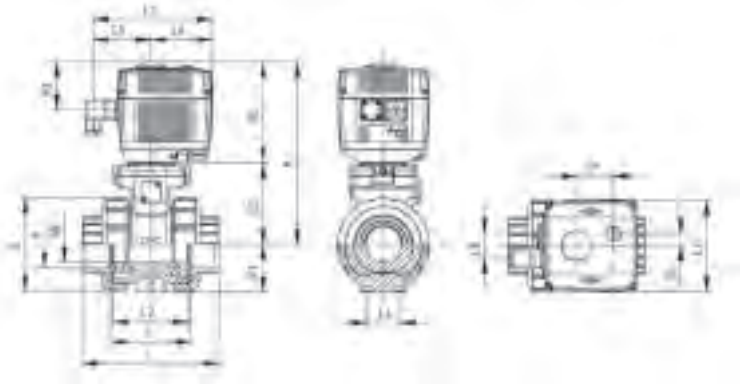

Ball valves electric type 183





Ball valve type 183 PVC-U 100-230V
With manual emergency override
With solvent cement sockets Inch BS

Model:

- Voltage 100-230 V, 50-60 Hz
- Factory set control range 90°<)
- Heating element, position feedback (Open/Close/ Middle)
- Integrated stainless steel mounting inserts

Option:

- Other valve and actuator configurations available
- Optional accessories: Fail-safe return unit, Monitoring board, Position controller, Profibus DP board

Size (inch)	DN (mm)	PN (bar)	kv-value (Δp=1 bar) (l/min)	EA	EPDM Code	Weight (kg)	FPM Code	Weight (kg)
⅜	10	10	70	EA25	**199 183 002**	2.100	**199 183 012**	2.100
½	15	10	185	EA25	**199 183 003**	2.100	**199 183 013**	2.100
¾	20	10	350	EA25	**199 183 004**	2.200	**199 183 014**	2.200
1	25	10	700	EA25	**199 183 005**	2.661	**199 183 015**	2.300
1 ¼	32	10	1000	EA25	**199 183 006**	2.600	**199 183 016**	2.600
1 ½	40	10	1600	EA25	**199 183 007**	3.000	**199 183 017**	3.000
2	50	10	3100	EA25	**199 183 008**	3.800	**199 183 018**	3.800
2 ½	65	10	5000	EA45	**199 183 009**	7.400	**199 183 019**	7.400
3	80	10	7000	EA45	**199 183 010**	9.800	**199 183 020**	9.800
4	100	10	11000	EA120	**199 183 011**	13.900	**199 183 021**	13.900

Size (inch)	D (mm)	H (mm)	H1 (mm)	H2 (mm)	H3 (mm)	H5 (mm)	L (mm)	L1 (mm)	L2 (mm)	L4 (mm)	L5 (mm)	L7 (mm)	z (mm)
⅜	50	231	27	64	94	167	92	180	56	25	97	122	60
½	50	231	27	64	94	167	95	180	56	25	97	122	60
¾	58	240	30	73	94	167	110	180	65	25	97	122	69
1	68	240	36	73	94	167	123	180	71	25	97	122	75
1 ¼	84	251	44	84	94	167	146	180	85	45	97	122	89
1 ½	97	251	51	84	94	167	157	180	89	45	97	122	97
2	124	273	64	106	94	167	183	180	101	45	97	122	110
2 ½	166	347	85	156	94	190	233	180	136	70	98	122	144
3	200	358	105	168	94	190	254	180	141	70	98	122	151
4	238	365	123	175	94	190	301	180	164	120	98	122	174

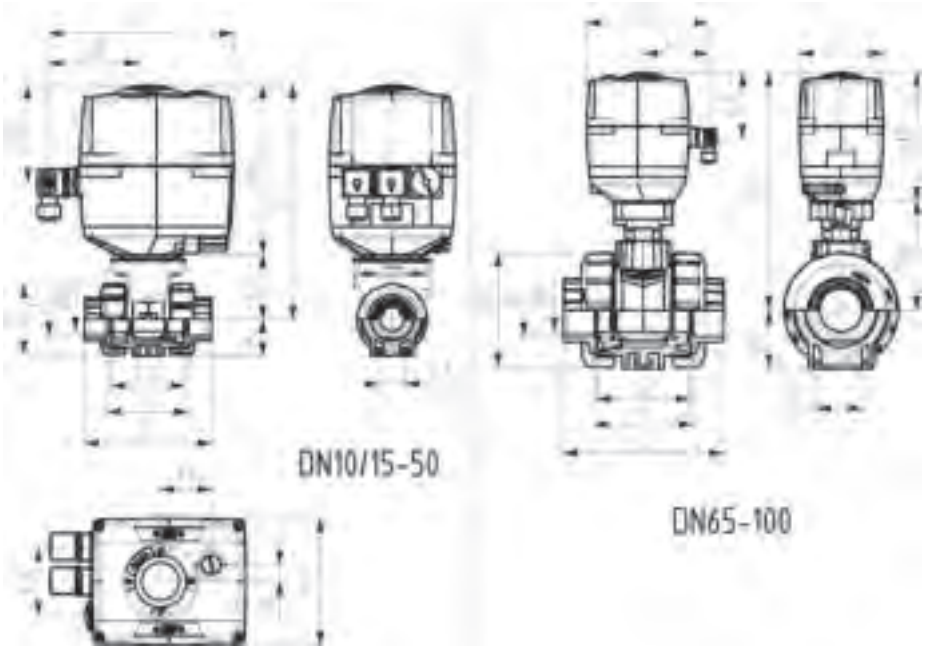





Ball valve type 183 PVC-U 24V
With manual emergency override
With solvent cement sockets Inch BS

Model:

- Voltage 24 V AC/DC
- Factory set control range 90°<)
- Heating element, position feedback (Open/Close/ Middle)
- Integrated stainless steel mounting inserts

Option:

- Other valve and actuator configurations available
- Optional accessories: Fail-safe return unit, Monitoring board, Position controller, Profibus DP board

Size (inch)	DN (mm)	PN (bar)	kv-value (Δp=1 bar) (l/min)	EA	EPDM Code	Weight (kg)	FPM Code	Weight (kg)
⅜	10	10	70	EA25	**199 183 042**	2.100	**199 183 052**	2.100
½	15	10	185	EA25	**199 183 043**	2.100	**199 183 053**	2.100
¾	20	10	350	EA25	**199 183 044**	2.200	**199 183 054**	2.200
1	25	10	700	EA25	**199 183 045**	2.642	**199 183 055**	2.300
1 ¼	32	10	1000	EA25	**199 183 046**	2.600	**199 183 056**	2.899
1 ½	40	10	1600	EA25	**199 183 047**	3.000	**199 183 057**	3.000
2	50	10	3100	EA25	**199 183 048**	3.800	**199 183 058**	3.800
2 ½	65	10	5000	EA45	**199 183 049**	7.400	**199 183 059**	7.400
3	80	10	7000	EA45	**199 183 050**	9.442	**199 183 060**	9.800
4	100	10	11000	EA120	**199 183 051**	13.900	**199 183 061**	13.900

Size (inch)	D (mm)	H (mm)	H1 (mm)	H2 (mm)	H3 (mm)	H5 (mm)	L (mm)	L1 (mm)	L2 (mm)	L4 (mm)	L5 (mm)	L7 (mm)	z (mm)
⅜	50	231	27	64	94	167	92	180	56	25	97	122	60
½	50	231	27	64	94	167	95	180	56	25	97	122	60
¾	58	240	30	73	94	167	110	180	65	25	97	122	69
1	68	240	36	73	94	167	123	180	71	25	97	122	75
1 ¼	84	251	44	84	94	167	146	180	85	45	97	122	89
1 ½	97	251	51	84	94	167	157	180	89	45	97	122	97
2	124	273	64	106	94	167	183	180	101	45	97	122	110
2 ½	166	346	85	156	94	190	233	180	136	70	98	122	144
3	200	358	105	168	94	190	254	180	141	70	98	122	151
4	238	365	123	175	94	190	301	180	164	120	98	122	174

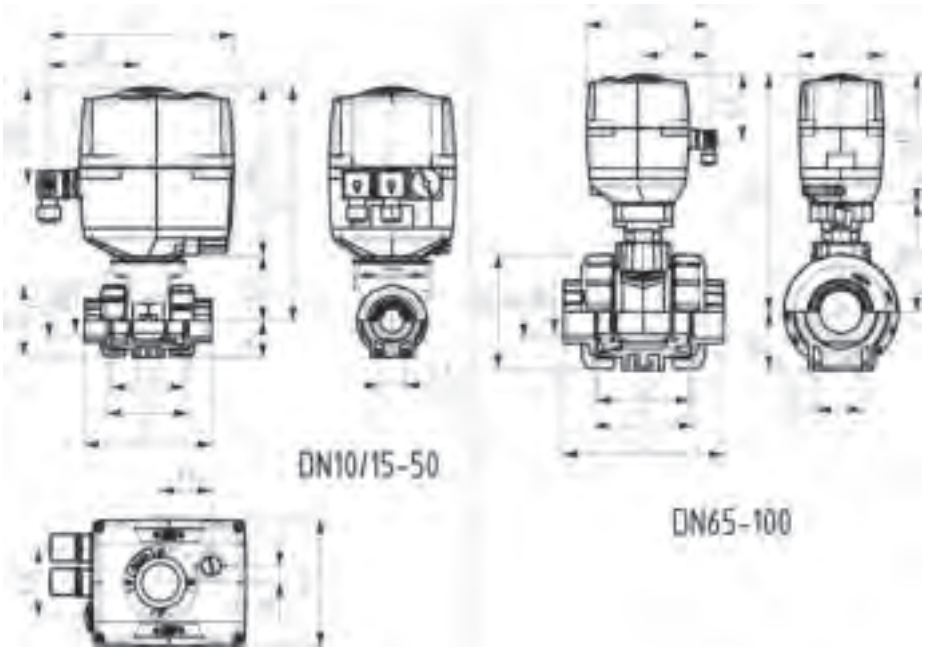

Ball valves electric type 184





Ball valve type 184 PVC-U 100-230V
With manual emergency override
With solvent cement sockets JIS

Model:

- Voltage 100-230 V, 50-60 Hz
- Factory set control range 90°<)
- Heating element, position feedback (Open/Close/ Middle)
- Integrated stainless steel mounting inserts

Option:

- Other valve and actuator configurations available
- Optional accessories: Fail-safe return unit, Monitoring board, Position controller, Profibus DP board

Size (inch)	DN (mm)	PN (bar)	kv-value (Δp=1 bar) (l/min)	EA	EPDM Code	Weight (kg)	FPM Code	Weight (kg)
½	15	10	185	EA25	**199 184 003**	2.100	**199 184 013**	2.100
¾	20	10	350	EA25	**199 184 004**	2.618	**199 184 014**	2.200
1	25	10	700	EA25	**199 184 005**	2.737	**199 184 015**	2.300
1 ¼	32	10	1000	EA25	**199 184 006**	2.600	**199 184 016**	2.600
1 ½	40	10	1600	EA25	**199 184 007**	3.238	**199 184 017**	3.000
2	50	10	3100	EA25	**199 184 008**	3.800	**199 184 018**	3.800
2 ½	65	10	5000	EA45	**199 184 009**	7.300	**199 184 019**	7.300
3	80	10	7000	EA45	**199 184 010**	9.800	**199 184 020**	9.800
4	100	10	11000	EA120	**199 184 011**	14.000	**199 184 021**	14.000

Size (inch)	D (mm)	H (mm)	H1 (mm)	H2 (mm)	H3 (mm)	H5 (mm)	L (mm)	L1 (mm)	L2 (mm)	L4 (mm)	L5 (mm)	L7 (mm)	z (mm)
½	50	231	27	64	94	167	95	180	56	25	97	122	64
¾	58	240	30	73	94	167	110	180	65	25	97	122	72
1	68	240	36	73	94	167	123	180	71	25	97	122	79
1 ¼	84	251	44	84	94	167	146	180	85	45	97	122	94
1 ½	97	251	51	84	94	167	157	180	89	45	97	122	95
2	124	273	64	106	94	167	183	180	101	45	97	122	107
2 ½	166	347	85	156	94	190	233	180	136	70	98	122	144
3	200	358	105	168	94	190	254	180	141	70	98	122	151
4	238	365	123	175	94	190	301	180	164	120	98	122	174

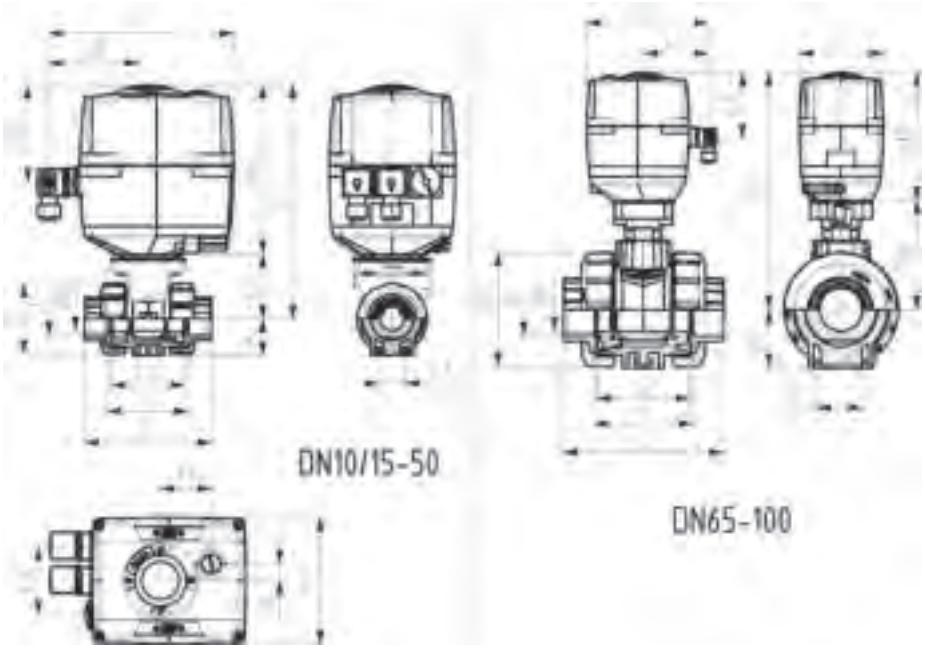



Ball valve type 184 PVC-U 100-230V
With manual emergency override
With fixed flanges JIS

Model:

- Voltage 100-230 V, 50-60 Hz
- Factory set control range 90°<)
- Heating element, position feedback (Open/Close/ Middle)
- Integrated stainless steel mounting inserts

Option:

- Other valve and actuator configurations available
- Optional accessories: Fail-safe return unit, Monitoring board, Position controller, Profibus DP board

Size (inch)	DN (mm)	PN (bar)	kv-value (Δp=1 bar) (l/min)	EA	EPDM Code	Weight (kg)	FPM Code	Weight (kg)
½	15	10	185	EA25	**199 184 043**	2.300	**199 184 053**	2.300
¾	20	10	350	EA25	**199 184 044**	2.500	**199 184 054**	2.500
1	25	10	700	EA25	**199 184 045**	2.700	**199 184 055**	2.700
1 ¼	32	10	1000	EA25	**199 184 046**	3.200	**199 184 056**	3.200
1 ½	40	10	1600	EA25	**199 184 047**	3.700	**199 184 057**	3.700
2	50	10	3100	EA25	**199 184 048**	4.800	**199 184 058**	4.800

Size (inch)	D (mm)	H (mm)	H1 (mm)	H2 (mm)	H3 (mm)	H5 (mm)	H6 (mm)	L (mm)	L1 (mm)	L2 (mm)	L3 (mm)	L4 (mm)	L5 (mm)	L6 (mm)	L7 (mm)
½	58	231	30	73	94	167	53	144	180	65	143	25	97	83	122
¾	50	240	27	64	94	167	48	124	180	56	172	25	97	83	122
1	68	240	36	73	94	167	58	154	180	71	187	25	97	83	122
1 ¼	84	251	44	84	94	167	70	174	180	85	190	45	97	83	122
1 ½	97	251	51	84	94	167	75	194	180	89	212	45	97	83	122
2	124	273	64	106	94	167	83	224	180	101	234	45	97	83	122

Size (inch)	L8 (mm)
½	66
¾	66
1	66
1 ¼	66
1 ½	66
2	66

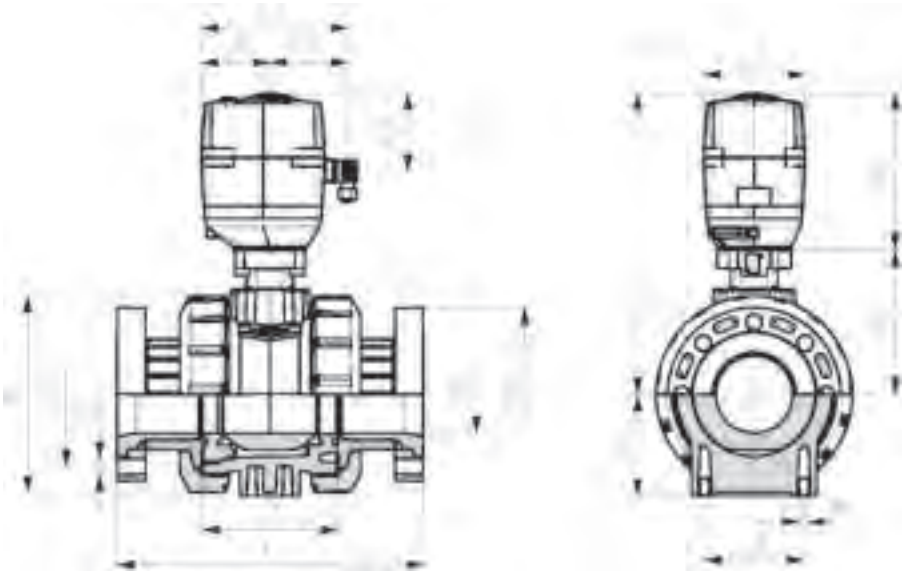



Ball valve type 184 PVC-U 100-230V
With manual emergency override
With backing flanges PVC-U JIS

Model:

- Voltage 100-230 V, 50-60 Hz
- Factory set control range 90°<)
- Heating element, position feedback (Open/Close/ Middle)
- Integrated stainless steel mounting inserts

Option:

- Other valve and actuator configurations available
- Optional accessories: Fail-safe return unit, Monitoring board, Position controller, Profibus DP board

Size (inch)	DN (mm)	PN (bar)	kv-value (Δp=1 bar) (l/min)	EA	EPDM Code	Weight (kg)	FPM Code	Weight (kg)
2 ½	65	10	5000	EA45	**199 184 349**	9.800	**199 184 359**	9.800
3	80	10	7000	EA45	**199 184 350**	13.300	**199 184 360**	13.300
4	100	10	11000	EA120	**199 184 351**	18.900	**199 184 361**	18.900

Size (inch)	D (mm)	H (mm)	H1 (mm)	H2 (mm)	H3 (mm)	H5 (mm)	H6 (mm)	L (mm)	L1 (mm)	L2 (mm)	L3 (mm)	L4 (mm)	L5 (mm)	L6 (mm)	L7 (mm)
2 ½	166	346	85	156	94	190	88	284	180	136	290	70	98	83	122
3	200	358	105	168	94	190	93	300	180	141	310	70	98	83	122
4	238	365	123	175	94	190	105	340	180	164	350	120	98	83	122

Size (inch)	L8 (mm)
2 ½	66
3	66
4	66

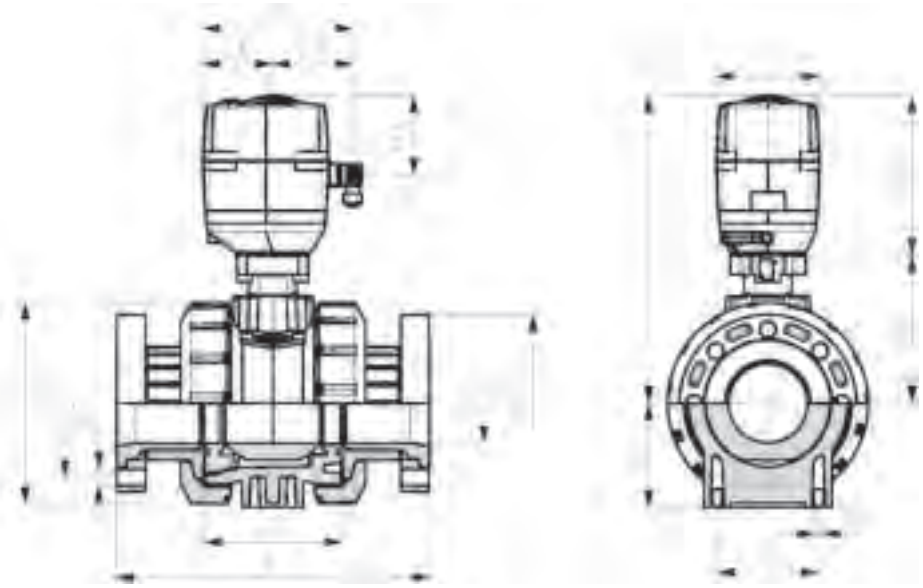





Ball valve type 184 PVC-U 24V
With manual emergency override
With solvent cement sockets JIS

Model:

- Voltage 24 V AC/DC
- Factory set control range 90°<)
- Heating element, position feedback (Open/Close/ Middle)
- Integrated stainless steel mounting inserts

Option:

- Other valve and actuator configurations available
- Optional accessories: Fail-safe return unit, Monitoring board, Position controller, Profibus DP board

Size (inch)	DN (mm)	PN (bar)	kv-100-value (Δp=1 bar) (l/min)	EA	EPDM Code	Weight (kg)	FPM Code	Weight (kg)
½	15	10	185	EA25	**199 184 023**	2.100	**199 184 033**	2.100
¾	20	10	350	EA25	**199 184 024**	2.200	**199 184 034**	2.200
1	25	10	700	EA25	**199 184 025**	2.300	**199 184 035**	2.300
1 ¼	32	10	1000	EA25	**199 184 026**	2.600	**199 184 036**	2.600
1 ½	40	10	1600	EA25	**199 184 027**	3.000	**199 184 037**	3.000
2	50	10	3100	EA25	**199 184 028**	3.800	**199 184 038**	3.800
2 ½	65	10	5000	EA45	**199 184 029**	7.300	**199 184 039**	7.300
3	80	10	7000	EA45	**199 184 030**	9.800	**199 184 040**	9.800
4	100	10	11000	EA120	**199 184 031**	14.000	**199 184 041**	14.000

Size (inch)	D (mm)	H (mm)	H1 (mm)	H2 (mm)	H3 (mm)	H5 (mm)	L (mm)	L1 (mm)	L2 (mm)	L4 (mm)	L5 (mm)	L7 (mm)	z (mm)
½	50	231	27	64	94	167	95	180	56	25	97	122	64
¾	58	240	30	73	94	167	110	180	65	25	97	122	72
1	68	240	36	73	94	167	123	180	71	25	97	122	79
1 ¼	84	251	44	84	94	167	146	180	85	45	97	122	94
1 ½	97	251	51	84	94	167	157	180	89	45	97	122	95
2	124	273	64	106	94	167	183	180	101	45	97	122	107
2 ½	166	346	85	156	94	190	233	180	136	70	98	122	144
3	200	358	105	168	94	190	254	180	141	70	98	122	151
4	238	365	123	175	94	190	301	180	164	120	98	122	174

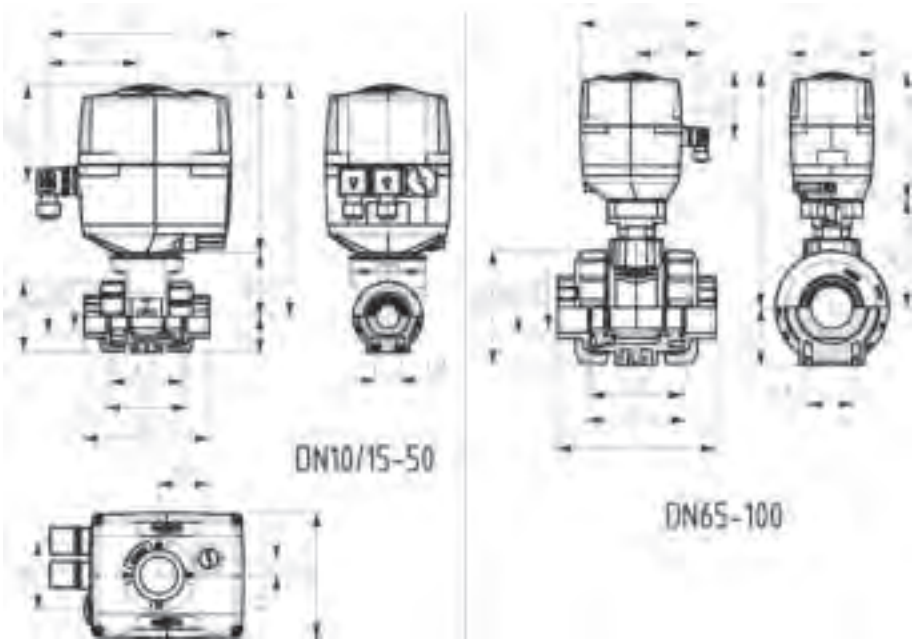

Ball valves electric type 104

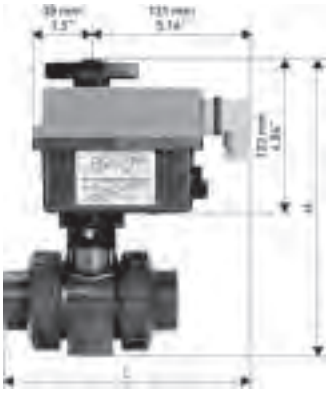

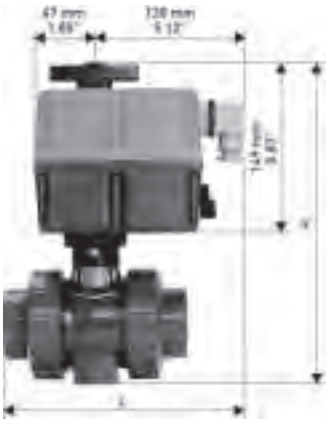

Ball valve type 104 PVC-U 100-230V
With solvent cement sockets Inch BS

Model:

- Voltage 100-230 V, 50-60 Hz
- Control range 90°<)
- For easy installation and removal
- Integrated stainless steel mounting inserts

DN (mm)	PN (bar)	kv-value (Δp=1 bar) (l/min)	EPDM Code	Weight (kg)	FPM Code
10	10	70	**199 104 402**	0.995	**199 104 412**
15	10	185	**199 104 403**	0.995	**199 104 413**
20	10	350	**199 104 404**	1.050	**199 104 414**
25	10	700	**199 104 405**	1.120	**199 104 415**
32	10	1000	**199 104 406**	1.290	**199 104 416**
40	10	1600	**199 104 407**	2.010	**199 104 417**
50	10	3100	**199 104 408**	2.395	**199 104 418**

H (mm)	L (mm)	Type of actuator	Inch (inch)	B (mm)
194	178.5	10Nm	3/8	50
194	178.5	10Nm	1/2	50
207	186.0	10Nm	3/4	58
217	192.5	10Nm	1	68
236	204.5	10Nm	1 1/4	84
275	208.5	20Nm	1 1/2	97
307	221.5	20Nm	2	124

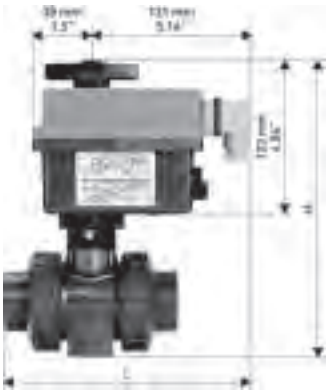

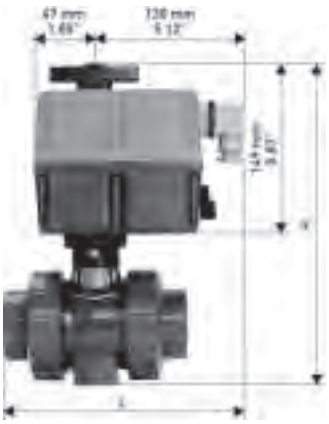

Ball valve type 104 PVC-U 100-230V
With solvent cement sockets JIS

Model:

- Voltage 100-230 V, 50-60 Hz
- Control range 90°<)
- For easy installation and removal
- Integrated stainless steel mounting inserts

DN (mm)	PN (bar)	kv-value (Δp=1 bar) (l/min)	EPDM Code	Weight (kg)	FPM Code
15	10	185	**199 104 483**	0.995	**199 104 493**
20	10	350	**199 104 484**	1.050	**199 104 494**
25	10	700	**199 104 485**	1.120	**199 104 495**
32	10	1000	**199 104 486**	1.290	**199 104 496**
40	10	1600	**199 104 487**	2.010	**199 104 497**
50	10	3100	**199 104 488**	2.395	**199 104 498**

H (mm)	L (mm)	Type of actuator	Inch (inch)	B (mm)
194	178.5	10Nm	1/2	50
204	186.0	10Nm	3/4	58
217	192.5	10Nm	1	68
236	204.5	10Nm	1 1/4	84
275	208.5	20Nm	1 1/2	97
307	221.5	20Nm	2	124

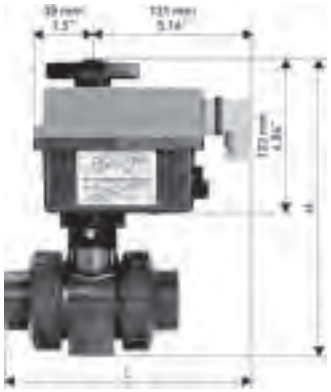

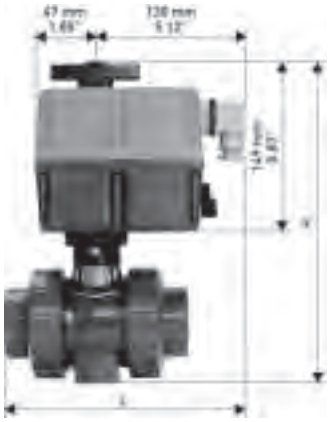

Ball valve type 104 PVC-U 24V
With solvent cement sockets Inch BS

Model:

- Voltage 24 V AC/DC
- Control range 90°<)
- For easy installation and removal
- Integrated stainless steel mounting inserts

DN (mm)	PN (bar)	kv-value (Δp=1 bar) (l/min)	EPDM Code	Weight (kg)	FPM Code
10	70		**199 104 442**	0.995	**199 104 452**
15	185		**199 104 443**	0.995	**199 104 453**
20	350		**199 104 444**	1.050	**199 104 454**
25	700		**199 104 445**	1.120	**199 104 455**
32	1000		**199 104 446**	1.290	**199 104 456**
40	1600		**199 104 447**	2.010	**199 104 457**
50	3100		**199 104 448**	2.395	**199 104 458**

H (mm)	L (mm)	Type of actua-tor	Inch (inch)	B (mm)
194	178.5	10Nm	3/8	50
194	178.5	10Nm	1/2	50
207	186.0	10Nm	3/4	58
217	192.5	10Nm	1	68
236	204.5	10Nm	1 1/4	84
275	208.5	20Nm	1 1/2	97
307	221.5	20Nm	2	124

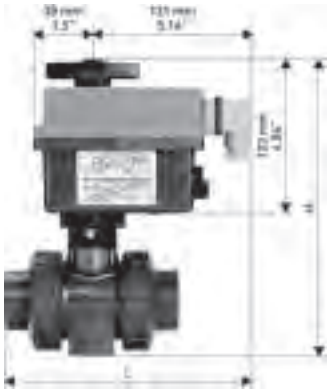

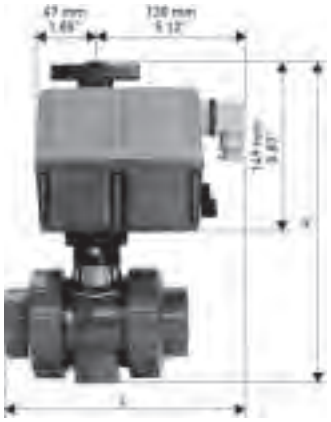

Ball valve type 104 PVC-U 24V
With solvent cement sockets JIS

Model:

- Voltage 24 V AC/DC
- Control range 90°<)
- For easy installation and removal
- Integrated stainless steel mounting inserts

DN (mm)	PN (bar)	kv-value (Δp=1 bar) (l/min)	EPDM Code	Weight (kg)	FPM Code
15	10	185	**199 104 863**	0.995	**199 104 873**
20	10	350	**199 104 864**	1.050	**199 104 874**
25	10	700	**199 104 865**	1.120	**199 104 875**
32	10	1000	**199 104 866**	1.290	**199 104 876**
40	10	1600	**199 104 867**	2.010	**199 104 877**
50	10	3100	**199 104 868**	2.395	**199 104 878**

H (mm)	L (mm)	Type of actua-tor	Inch (inch)	B (mm)
194	178.5	10Nm	1/2	50
207	186.0	10Nm	3/4	58
217	192.5	10Nm	1	68
236	204.5	10Nm	1 1/4	84
275	208.5	20Nm	1 1/2	97
307	221.5	20Nm	2	124

Ball valves pneumatic

Ball valves pneumatic type 234



Ball valve type 234 PVC-U FC (Fail safe to close)
With manual override
With solvent cement sockets Inch BS

Model:

- Built on with pneumatic actuator PA11 (DN10/15-25), PA21 (DN32-50)
- Control time 90°<) 1-2s
- For easy installation and removal
- Integrated stainless steel mounting inserts

Option:

- Individual configuration of the valve (see diagram)

Size (inch)	DN (mm)	PN (bar)	kv-value (Δp=1 bar) (l/min)	EPDM Code	Weight (kg)	FPM Code	Weight (kg)
⅜	10	10	70	**199 234 002**	1.500	**199 234 012**	1.500
½	15	10	185	**199 234 003**	1.500	**199 234 013**	1.500
¾	20	10	350	**199 234 004**	1.362	**199 234 014**	1.600
1	25	10	700	**199 234 005**	1.468	**199 234 015**	1.469
1 ¼	32	10	1000	**199 234 006**	2.800	**199 234 016**	2.800
1 ½	40	10	1600	**199 234 007**	3.100	**199 234 017**	3.100
2	50	10	3100	**199 234 008**	4.000	**199 234 018**	3.452

Size (inch)	D (mm)	H (mm)	H1 (mm)	H2 (mm)	H3 (mm)	H4 (mm)	H5 (mm)	L (mm)	L1 (mm)	L2 (mm)	L4 (mm)	L5 (mm)	L6 (mm)	L7 (mm)	z (mm)
⅜	50	159	27	62	168	40	77	92	194	56	25	261	76	48	60
½	50	159	27	62	168	40	77	95	194	56	25	261	76	48	60
¾	58	168	30	71	168	40	77	110	194	65	25	261	76	48	69
1	68	168	36	71	168	40	77	123	194	71	25	261	76	48	75
1 ¼	84	202	44	84	187	51	99	146	224	85	45	305	95	59	89
1 ½	97	202	51	84	187	51	99	157	224	89	45	305	95	59	97
2	124	225	64	106	187	51	99	183	224	101	45	305	95	59	110

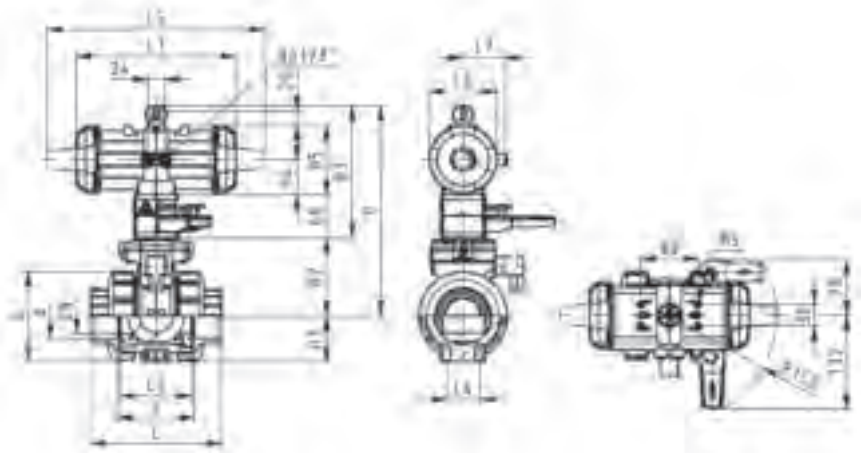



Ball valve type 234 PVC-U FO (Fail safe to open)
With manual override
With solvent cement sockets Inch BS

Model:

- Built on with pneumatic actuator PA11 (DN10/15-25), PA21 (DN32-50)
- Control time 90°<) 1-2s
- For easy installation and removal
- Integrated stainless steel mounting inserts

Option:

- Individual configuration of the valve (see diagram)

Size (inch)	DN (mm)	PN (bar)	kv-value (Δp=1 bar) (l/min)	EPDM Code	Weight (kg)	FPM Code	Weight (kg)
⅜	10	10	70	**199 234 042**	1.500	**199 234 052**	1.500
½	15	10	185	**199 234 043**	1.500	**199 234 053**	1.500
¾	20	10	350	**199 234 044**	1.600	**199 234 054**	1.600
1	25	10	700	**199 234 045**	1.700	**199 234 055**	1.700
1 ¼	32	10	1000	**199 234 046**	2.800	**199 234 056**	2.800
1 ½	40	10	1600	**199 234 047**	3.100	**199 234 057**	3.100
2	50	10	3100	**199 234 048**	4.000	**199 234 058**	4.000

Size (inch)	D (mm)	H (mm)	H1 (mm)	H2 (mm)	H3 (mm)	H4 (mm)	H5 (mm)	L (mm)	L1 (mm)	L2 (mm)	L4 (mm)	L5 (mm)	L6 (mm)	L7 (mm)	z (mm)
⅜	50	159	27	62	168	40	77	92	194	56	25	261	76	48	60
½	50	159	27	62	168	40	77	95	194	56	25	261	76	48	60
¾	58	168	30	71	168	40	77	110	194	65	25	261	76	48	69
1	68	168	36	71	168	40	77	123	194	71	25	261	76	48	75
1 ¼	84	202	44	84	187	51	99	146	224	85	45	305	95	59	89
1 ½	97	202	51	84	187	51	99	157	224	89	45	305	95	59	97
2	124	225	64	106	187	51	99	183	224	101	45	305	95	59	110

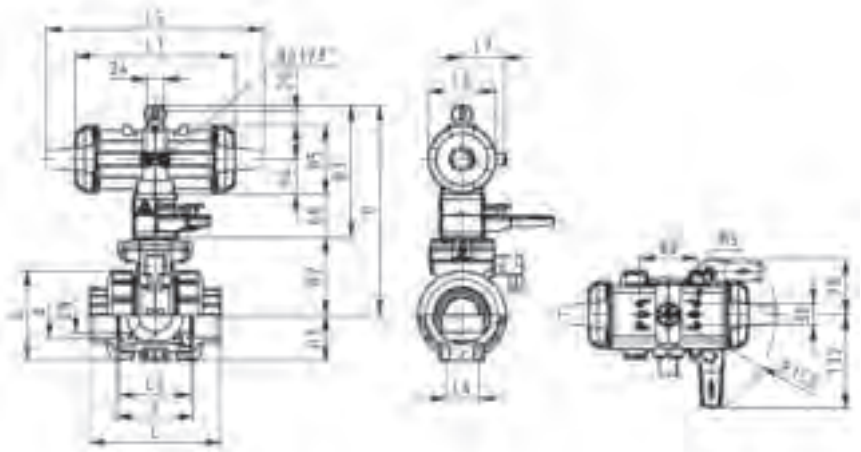



Ball valve type 234 PVC-U DA (Double acting)
With manual override
With solvent cement sockets Inch BS

Model:

- Built on with pneumatic actuator PA11 (DN10/15-25), PA21 (DN32-50)
- Control time 90°<) 1-2s
- For easy installation and removal
- Integrated stainless steel mounting inserts

Option:

- Individual configuration of the valve (see diagram)

Size (inch)	DN (mm)	PN (bar)	kv-value (Δp=1 bar) (l/min)	EPDM Code	Weight (kg)	FPM Code	Weight (kg)
⅜	10	10	70	**199 234 082**	1.500	**199 234 092**	1.500
½	15	10	185	**199 234 083**	1.500	**199 234 093**	1.500
¾	20	10	350	**199 234 084**	1.600	**199 234 094**	1.600
1	25	10	700	**199 234 085**	1.237	**199 234 095**	1.700
1 ¼	32	10	1000	**199 234 086**	2.800	**199 234 096**	2.800
1 ½	40	10	1600	**199 234 087**	3.100	**199 234 097**	3.100
2	50	10	3100	**199 234 088**	4.000	**199 234 098**	4.000

Size (inch)	D (mm)	H (mm)	H1 (mm)	H2 (mm)	H3 (mm)	H4 (mm)	H5 (mm)	L (mm)	L1 (mm)	L2 (mm)	L4 (mm)	L5 (mm)	L6 (mm)	L7 (mm)	z (mm)
⅜	50	159	27	62	168	40	77	92	194	56	25	261	76	48	60
½	50	159	27	62	168	40	77	95	194	56	25	261	76	48	60
¾	58	168	30	71	168	40	77	110	194	65	25	261	76	48	69
1	68	168	36	71	168	40	77	123	194	71	25	261	76	48	75
1 ¼	84	202	44	84	187	51	99	146	224	85	45	305	95	59	89
1 ½	97	202	51	84	187	51	99	157	224	89	45	305	95	59	97
2	124	225	64	106	187	51	99	183	224	101	45	305	95	59	110

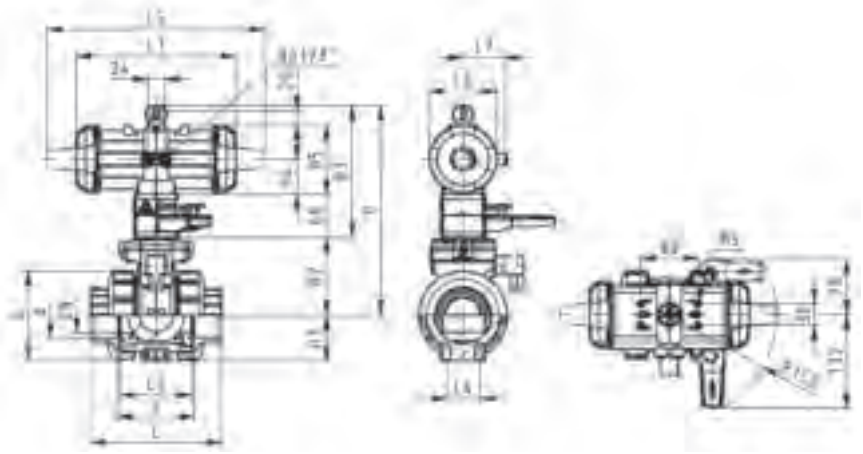



Ball valve type 234 PVC-U FC (Fail safe to close)
Without manual override
With solvent cement sockets Inch BS

Model:

- Control time 90°<) 1-2s
- Assignment of actuators: PA11 (DN10/15-25), PA21 (DN32-50), PA30 (DN65), PA40 (DN80), PA40 (DN100)
- For easy installation and removal
- Integrated stainless steel mounting inserts

Option:

- Individual configuration of the valve (see diagram)



Size (inch)	DN (mm)	PN (bar)	kv-value (Δp=1 bar) (l/min)	EPDM Code	Weight (kg)	FPM Code	Weight (kg)
⅜	10	10	70	**199 234 122**	1.200	**199 234 132**	1.200
½	15	10	185	**199 234 123**	1.200	**199 234 133**	1.200
¾	20	10	350	**199 234 124**	1.300	**199 234 134**	1.300
1	25	10	700	**199 234 125**	1.400	**199 234 135**	1.400
1 ¼	32	10	1000	**199 234 126**	2.500	**199 234 136**	2.500
1 ½	40	10	1600	**199 234 127**	2.800	**199 234 137**	2.800
2	50	10	3100	**199 234 128**	3.700	**199 234 138**	3.700
2 ½	65	10	5000	**199 234 129**	7.800	**199 234 139**	7.800
3	80	10	7000	**199 234 130**	10.200	**199 234 140**	10.200
4	100	10	11000	**199 234 131**	15.300	**199 234 141**	15.300

Size (inch)	D (mm)	H (mm)	H1 (mm)	H2 (mm)	H5 (mm)	L (mm)	L1 (mm)	L2 (mm)	L4 (mm)	L5 (mm)	L6 (mm)	L7 (mm)	z (mm)
⅜	50	159	27	62	77	92	194	56	25	261	76	48	60
½	50	159	27	62	77	95	194	56	25	261	76	48	60
¾	58	168	30	71	77	110	194	65	25	261	76	48	69
1	68	168	36	71	77	123	194	71	25	261	76	48	75
1 ¼	84	202	44	84	99	146	224	85	45	305	95	59	89
1 ½	97	202	51	84	99	157	224	89	45	305	95	59	97
2	124	225	64	106	99	183	224	101	45	305	95	59	110
2 ½	166	262	85	156	70	233		136	70	276	65		144
3	200	281	105	168	78	254		141	70	341	72		151
4	238	292	123	175	86	301		164	120	369	80		174

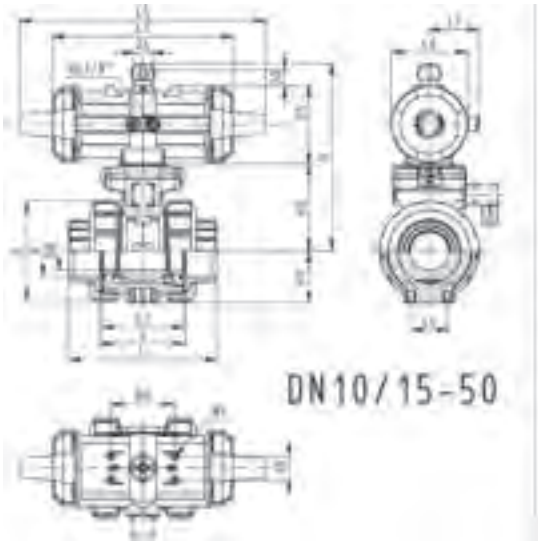

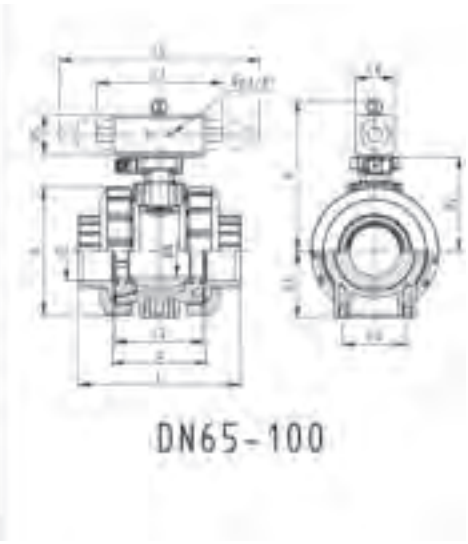



DN10/15 - 50

Ball valve type 234 PVC-U FO (Fail safe to open)
Without manual override
With solvent cement sockets Inch BS

Model:

- Control time 90°<) 1-2s
- Assignment of actuators: PA11 (DN10/15-25), PA21 (DN32-50), PA30 (DN65), PA40 (DN80), PA40 (DN100)
- For easy installation and removal
- Integrated stainless steel mounting inserts

Option:

- Individual configuration of the valve (see diagram)



Size (inch)	DN (mm)	PN (bar)	kv-value (Δp=1 bar) (l/min)	EPDM Code	Weight (kg)	FPM Code	Weight (kg)
⅜	10	10	70	**199 234 162**	1.200	**199 234 172**	1.200
½	15	10	185	**199 234 163**	1.200	**199 234 173**	1.200
¾	20	10	350	**199 234 164**	1.300	**199 234 174**	1.300
1	25	10	700	**199 234 165**	1.400	**199 234 175**	1.400
1 ¼	32	10	1000	**199 234 166**	2.500	**199 234 176**	2.500
1 ½	40	10	1600	**199 234 167**	2.800	**199 234 177**	2.800
2	50	10	3100	**199 234 168**	3.700	**199 234 178**	3.700
2 ½	65	10	5000	**199 234 169**	7.800	**199 234 179**	7.800
3	80	10	7000	**199 234 170**	10.200	**199 234 180**	10.200
4	100	10	11000	**199 234 171**	15.300	**199 234 181**	15.300

Size (inch)	D (mm)	H (mm)	H1 (mm)	H2 (mm)	H5 (mm)	L (mm)	L1 (mm)	L2 (mm)	L4 (mm)	L5 (mm)	L6 (mm)	L7 (mm)	z (mm)
⅜	50	159	27	62	77	92	194	56	25	261	76	48	60
½	50	159	27	62	77	95	194	56	25	261	76	48	60
¾	58	168	30	71	77	110	194	65	25	261	76	48	69
1	68	168	36	71	77	123	194	71	25	261	76	48	75
1 ¼	84	202	44	84	99	146	224	85	45	305	95	59	89
1 ½	97	202	51	84	99	157	224	89	45	305	95	59	97
2	124	225	64	106	99	183	224	101	45	305	95	59	110
2 ½	166	262	85	156	70	233		136	70	276	65		144
3	200	281	105	168	78	254		141	70	341	72		151
4	238	292	123	175	86	301		164	120	369	80		174

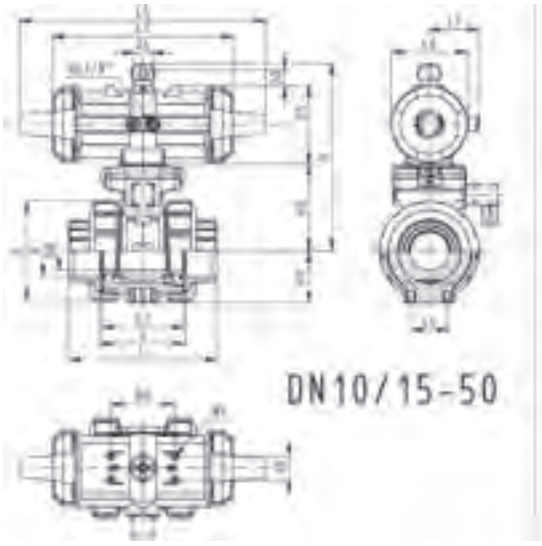

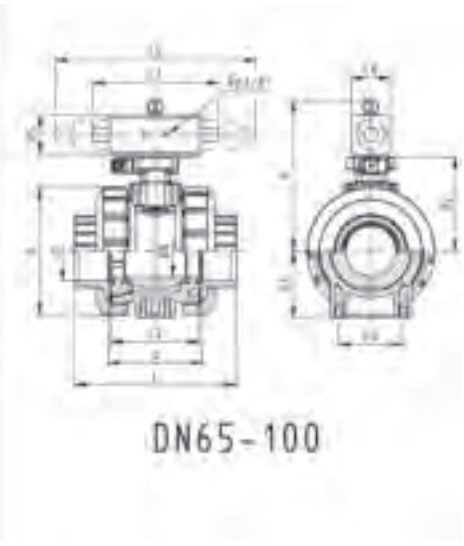



Ball valve type 234 PVC-U DA (Double acting)
Without manual override
With solvent cement sockets Inch BS

Model:

- Control time 90°<) 1-2s
- Assignment of actuators: PA11 (DN10/15-25), PA21 (DN32-50), PA35 (DN65), PA40 (DN80), PA45 (DN100)
- For easy installation and removal
- Integrated stainless steel mounting inserts

Option:

- Individual configuration of the valve (see diagram)



Size (inch)	DN (mm)	PN (bar)	kv-value (Δp=1 bar) (l/min)	EPDM Code	Weight (kg)	FPM Code	Weight (kg)
⅜	10	10	70	**199 234 202**	1.200	**199 234 212**	1.200
½	15	10	185	**199 234 203**	1.200	**199 234 213**	1.200
¾	20	10	350	**199 234 204**	1.300	**199 234 214**	1.300
1	25	10	700	**199 234 205**	1.400	**199 234 215**	1.400
1 ¼	32	10	1000	**199 234 206**	2.500	**199 234 216**	2.500
1 ½	40	10	1600	**199 234 207**	2.800	**199 234 217**	2.800
2	50	10	3100	**199 234 208**	3.700	**199 234 218**	3.700
2 ½	65	10	5000	**199 234 209**	6.600	**199 234 219**	6.600
3	80	10	7000	**199 234 210**	9.600	**199 234 220**	9.600
4	100	10	11000	**199 234 211**	13.600	**199 234 221**	13.600

Size (inch)	D (mm)	H (mm)	H1 (mm)	H2 (mm)	H5 (mm)	L (mm)	L1 (mm)	L2 (mm)	L4 (mm)	L5 (mm)	L6 (mm)	L7 (mm)	z (mm)
⅜	50	159	27	62	77	92	194	56	25	261	76	48	60
½	50	159	27	62	77	95	194	56	25	261	76	48	60
¾	58	168	30	71	77	110	194	65	25	261	76	48	69
1	68	168	36	71	77	123	194	71	25	261	76	48	75
1 ¼	84	202	44	84	99	146	224	85	45	305	95	59	89
1 ½	97	202	51	84	99	157	224	89	45	305	95	59	97
2	124	225	64	106	99	183	224	101	45	305	95	59	110
2 ½	166	257	85	156	66	233	144	136	70		60		144
3	200	274	105	168	70	254	152	141	70		65		151
4	238	273	123	175	78	301	169	164	120		72		174

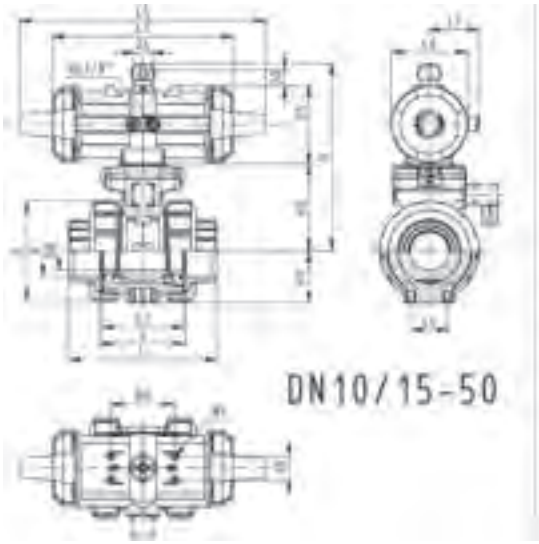

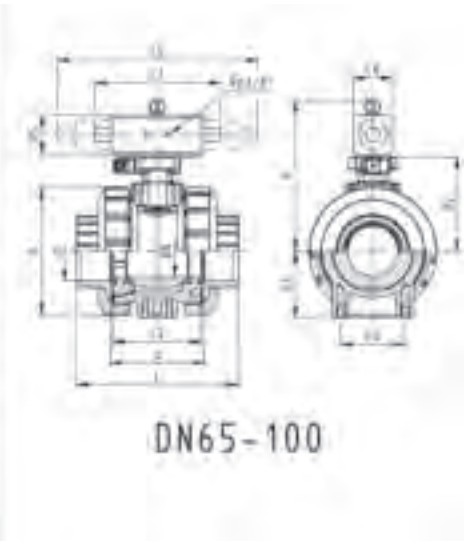

Ball valves pneumatic type 235



Ball valve type 235 PVC-U FC (Fail safe to close)
With manual override
With solvent cement sockets JIS

Model:

- Built on with pneumatic actuator PA11 (DN10/15-25), PA21 (DN32-50)
- Control time 90°<) 1-2s
- For easy installation and removal
- Integrated stainless steel mounting inserts

Option:

- Individual configuration of the valve (see diagram)

Size (inch)	DN (mm)	PN (bar)	kv-value (Δp=1 bar) (l/min)	EPDM Code	Weight (kg)	FPM Code	Weight (kg)
½	15	10	185	**199 235 003**	1.500	**199 235 013**	1.500
¾	20	10	350	**199 235 004**	1.600	**199 235 014**	1.600
1	25	10	700	**199 235 005**	1.700	**199 235 015**	1.700
1 ¼	32	10	1000	**199 235 006**	2.800	**199 235 016**	2.800
1 ½	40	10	1600	**199 235 007**	3.100	**199 235 017**	3.100
2	50	10	3100	**199 235 008**	4.000	**199 235 018**	4.000

Size (inch)	D (mm)	H (mm)	H1 (mm)	H2 (mm)	H3 (mm)	H4 (mm)	H5 (mm)	L (mm)	L1 (mm)	L2 (mm)	L4 (mm)	L5 (mm)	L6 (mm)	L7 (mm)	z (mm)
½	50	159	27	62	168	40	77	95	194	56	25	261	76	48	64
¾	58	168	30	71	168	40	77	110	194	65	25	261	76	48	72
1	68	168	36	71	168	40	77	123	194	71	25	261	76	48	79
1 ¼	84	202	44	84	187	51	99	146	224	85	45	305	95	59	94
1 ½	97	202	51	84	187	51	99	157	224	89	45	305	95	59	95
2	124	225	64	106	187	51	99	183	224	101	45	305	95	59	107

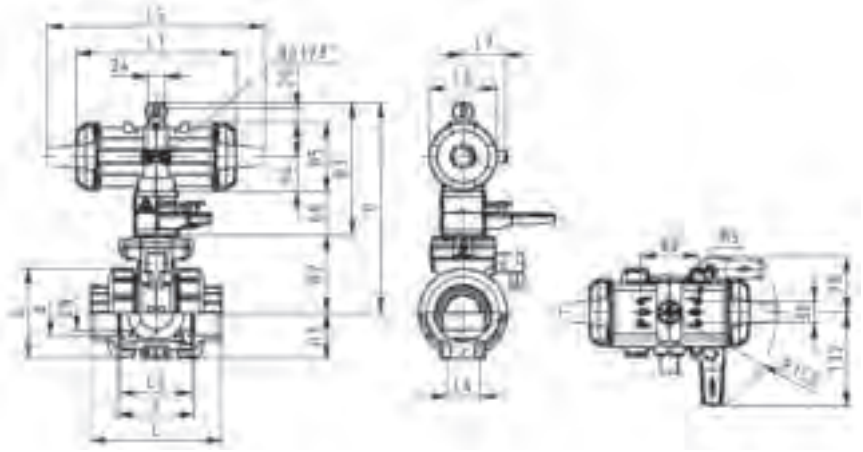



Ball valve type 235 PVC-U FC (Fail safe to close)
With manual override
With threaded sockets Rc

Model:

- Built on with pneumatic actuator PA11 (DN10/15-25), PA21 (DN32-50)
- Control time 90°<) 1-2s
- For easy installation and removal
- Integrated stainless steel mounting inserts

Option:

- Individual configuration of the valve (see diagram)

Size (inch)	DN (mm)	PN (bar)	kv-value (Δp=1 bar) (l/min)	EPDM Code	Weight (kg)	FPM Code	Weight (kg)
½	15	10	185	**199 235 543**	1.500	**199 235 553**	1.500
¾	20	10	350	**199 235 544**	1.600	**199 235 554**	1.600
1	25	10	700	**199 235 545**	1.700	**199 235 555**	1.700
1 ¼	32	10	1000	**199 235 546**	2.800	**199 235 556**	2.800
1 ½	40	10	1600	**199 235 547**	3.100	**199 235 557**	3.100
2	50	10	3100	**199 235 548**	4.000	**199 235 558**	4.000

Size (inch)	D (mm)	H (mm)	H1 (mm)	H2 (mm)	H3 (mm)	H4 (mm)	H5 (mm)	L (mm)	L1 (mm)	L2 (mm)	L4 (mm)	L5 (mm)	L6 (mm)	L7 (mm)	z (mm)
½	50	159	27	62	168	40	77	95	194	56	25	261	76	48	64
¾	58	168	30	71	168	40	77	110	194	65	25	261	76	48	72
1	68	168	36	71	168	40	77	123	194	71	25	261	76	48	79
1 ¼	84	202	44	84	187	51	99	146	224	85	45	305	95	59	94
1 ½	97	202	51	84	187	51	99	157	224	89	45	305	95	59	95
2	124	225	64	106	187	51	99	183	224	101	45	305	95	59	107

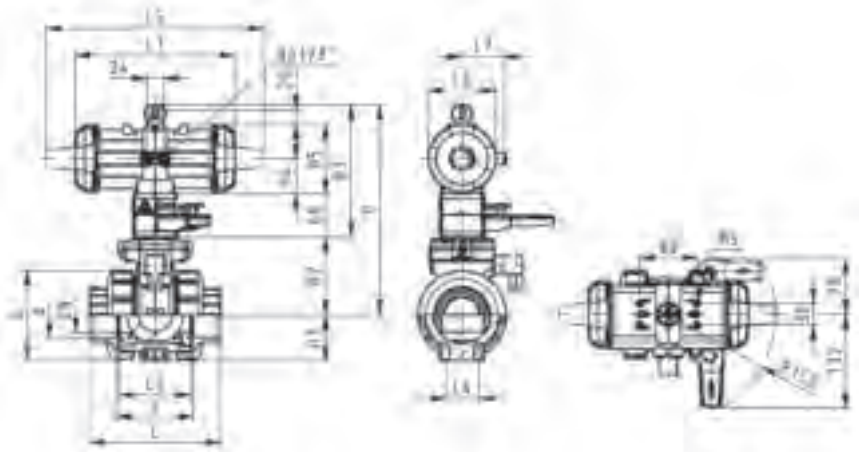





Ball valve type 235 PVC-U FC (Fail safe to close)
With manual override
With fixed flanges JIS

Model:

- Built on with pneumatic actuator PA11 (DN10/15-25), PA21 (DN32-50)
- Control time 90°<) 1-2s
- For easy installation and removal
- Integrated stainless steel mounting inserts

Option:

- Individual configuration of the valve (see diagram)

Size (inch)	DN (mm)	PN (bar)	kv-value (Δp=1 bar) (l/min)	EPDM Code	Weight (kg)	FPM Code	Weight (kg)
½	15	10	185	**199 235 123**	1.700	**199 235 133**	1.700
¾	20	10	350	**199 235 124**	1.900	**199 235 134**	1.900
1	25	10	700	**199 235 125**	2.100	**199 235 135**	2.100
1 ¼	32	10	1000	**199 235 126**	3.400	**199 235 136**	3.400
1 ½	40	10	1600	**199 235 127**	3.800	**199 235 137**	3.800
2	50	10	3100	**199 235 128**	4.900	**199 235 138**	4.900

Size (inch)	D (mm)	H (mm)	H1 (mm)	H2 (mm)	H3 (mm)	H4 (mm)	H5 (mm)	H6 (mm)	L (mm)	L1 (mm)	L2 (mm)	L3 (mm)	L4 (mm)	L5 (mm)	L6 (mm)
½	50	159	27	62	168	40	77	48	124	194	56	143	25	261	76
¾	58	168	30	71	168	40	77	53	144	194	65	172	25	261	76
1	68	168	36	71	168	40	77	58	154	194	71	187	25	261	76
1 ¼	84	202	44	84	187	51	99	70	174	224	85	190	45	305	95
1 ½	97	202	51	84	187	51	99	75	194	224	89	212	45	305	95
2	124	225	64	106	187	51	99	83	224	224	101	234	45	305	95

Size (inch)	L7 (mm)
½	48
¾	48
1	48
1 ¼	59
1 ½	59
2	59

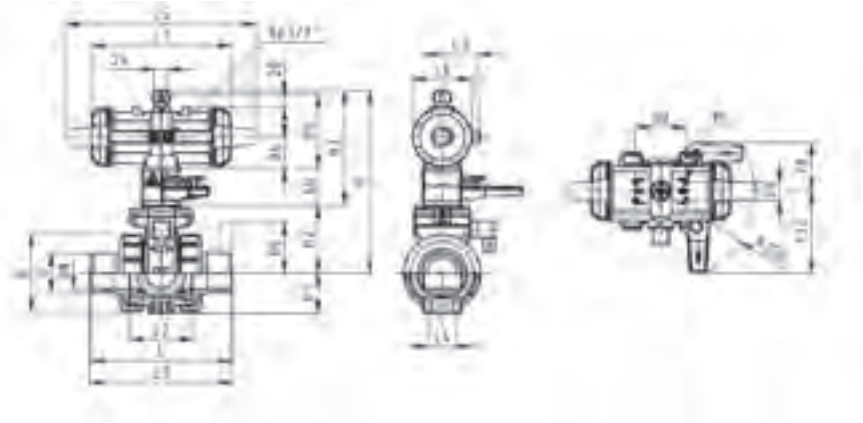



Ball valve type 235 PVC-U FO (Fail safe to open)
With manual override
With solvent cement sockets JIS

Model:

- Built on with pneumatic actuator PA11 (DN10/15-25), PA21 (DN32-50)
- Control time 90°<) 1-2s
- For easy installation and removal
- Integrated stainless steel mounting inserts

Option:

- Individual configuration of the valve (see diagram)

Size (inch)	DN (mm)	PN (bar)	kv-value (Δp=1 bar) (l/min)	EPDM Code	Weight (kg)	FPM Code	Weight (kg)
½	15	10	185	**199 235 023**	1.500	**199 235 033**	1.500
¾	20	10	350	**199 235 024**	1.600	**199 235 034**	1.600
1	25	10	700	**199 235 025**	1.700	**199 235 035**	1.700
1 ¼	32	10	1000	**199 235 026**	2.800	**199 235 036**	2.800
1 ½	40	10	1600	**199 235 027**	3.100	**199 235 037**	3.100
2	50	10	3100	**199 235 028**	4.000	**199 235 038**	4.000

Size (inch)	D (mm)	H (mm)	H1 (mm)	H2 (mm)	H3 (mm)	H4 (mm)	H5 (mm)	L (mm)	L1 (mm)	L2 (mm)	L4 (mm)	L5 (mm)	L6 (mm)	L7 (mm)	z (mm)
½	50	159	27	62	168	40	77	95	194	56	25	261	76	48	64
¾	58	168	30	71	168	40	77	110	194	65	25	261	76	48	72
1	68	168	36	71	168	40	77	123	194	71	25	261	76	48	79
1 ¼	84	202	44	84	187	51	99	146	224	85	45	305	95	59	94
1 ½	97	202	51	84	187	51	99	157	224	89	45	305	95	59	95
2	124	225	64	106	187	51	99	183	224	101	45	305	95	59	107

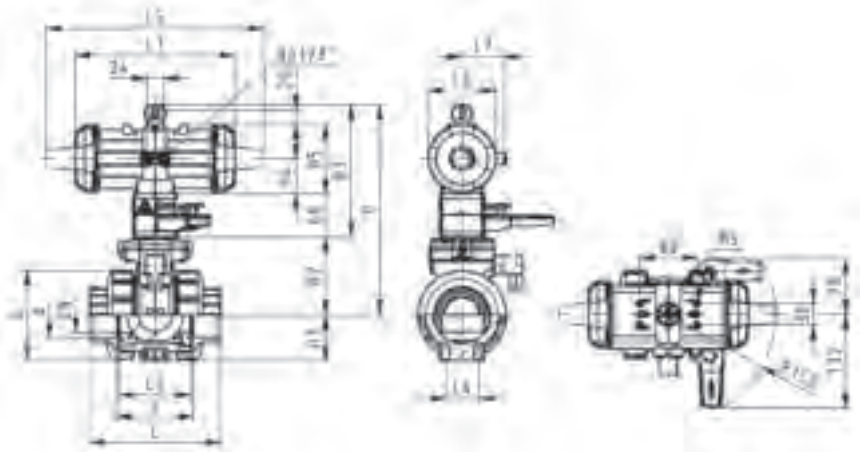



Ball valve type 235 PVC-U FO (Fail safe to open)
With manual override
With threaded sockets Rc

Model:

- Built on with pneumatic actuator PA11 (DN10/15-25), PA21 (DN32-50)
- Control time 90°<) 1-2s
- For easy installation and removal
- Integrated stainless steel mounting inserts

Option:

- Individual configuration of the valve (see diagram)

Size (inch)	DN (mm)	PN (bar)	kv-value (Δp=1 bar) (l/min)	EPDM Code	Weight (kg)	FPM Code	Weight (kg)
½	15	10	185	**199 235 563**	1.500	**199 235 573**	1.500
¾	20	10	350	**199 235 564**	1.600	**199 235 574**	1.600
1	25	10	700	**199 235 565**	1.700	**199 235 575**	1.700
1 ¼	32	10	1000	**199 235 566**	2.800	**199 235 576**	2.800
1 ½	40	10	1600	**199 235 567**	3.100	**199 235 577**	3.100
2	50	10	3100	**199 235 568**	4.000	**199 235 578**	4.000

Size (inch)	D (mm)	H (mm)	H1 (mm)	H2 (mm)	H3 (mm)	H4 (mm)	H5 (mm)	L (mm)	L1 (mm)	L2 (mm)	L3 (mm)	L4 (mm)	L5 (mm)	L6 (mm)	L7 (mm)
½	50	159	27	62	168	40	77	95	194	56	130	25	261	76	48
¾	58	168	30	71	168	40	77	110	194	65	150	25	261	76	48
1	68	168	36	71	168	40	77	123	194	71	160	25	261	76	48
1 ¼	84	202	44	84	187	51	99	146	224	85	180	45	305	95	59
1 ½	97	202	51	84	187	51	99	157	224	89	200	45	305	95	59
2	124	225	64	106	187	51	99	183	224	101	230	45	305	95	59

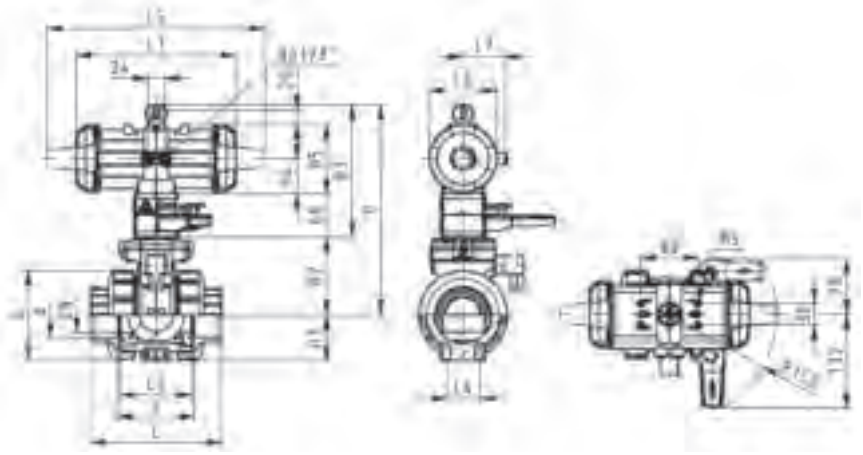



Ball valve type 235 PVC-U FO (Fail safe to open)
With manual override
With fixed flanges JIS

Model:

- Built on with pneumatic actuator PA11 (DN10/15-25), PA21 (DN32-50)
- Control time 90°<) 1-2s
- For easy installation and removal
- Integrated stainless steel mounting inserts

Option:

- Individual configuration of the valve (see diagram)

Size (inch)	DN (mm)	PN (bar)	kv-value (Δp=1 bar) (l/min)	EPDM Code	Weight (kg)	FPM Code	Weight (kg)
½	15	10	185	**199 235 143**	1.700	**199 235 153**	1.700
¾	20	10	350	**199 235 144**	1.900	**199 235 154**	1.900
1	25	10	700	**199 235 145**	2.100	**199 235 155**	2.100
1 ¼	32	10	1000	**199 235 146**	3.400	**199 235 156**	3.400
1 ½	40	10	1600	**199 235 147**	3.800	**199 235 157**	3.800
2	50	10	3100	**199 235 148**	4.900	**199 235 158**	4.900

Size (inch)	D (mm)	H (mm)	H1 (mm)	H2 (mm)	H3 (mm)	H4 (mm)	H5 (mm)	H6 (mm)	L (mm)	L1 (mm)	L2 (mm)	L3 (mm)	L4 (mm)	L5 (mm)	L6 (mm)
½	50	159	27	62	168	40	77	48	124	194	56	143	25	261	76
¾	58	168	30	71	168	40	77	53	144	194	65	171	25	261	76
1	68	168	36	71	168	40	77	58	154	194	71	187	25	261	76
1 ¼	84	202	44	84	187	51	99	70	174	224	85	190	45	305	95
1 ½	97	202	51	84	187	51	99	75	194	224	89	212	45	305	95
2	124	225	64	106	187	51	99	83	224	224	101	234	45	305	95

Size (inch)	L7 (mm)
½	48
¾	48
1	48
1 ¼	59
1 ½	59
2	59

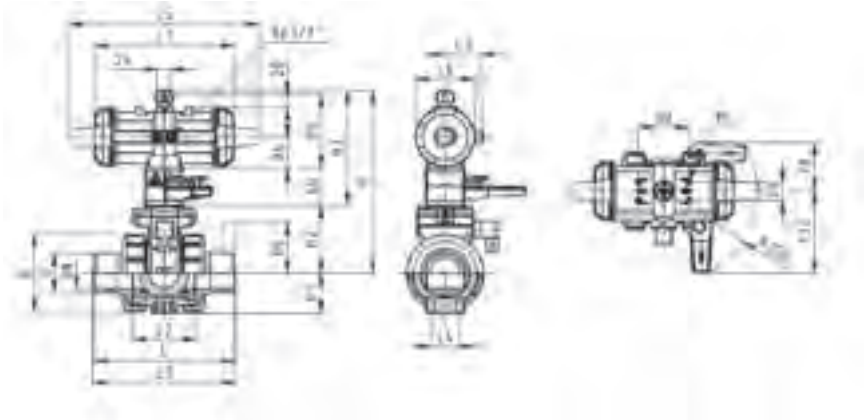



Ball valve type 235 PVC-U DA (Double acting)
With manual override
With solvent cement sockets JIS

Model:

- Built on with pneumatic actuator PA11 (DN10/15-25), PA21 (DN32-50)
- Control time 90°<) 1-2s
- For easy installation and removal
- Integrated stainless steel mounting inserts

Option:

- Individual configuration of the valve (see diagram)

Size (inch)	DN (mm)	PN (bar)	kv-value (Δp=1 bar) (l/min)	EPDM Code	Weight (kg)	FPM Code	Weight (kg)
½	15	10	185	**199 235 043**	1.500	**199 235 053**	1.500
¾	20	10	350	**199 235 044**	1.600	**199 235 054**	1.600
1	25	10	700	**199 235 045**	1.700	**199 235 055**	1.700
1 ¼	32	10	1000	**199 235 046**	2.800	**199 235 056**	2.800
1 ½	40	10	1600	**199 235 047**	3.100	**199 235 057**	3.100
2	50	10	3100	**199 235 048**	4.000	**199 235 058**	4.000

Size (inch)	D (mm)	H (mm)	H1 (mm)	H2 (mm)	H3 (mm)	H4 (mm)	H5 (mm)	L (mm)	L1 (mm)	L2 (mm)	L4 (mm)	L5 (mm)	L6 (mm)	L7 (mm)	z (mm)
½	50	159	27	62	168	40	77	95	194	56	25	261	76	48	64
¾	58	168	30	71	168	40	77	110	194	65	25	261	76	48	72
1	68	168	36	71	168	40	77	123	194	71	25	261	76	48	79
1 ¼	84	202	44	84	187	51	99	146	224	85	45	305	95	59	94
1 ½	97	202	51	84	187	51	99	157	224	89	45	305	95	59	95
2	124	225	64	106	187	51	99	183	224	101	45	305	95	59	107

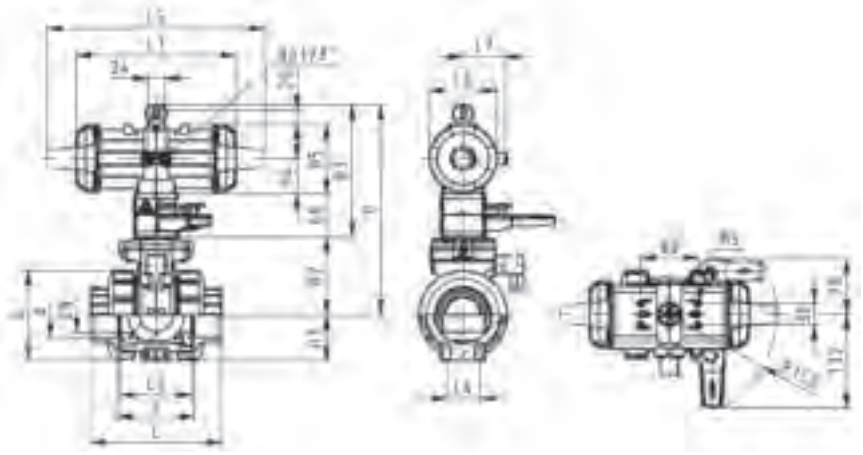



Ball valve type 235 PVC-U DA (Double acting)
With manual override
With threaded sockets Rc

Model:

- Built on with pneumatic actuator PA11 (DN10/15-25), PA21 (DN32-50)
- Control time 90°<) 1-2s
- For easy installation and removal
- Integrated stainless steel mounting inserts

Option:

- Individual configuration of the valve (see diagram)

Size (inch)	DN (mm)	PN (bar)	kv-value (Δp=1 bar) (l/min)	EPDM Code	Weight (kg)	FPM Code	Weight (kg)
½	15	10	185	**199 235 583**	1.500	**199 235 593**	1.500
¾	20	10	350	**199 235 584**	1.600	**199 235 594**	1.600
1	25	10	700	**199 235 585**	1.700	**199 235 595**	1.700
1 ¼	32	10	1000	**199 235 586**	2.800	**199 235 596**	2.800
1 ½	40	10	1600	**199 235 587**	3.100	**199 235 597**	3.100
2	50	10	3100	**199 235 588**	4.000	**199 235 598**	4.000

Size (inch)	D (mm)	H (mm)	H1 (mm)	H2 (mm)	H3 (mm)	H4 (mm)	H5 (mm)	L (mm)	L1 (mm)	L2 (mm)	L3 (mm)	L4 (mm)	L5 (mm)	L6 (mm)	L7 (mm)
½	50	159	27	62	168	40	77	95	194	56	130	25	261	76	48
¾	58	168	30	71	168	40	77	110	194	65	150	25	261	76	48
1	68	168	36	71	168	40	77	123	194	71	160	25	261	76	48
1 ¼	84	202	44	84	187	51	99	146	224	85	180	45	305	95	59
1 ½	97	202	51	84	187	51	99	157	224	89	200	45	305	95	59
2	124	225	64	106	187	51	99	183	224	101	230	45	305	95	59

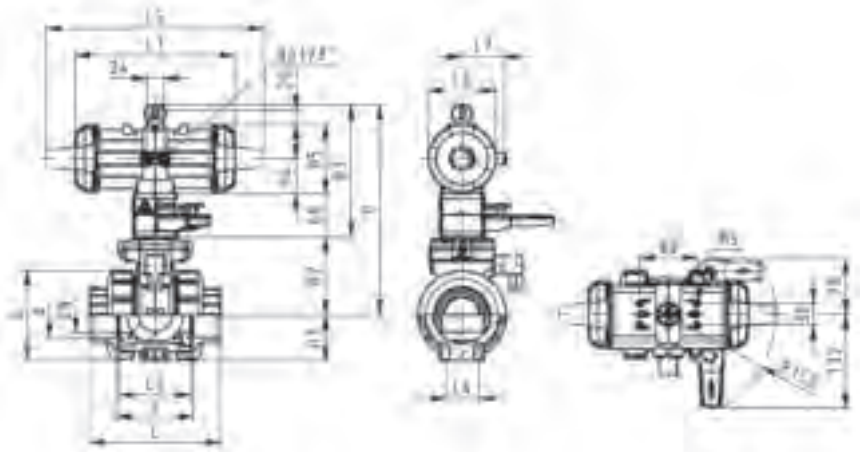



Ball valve type 235 PVC-U DA (Double acting)
With manual override
With fixed flanges JIS

Model:

- Built on with pneumatic actuator PA11 (DN10/15-25), PA21 (DN32-50)
- Control time 90°<) 1-2s
- For easy installation and removal
- Integrated stainless steel mounting inserts

Option:

- Individual configuration of the valve (see diagram)

Size (inch)	DN (mm)	PN (bar)	kv-value (Δp=1 bar) (l/min)	EPDM Code	Weight (kg)	FPM Code	Weight (kg)
½	15	10	185	**199 235 163**	1.700	**199 235 173**	1.700
¾	20	10	350	**199 235 164**	1.900	**199 235 174**	1.900
1	25	10	700	**199 235 165**	2.100	**199 235 175**	2.100
1 ¼	32	10	1000	**199 235 166**	3.400	**199 235 176**	3.400
1 ½	40	10	1600	**199 235 167**	3.800	**199 235 177**	3.800
2	50	10	3100	**199 235 168**	4.900	**199 235 178**	4.900

Size (inch)	D (mm)	H (mm)	H1 (mm)	H2 (mm)	H3 (mm)	H4 (mm)	H5 (mm)	H6 (mm)	L (mm)	L1 (mm)	L2 (mm)	L3 (mm)	L4 (mm)	L5 (mm)	L6 (mm)
½	50	159	27	62	168	40	77	48	124	194	56	143	25	261	76
¾	58	168	30	71	168	40	77	53	144	194	65	171	25	261	76
1	68	168	36	71	168	40	77	58	154	194	71	187	25	261	76
1 ¼	84	202	44	84	187	51	99	70	174	224	85	190	45	305	95
1 ½	97	202	51	84	187	51	99	75	194	224	89	212	45	305	95
2	124	225	64	106	187	51	99	83	224	224	101	234	45	305	95

Size (inch)	L7 (mm)
½	48
¾	48
1	48
1 ¼	59
1 ½	59
2	59

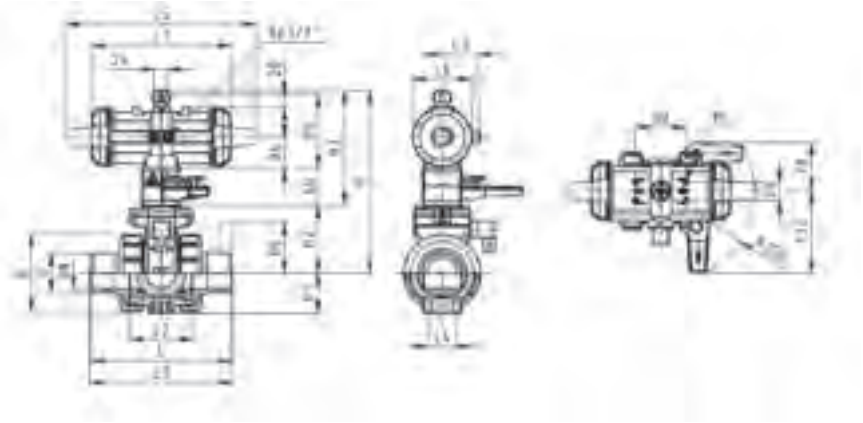



Ball valve type 235 PVC-U FC (Fail safe to close)
Without manual override
With solvent cement sockets JIS

Model:

- Control time 90°<) 1-2s
- Assignment of actuators: PA11 (DN10/15-25), PA21 (DN32-50), PA30 (DN65), PA40 (DN80), PA40 (DN100)
- For easy installation and removal
- Integrated stainless steel mounting inserts

Option:

- Individual configuration of the valve (see diagram)



Size (inch)	DN (mm)	PN (bar)	kv-value (Δp=1 bar) (l/min)	EPDM Code	Weight (kg)	FPM Code	Weight (kg)
½	15	10	185	**199 235 063**	1.200	**199 235 073**	1.200
¾	20	10	350	**199 235 064**	1.300	**199 235 074**	1.300
1	25	10	700	**199 235 065**	1.400	**199 235 075**	1.400
1 ¼	32	10	1000	**199 235 066**	2.500	**199 235 076**	2.500
1 ½	40	10	1600	**199 235 067**	2.800	**199 235 077**	2.800
2	50	10	3100	**199 235 068**	3.700	**199 235 078**	3.700
2 ½	65	10	5000	**199 235 069**	7.700	**199 235 079**	7.700
3	80	10	7000	**199 235 070**	10.200	**199 235 080**	10.200
4	100	10	11000	**199 235 071**	15.400	**199 235 081**	15.400

Size (inch)	D (mm)	H (mm)	H1 (mm)	H2 (mm)	H5 (mm)	L (mm)	L1 (mm)	L2 (mm)	L4 (mm)	L5 (mm)	L6 (mm)	L7 (mm)	z (mm)
½	50	159	27	62	77	95	194	56	25	261	76	48	64
¾	58	168	30	71	77	110	194	65	25	261	76	48	72
1	68	168	36	71	77	123	194	71	25	261	76	48	79
1 ¼	84	202	44	84	99	146	224	85	45	305	95	59	94
1 ½	97	202	51	84	99	157	224	89	45	305	95	59	95
2	124	225	64	106	99	183	224	101	45	305	95	59	107
2 ½	144	262	85	156	70	233		136	70	276	65		144
3	151	281	105	168	78	254		141	70	341	72		151
4	174	292	123	175	86	301		164	120	369	80		174

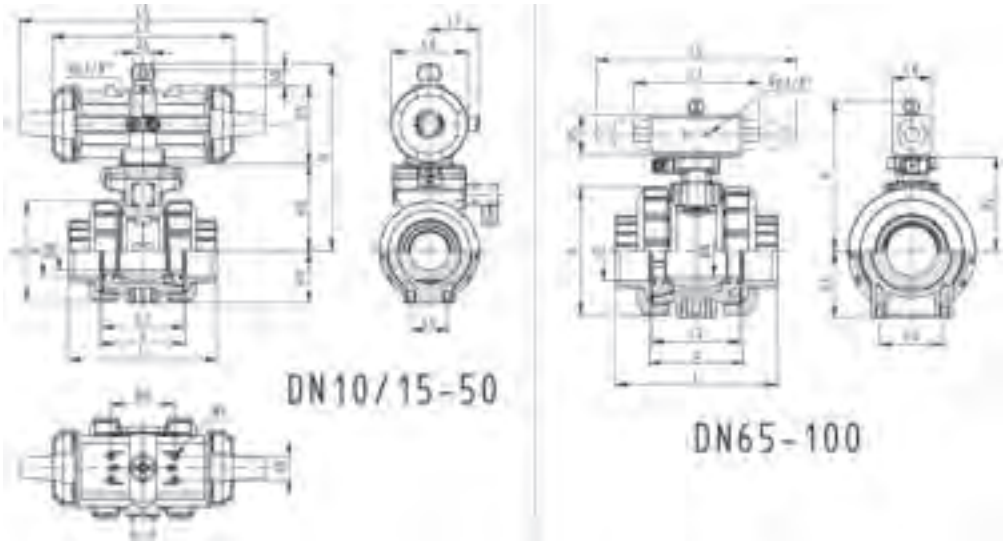



Ball valve type 235 PVC-U FC (Fail safe to close)
Without manual override
With threaded sockets Rc

Model:

- Control time 90°<) 1-2s
- Assignment of actuators: PA11 (DN10/15-25), PA21 (DN32-50), PA30 (DN65), PA40 (DN80), PA40 (DN100)
- For easy installation and removal
- Integrated stainless steel mounting inserts

Option:

- Individual configuration of the valve (see diagram)



Size (inch)	DN (mm)	PN (bar)	kv-value (Δp=1 bar) (l/min)	EPDM Code	Weight (kg)	FPM Code	Weight (kg)
½	15	10	185	**199 235 603**	1.200	**199 235 613**	1.200
¾	20	10	350	**199 235 604**	1.300	**199 235 614**	1.300
1	25	10	700	**199 235 605**	1.400	**199 235 615**	1.400
1 ¼	32	10	1000	**199 235 606**	2.500	**199 235 616**	2.500
1 ½	40	10	1600	**199 235 607**	2.800	**199 235 617**	2.800
2	50	10	3100	**199 235 608**	3.700	**199 235 618**	3.700
2 ½	65	10	5000	**199 235 609**	7.800	**199 235 619**	7.800
3	80	10	7000	**199 235 610**	10.300	**199 235 620**	10.300
4	100	10	11000	**199 235 611**	15.500	**199 235 621**	15.500

Size (inch)	D (mm)	H (mm)	H1 (mm)	H2 (mm)	H5 (mm)	L (mm)	L1 (mm)	L2 (mm)	L4 (mm)	L5 (mm)	L6 (mm)	L7 (mm)	z (mm)
½	50	159	27	62	77	95	194	56	25	261	76	48	64
¾	58	168	30	71	77	110	194	65	25	261	76	48	72
1	68	168	36	71	77	123	194	71	25	261	76	48	79
1 ¼	84	202	44	84	99	146	224	85	45	305	95	59	94
1 ½	97	202	51	84	99	157	224	89	45	305	95	59	95
2	124	225	64	106	99	183	224	101	45	305	95	59	107
2 ½	166	262	85	156	70	233		136	70	276	65		144
3	200	281	105	168	78	254		141	70	341	72		151
4	238	292	123	175	86	301		164	120	369	80		174

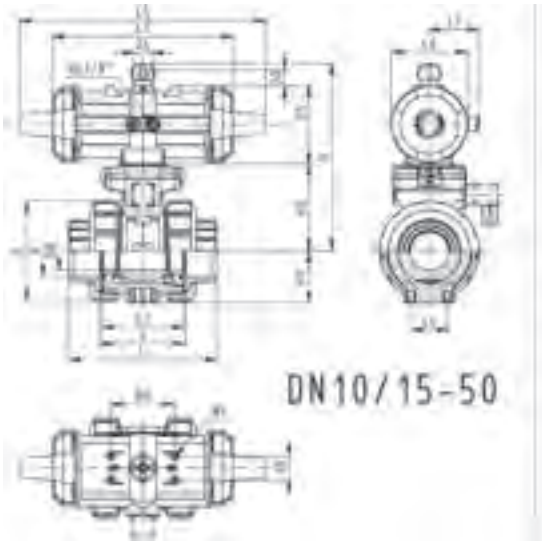

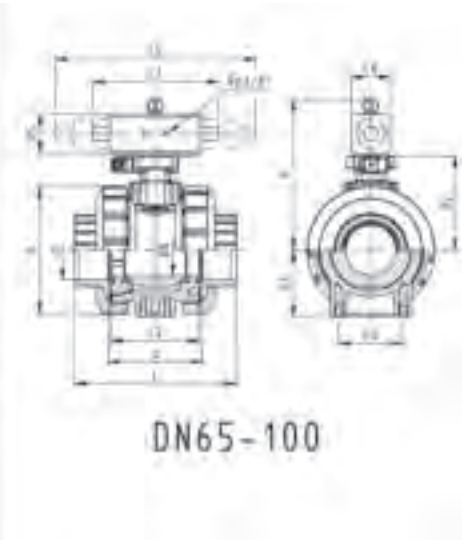



Ball valve type 235 PVC-U FC (Fail safe to close)
Without manual override
With fixed flanges JIS

Model:

- Built on with pneumatic actuator PA11 (DN10/15-25), PA21 (DN32-50)
- Control time 90°<) 1-2s
- For easy installation and removal
- Integrated stainless steel mounting inserts

Option:

- Individual configuration of the valve (see diagram)

Size (inch)	DN (mm)	PN (bar)	kv-value (Δp=1 bar) (l/min)	EPDM Code	Weight (kg)	FPM Code	Weight (kg)
½	15	10	185	**199 235 183**	1.700	**199 235 193**	1.700
¾	20	10	350	**199 235 184**	1.900	**199 235 194**	1.900
1	25	10	700	**199 235 185**	2.100	**199 235 195**	2.100
1 ¼	32	10	1000	**199 235 186**	3.400	**199 235 196**	3.400
1 ½	40	10	1600	**199 235 187**	3.800	**199 235 197**	3.800
2	50	10	3100	**199 235 188**	4.900	**199 235 198**	4.900

Size (inch)	D (mm)	H (mm)	H1 (mm)	H2 (mm)	H4 (mm)	H5 (mm)	H6 (mm)	L (mm)	L1 (mm)	L2 (mm)	L3 (mm)	L4 (mm)	L5 (mm)	L6 (mm)	L7 (mm)
½	50	159	27	62	40	77	48	124	194	56	143	25	261	76	48
¾	58	168	30	71	40	77	53	144	194	65	172	25	261	76	48
1	68	168	36	71	40	77	58	154	194	71	187	25	261	76	48
1 ¼	84	202	44	84	51	99	70	174	224	85	190	45	305	95	59
1 ½	97	202	51	84	51	99	75	194	224	89	212	45	305	95	59
2	124	225	64	106	51	99	83	224	224	101	234	45	305	95	59

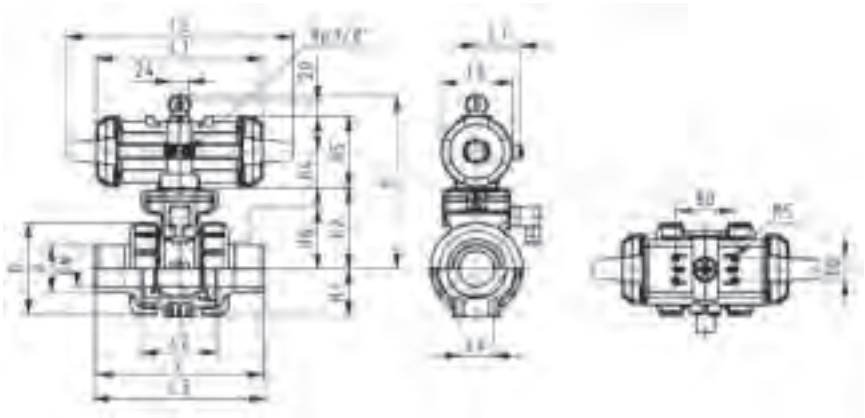



Ball valve type 235 PVC-U FC (Fail safe to close)
Without manual override
With backing flanges PVC-U JIS

Model:

- Control time 90°<) 1-2s
- Assignment of actuators: PA11 (DN10/15-25), PA21 (DN32-50), PA30 (DN65), PA40 (DN80), PA40 (DN100)
- For easy installation and removal
- Integrated stainless steel mounting inserts
- Overall length according to EN 558
- Connecting dimensions: JIS B 2220, 10K

Option:

- Individual configuration of the valve (see diagram)

Size (inch)	DN (mm)	PN (bar)	kv-value (Δp=1 bar) (l/min)	EPDM Code	Weight (kg)	FPM Code	Weight (kg)
2 ½	65	10	5000	**199 235 769**	10.200	**199 235 779**	10.200
3	80	10	7000	**199 235 770**	13.700	**199 235 780**	13.700
4	100	10	11000	**199 235 771**	20.300	**199 235 781**	20.300

Size (inch)	D (mm)	H (mm)	H1 (mm)	H2 (mm)	H5 (mm)	H6 (mm)	L (mm)	L2 (mm)	L3 (mm)	L4 (mm)	L5 (mm)	L6 (mm)
2 ½	166	262	85	156	70	88	284	136	290	70	276	65
3	200	281	105	168	78	93	300	141	310	70	341	72
4	238	292	123	175	86	105	340	164	350	120	369	80

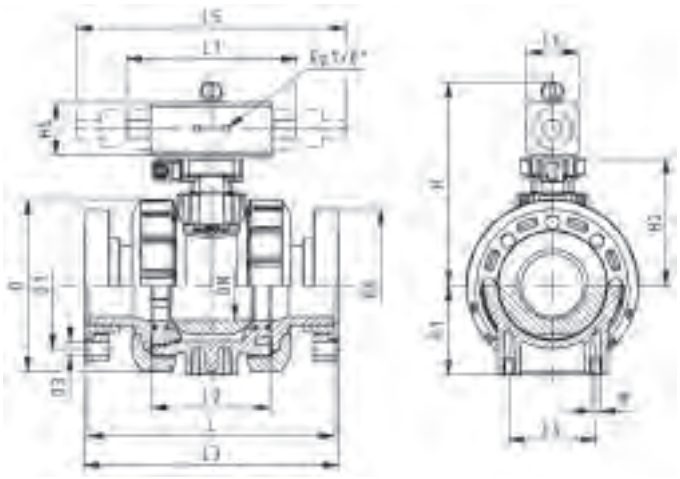



Ball valve type 235 PVC-U FO (Fail safe to open)
Without manual override
With solvent cement sockets JIS

Model:

- Control time 90°<) 1-2s
- Assignment of actuators: PA11 (DN10/15-25), PA21 (DN32-50), PA30 (DN65), PA40 (DN80), PA40 (DN100)
- For easy installation and removal
- Integrated stainless steel mounting inserts

Option:

- Individual configuration of the valve (see diagram)



Size (inch)	DN (mm)	PN (bar)	kv-value (Δp=1 bar) (l/min)	EPDM Code	Weight (kg)	FPM Code	Weight (kg)
½	15	10	185	**199 235 083**	1.200	**199 235 093**	1.200
¾	20	10	350	**199 235 084**	1.300	**199 235 094**	1.300
1	25	10	700	**199 235 085**	1.400	**199 235 095**	1.400
1 ¼	32	10	1000	**199 235 086**	2.500	**199 235 096**	2.500
1 ½	40	10	1600	**199 235 087**	2.800	**199 235 097**	2.800
2	50	10	3100	**199 235 088**	3.700	**199 235 098**	3.700
2 ½	65	10	5000	**199 235 089**	7.700	**199 235 099**	7.700
3	80	10	7000	**199 235 090**	10.200	**199 235 100**	10.200
4	100	10	11000	**199 235 091**	15.400	**199 235 101**	15.400

Size (inch)	D (mm)	H (mm)	H1 (mm)	H2 (mm)	H5 (mm)	L (mm)	L1 (mm)	L2 (mm)	L4 (mm)	L5 (mm)	L6 (mm)	L7 (mm)	z (mm)
½	50	159	27	62	77	95	194	56	25	261	76	48	64
¾	58	168	30	71	77	110	194	65	25	261	76	48	72
1	68	168	36	71	77	123	194	71	25	261	76	48	79
1 ¼	84	202	44	84	99	146	224	85	45	305	95	59	94
1 ½	97	202	51	84	99	157	224	89	45	305	95	59	95
2	124	225	64	106	99	183	224	101	45	305	95	59	107
2 ½	166	262	85	156	70	233		136	70	276	65		144
3	200	281	105	168	78	254		141	70	341	72		151
4	238	292	123	175	86	301		164	120	369	80		174

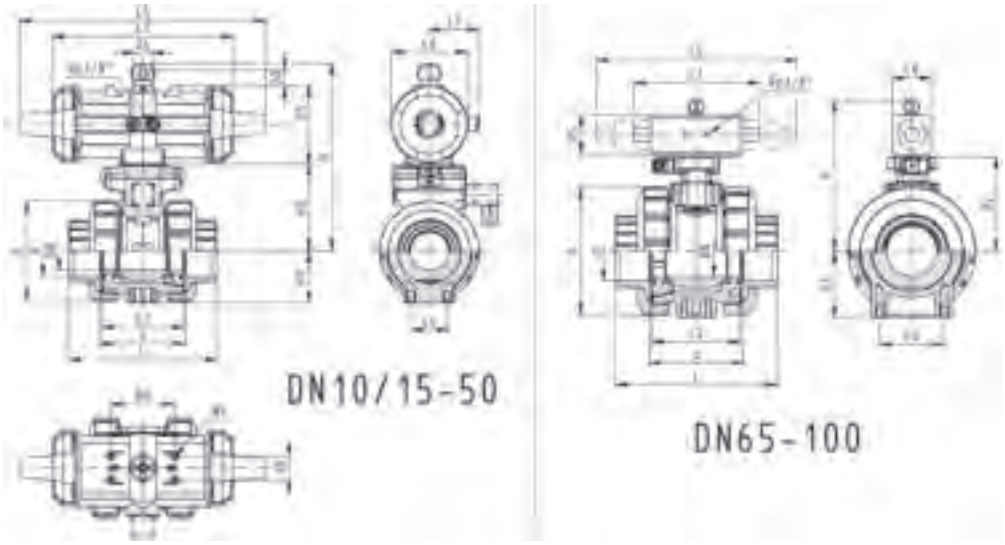



Ball valve type 235 PVC-U FO (Fail safe to open)
Without manual override
With threaded sockets Rc

Model:

- Control time 90°<) 1-2s
- Assignment of actuators: PA11 (DN10/15-25), PA21 (DN32-50), PA30 (DN65), PA40 (DN80), PA40 (DN100)
- For easy installation and removal
- Integrated stainless steel mounting inserts

Option:

- Individual configuration of the valve (see diagram)



Size (inch)	DN (mm)	PN (bar)	kv-value (Δp=1 bar) (l/min)	EPDM Code	Weight (kg)	FPM Code	Weight (kg)
½	15	10	185	**199 235 623**	1.200	**199 235 633**	1.200
¾	20	10	350	**199 235 624**	1.300	**199 235 634**	1.300
1	25	10	700	**199 235 625**	1.400	**199 235 635**	1.400
1 ¼	32	10	1000	**199 235 626**	2.500	**199 235 636**	2.500
1 ½	40	10	1600	**199 235 627**	2.800	**199 235 637**	2.800
2	50	10	3100	**199 235 628**	3.700	**199 235 638**	3.700
2 ½	65	10	5000	**199 235 629**	7.800	**199 235 639**	7.800
3	80	10	7000	**199 235 630**	10.300	**199 235 640**	10.300
4	100	10	11000	**199 235 631**	15.500	**199 235 641**	15.500

Size (inch)	D (mm)	H (mm)	H1 (mm)	H2 (mm)	H5 (mm)	L (mm)	L1 (mm)	L2 (mm)	L4 (mm)	L5 (mm)	L6 (mm)	L7 (mm)	z (mm)
½	50	159	27	62	77	95	194	56	25	261	76	48	64
¾	58	168	30	71	77	110	194	65	25	261	76	48	72
1	68	168	36	71	77	123	194	71	25	261	76	48	79
1 ¼	84	202	44	84	99	146	224	85	45	305	95	59	94
1 ½	97	202	51	84	99	157	224	89	45	305	95	59	95
2	124	225	64	106	99	183	224	101	45	305	95	59	107
2 ½	166	262	85	156	70	233		136	70	276	65		144
3	200	281	105	168	78	254		141	70	341	72		151
4	238	292	123	175	86	301		164	120	369	80		174

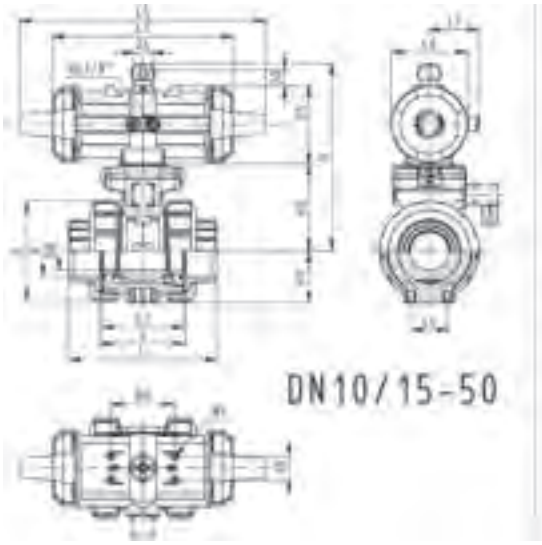

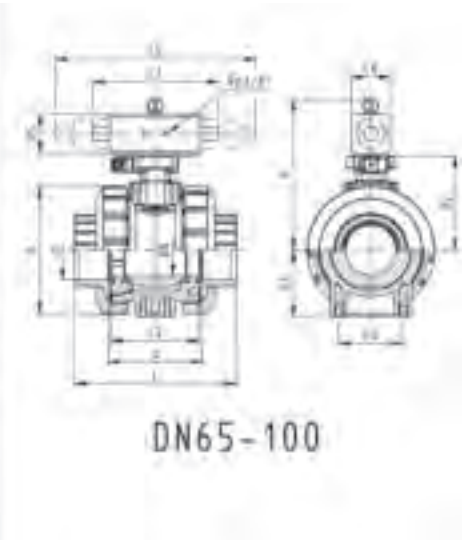



Ball valve type 235 PVC-U FO (Fail safe to open)
Without manual override
With fixed flanges JIS

Model:

- Built on with pneumatic actuator PA11 (DN10/15-25), PA21 (DN32-50)
- Control time 90°<) 1-2s
- For easy installation and removal
- Integrated stainless steel mounting inserts

Option:

- Individual configuration of the valve (see diagram)

Size (inch)	DN (mm)	PN (bar)	kv-value (Δp=1 bar) (l/min)	EPDM Code	Weight (kg)	FPM Code	Weight (kg)
½	15	10	185	**199 235 203**	1.700	**199 235 213**	1.700
¾	20	10	350	**199 235 204**	1.900	**199 235 214**	1.900
1	25	10	700	**199 235 205**	2.100	**199 235 215**	2.100
1 ¼	32	10	1000	**199 235 206**	3.400	**199 235 216**	3.400
1 ½	40	10	1600	**199 235 207**	3.800	**199 235 217**	3.800
2	50	10	3100	**199 235 208**	4.900	**199 235 218**	4.900

Size (inch)	D (mm)	H (mm)	H1 (mm)	H2 (mm)	H4 (mm)	H5 (mm)	H6 (mm)	L (mm)	L1 (mm)	L2 (mm)	L3 (mm)	L4 (mm)	L5 (mm)	L6 (mm)	L7 (mm)
½	50	159	27	62	40	77	48	124	194	56	143	25	261	76	48
¾	58	168	30	71	40	77	53	144	194	65	172	25	261	76	48
1	68	168	36	71	40	77	58	154	194	71	187	25	261	76	48
1 ¼	84	202	44	84	51	99	70	174	224	85	190	45	305	95	59
1 ½	97	202	51	84	51	99	75	194	224	89	212	45	305	95	59
2	124	225	64	106	51	99	83	224	224	101	234	45	305	95	59

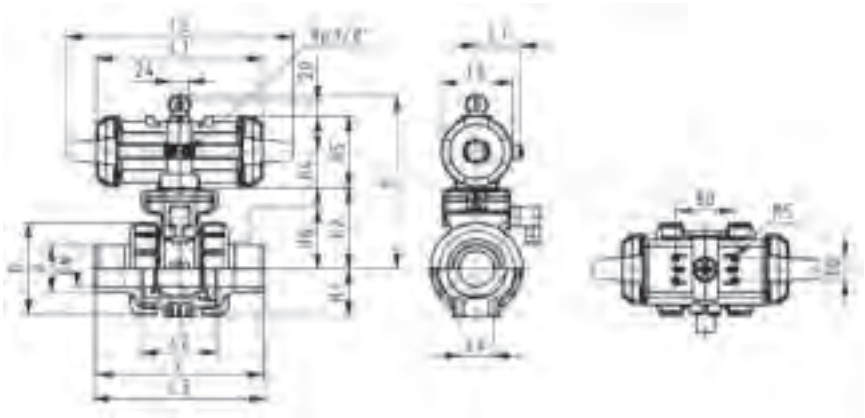



Ball valve type 235 PVC-U FO (Fail safe to open)
Without manual override
With backing flanges PVC-U JIS

Model:

- Control time 90°<) 1-2s
- Assignment of actuators: PA11 (DN10/15-25), PA21 (DN32-50), PA30 (DN65), PA40 (DN80), PA40 (DN100)
- For easy installation and removal
- Integrated stainless steel mounting inserts
- Overall length according to EN 558
- Connecting dimensions: JIS B 2220, 10K

Option:

- Individual configuration of the valve (see diagram)

Size (inch)	DN (mm)	PN (bar)	kv-value (Δp=1 bar) (l/min)	EPDM Code	Weight (kg)	FPM Code	Weight (kg)
2 ½	65	10	5000	**199 235 789**	10.200	**199 235 799**	10.200
3	80	10	7000	**199 235 790**	13.700	**199 235 800**	13.700
4	100	10	11000	**199 235 791**	20.300	**199 235 801**	20.300

Size (inch)	D (mm)	H (mm)	H1 (mm)	H2 (mm)	H5 (mm)	H6 (mm)	L (mm)	L2 (mm)	L3 (mm)	L4 (mm)	L5 (mm)	L6 (mm)
2 ½	166	262	85	156	70	88	284	136	290	70	276	65
3	200	281	105	168	78	93	300	141	310	70	341	72
4	238	292	123	175	86	105	340	164	350	120	369	80

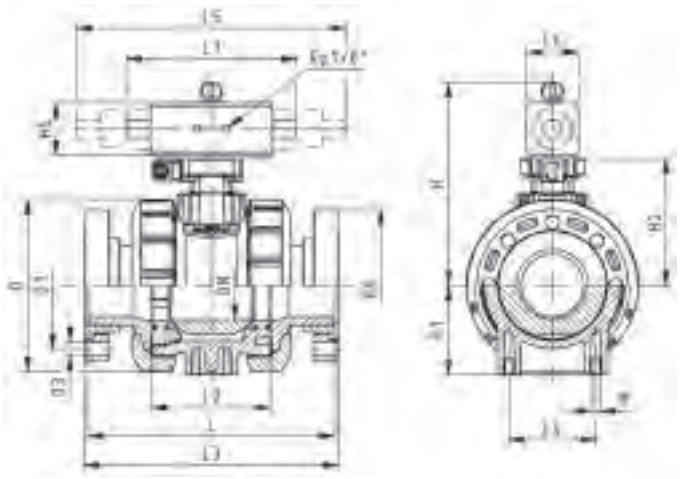



Ball valve type 235 PVC-U DA (Double acting)
Without manual override
With solvent cement sockets JIS

Model:

- Control time 90°<) 1-2s
- Assignment of actuators: PA11 (DN10/15-25), PA21 (DN32-50), PA35 (DN65), PA40 (DN80), PA45 (DN100)
- For easy installation and removal
- Integrated stainless steel mounting inserts

Option:

- Individual configuration of the valve (see diagram)



Size (inch)	DN (mm)	PN (bar)	kv-value (Δp=1 bar) (l/min)	EPDM Code	Weight (kg)	FPM Code	Weight (kg)
½	15	10	185	**199 235 103**	1.200	**199 235 113**	1.200
¾	20	10	350	**199 235 104**	1.300	**199 235 114**	1.300
1	25	10	700	**199 235 105**	1.400	**199 235 115**	1.400
1 ¼	32	10	1000	**199 235 106**	2.500	**199 235 116**	2.500
1 ½	40	10	1600	**199 235 107**	2.800	**199 235 117**	2.800
2	50	10	3100	**199 235 108**	3.700	**199 235 118**	3.700
2 ½	65	10	5000	**199 235 109**	6.600	**199 235 119**	6.600
3	80	10	7000	**199 235 110**	9.600	**199 235 120**	9.600
4	100	10	11000	**199 235 111**	13.600	**199 235 121**	13.600

Size (inch)	D (mm)	H (mm)	H1 (mm)	H2 (mm)	H5 (mm)	L (mm)	L1 (mm)	L2 (mm)	L4 (mm)	L5 (mm)	L6 (mm)	L7 (mm)	z (mm)
½	50	159	27	62	77	95	194	56	25	261	76	48	64
¾	58	168	30	71	77	110	194	65	25	261	76	48	72
1	68	168	36	71	77	123	194	71	25	261	76	48	79
1 ¼	84	202	44	84	99	146	224	85	45	305	95	59	94
1 ½	97	202	51	84	99	157	224	89	45	305	95	59	95
2	124	225	64	106	99	183	224	101	45	305	95	59	107
2 ½	166	257	85	156	66	233	144	136	70		60		144
3	200	274	105	168	70	254	152	141	70		65		151
4	238	273	123	175	78	301	169	164	120		72		174

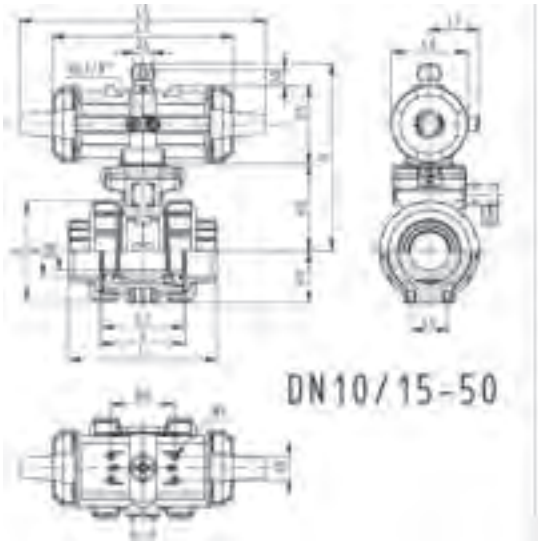

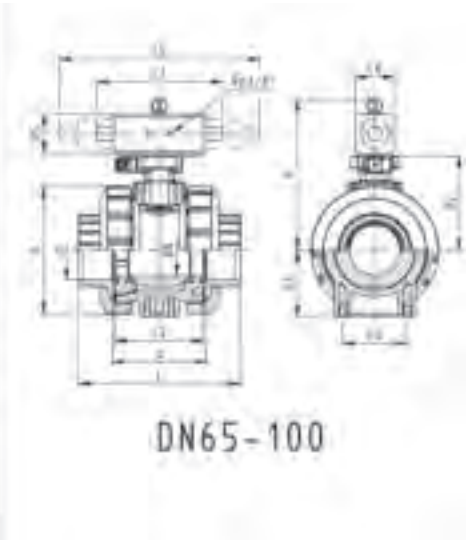



Ball valve type 235 PVC-U DA (Double acting)
Without manual override
With threaded sockets Rc

Model:

- Control time 90°<) 1-2s
- Assignment of actuators: PA11 (DN10/15-25), PA21 (DN32-50), PA35 (DN65), PA40 (DN80), PA45 (DN100)
- For easy installation and removal
- Integrated stainless steel mounting inserts

Option:

- Individual configuration of the valve (see diagram)



Size (inch)	DN (mm)	PN (bar)	kv-value (Δp=1 bar) (l/min)	EPDM Code	Weight (kg)	FPM Code	Weight (kg)
½	15	10	185	**199 235 643**	1.200	**199 235 653**	1.200
¾	20	10	350	**199 235 644**	1.300	**199 235 654**	1.300
1	25	10	700	**199 235 645**	1.400	**199 235 655**	1.400
1 ¼	32	10	1000	**199 235 646**	2.500	**199 235 656**	2.500
1 ½	40	10	1600	**199 235 647**	2.800	**199 235 657**	2.800
2	50	10	3100	**199 235 648**	3.700	**199 235 658**	3.700
2 ½	65	10	5000	**199 235 649**	6.700	**199 235 659**	6.700
3	80	10	7000	**199 235 650**	9.700	**199 235 660**	9.700
4	100	10	11000	**199 235 651**	13.800	**199 235 661**	13.800

Size (inch)	D (mm)	H (mm)	H1 (mm)	H2 (mm)	H5 (mm)	L (mm)	L1 (mm)	L2 (mm)	L4 (mm)	L5 (mm)	L6 (mm)	L7 (mm)	z (mm)
½	50	159	27	62	77	95	194	56	25	261	76	48	65
¾	58	168	30	71	77	110	194	65	25	261	76	48	72
1	68	168	36	71	77	123	194	71	25	261	76	48	79
1 ¼	84	202	44	84	99	146	224	85	45	305	95	59	94
1 ½	97	202	51	84	99	157	224	89	45	305	95	59	95
2	124	225	64	106	99	183	224	101	45	305	95	59	107
2 ½	166	257	85	156	66	233	144	136	70		60		144
3	200	274	105	168	70	254	152	141	70		65		151
4	238	273	123	175	78	301	169	164	120		72		174

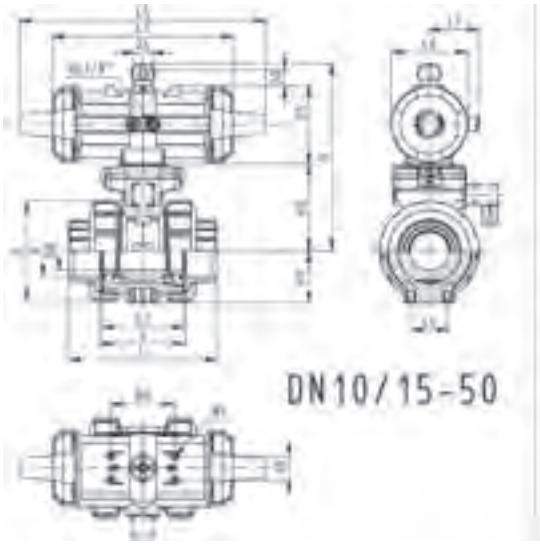

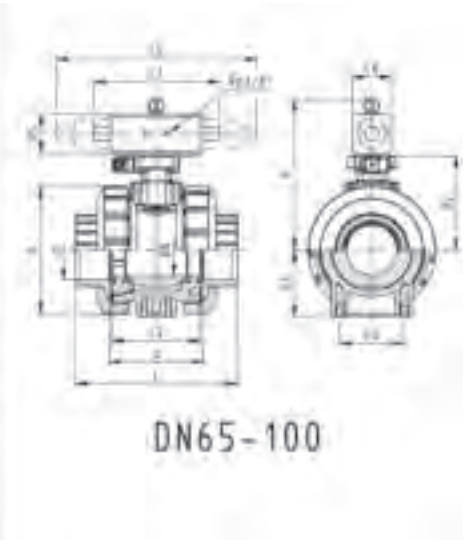



Ball valve type 235 PVC-U DA (Double acting)
Without manual override
With fixed flanges JIS

Model:

- Built on with pneumatic actuator PA11 (DN10/15-25), PA21 (DN32-50)
- Control time 90°<) 1-2s
- For easy installation and removal
- Integrated stainless steel mounting inserts

Option:

- Individual configuration of the valve (see diagram)

Size (inch)	DN (mm)	PN (bar)	kv-value (Δp=1 bar) (l/min)	EPDM Code	Weight (kg)	FPM Code	Weight (kg)
½	15	10	185	**199 235 223**	1.700	**199 235 233**	1.700
¾	20	10	350	**199 235 224**	1.900	**199 235 234**	1.900
1	25	10	700	**199 235 225**	2.100	**199 235 235**	2.100
1 ¼	32	10	1000	**199 235 226**	3.400	**199 235 236**	3.400
1 ½	40	10	1600	**199 235 227**	3.800	**199 235 237**	3.800
2	50	10	3100	**199 235 228**	4.900	**199 235 238**	4.900

Size (inch)	D (mm)	H (mm)	H1 (mm)	H2 (mm)	H4 (mm)	H5 (mm)	H6 (mm)	L (mm)	L1 (mm)	L2 (mm)	L3 (mm)	L4 (mm)	L5 (mm)	L6 (mm)	L7 (mm)
½	50	159	27	62	40	77	48	124	194	56	143	25	261	76	48
¾	58	168	30	71	40	77	53	144	194	65	172	25	261	76	48
1	68	168	36	71	40	77	58	154	194	71	187	25	261	76	48
1 ¼	84	202	44	84	51	99	70	174	224	85	190	45	305	95	59
1 ½	97	202	51	84	51	99	75	194	224	89	212	45	305	95	59
2	124	225	64	106	51	99	83	224	224	101	234	45	305	95	59

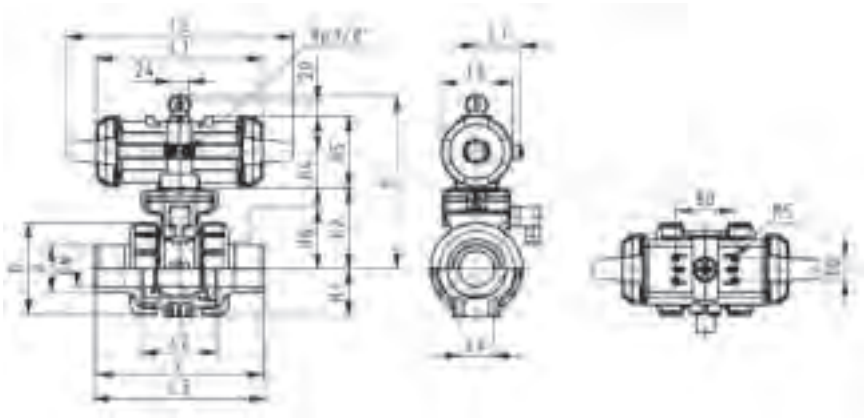



Ball valve type 235 PVC-U DA (Double acting)
Without manual override
With backing flanges PVC-U JIS

Model:

- Control time 90°<) 1-2s
- Assignment of actuators: PA11 (DN10/15-25), PA21 (DN32-50), PA35 (DN65), PA40 (DN80), PA45 (DN100)
- For easy installation and removal
- Integrated stainless steel mounting inserts
- Overall length according to EN 558
- Connecting dimensions: JIS B 2220, 10K

Option:

- Individual configuration of the valve (see diagram)

Size (inch)	DN (mm)	PN (bar)	kv-value (Δp=1 bar) (l/min)	EPDM Code	Weight (kg)	FPM Code	Weight (kg)
2 ½	65	10	5000	**199 235 809**	9.000	**199 235 819**	9.000
3	80	10	7000	**199 235 810**	13.000	**199 235 820**	13.000
4	100	10	11000	**199 235 811**	18.600	**199 235 821**	18.600

Size (inch)	D (mm)	H (mm)	H1 (mm)	H2 (mm)	H5 (mm)	H6 (mm)	L (mm)	L1 (mm)	L2 (mm)	L3 (mm)	L4 (mm)	L6 (mm)
2 ½	166	257	85	156	66	88	284	144	136	290	70	60
3	200	274	105	168	70	93	300	152	141	310	70	65
4	238	273	123	175	78	105	340	169	164	350	120	72

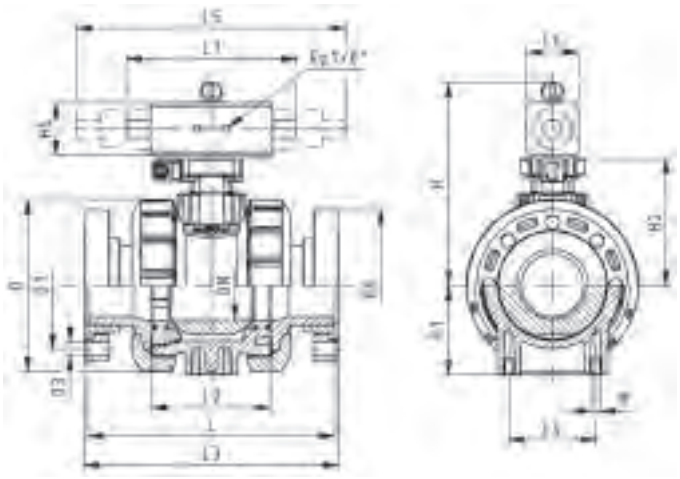

3-Way ball valves type 543



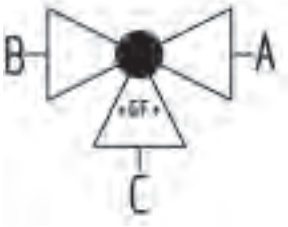



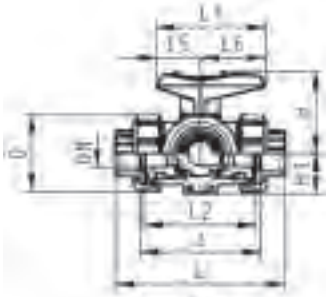

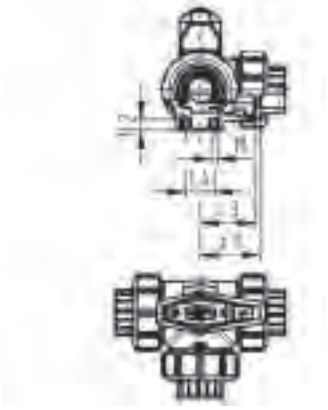

3-Way ball valve type 543 PVC-U
Horizontal/L-port
With solvent cement sockets BS

Model:

- For easy installation and removal (valve end and union nut are compatible with type 546)
- Ball seals PTFE
- Pneumatic or electric actuator available separately
- Angle of operation 360° without turn limiter
- Turn limiter 90° enclosed, in different positions usable as a clip-on ring
- Integrated stainless steel mounting inserts
- Delivery status A-C opened, see flow scheme

Size (inch)	DN (mm)	PN (bar)	kv-value (Δp=1 bar) (l/min)	EPDM Code	Weight (kg)	FPM Code	Weight (kg)
⅜	10	10	50	**161 543 061**	0.245	**161 543 071**	0.245
½	15	10	75	**161 543 062**	0.251	**161 543 072**	0.251
¾	20	10	150	**161 543 063**	0.361	**161 543 073**	0.361
1	25	10	280	**161 543 064**	0.551	**161 543 074**	0.551
1 ¼	32	10	480	**161 543 065**	0.938	**161 543 075**	0.938
1 ½	40	10	620	**161 543 066**	1.388	**161 543 076**	1.390
2	50	10	1230	**161 543 067**	2.728	**161 543 077**	2.705

Size (inch)	D (mm)	H (mm)	H1 (mm)	H2 (mm)	L (mm)	L1 (mm)	L2 (mm)	L3 (mm)	L4 (mm)	L5 (mm)	L6 (mm)	M	z (mm)	z1 (mm)
⅜	50	57	28	8	109	77	73	36	25	32	45	6	77	38
½	50	57	28	8	112	77	73	36	25	32	45	6	77	38
¾	58	67	32	8	131	97	86	43	25	39	58	6	90	45
1	68	73	36	8	151	97	99	50	25	39	58	6	103	52
1 ¼	84	90	45	9	181	128	120	60	45	54	74	8	124	62
1 ½	97	97	51	9	205	128	137	69	45	54	74	8	145	73
2	124	116	65	9	261	152	179	89	45	66	87	8	189	94



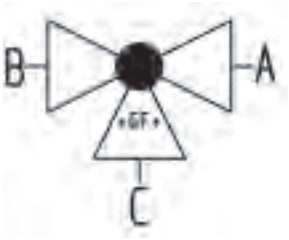



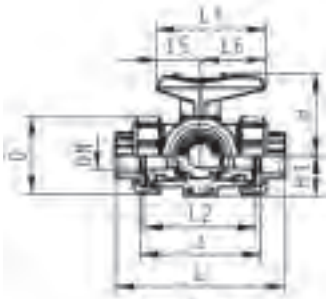

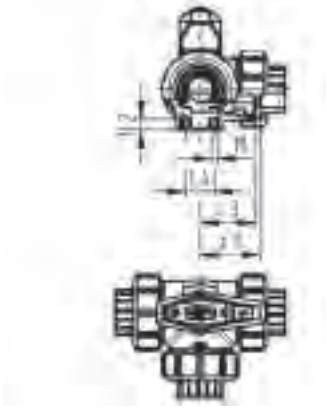

3-Way ball valve type 543 PVC-U
Horizontal/L-port
With solvent cement sockets JIS

Model:

- For easy installation and removal (valve end and union nut are compatible with type 546)
- Ball seals PTFE
- Pneumatic or electric actuator available separately
- Angle of operation 360° without turn limiter
- Turn limiter 90° enclosed, in different positions usable as a clip-on ring
- Integrated stainless steel mounting inserts
- Delivery status A-C opened, see flow scheme

Size (inch)	DN (mm)	PN (bar)	kv-value (Δp=1 bar) (l/min)	EPDM Code	Weight (kg)	FPM Code	Weight (kg)
½	15	10	75	**161 543 122**	0.226	**161 543 132**	0.251
¾	20	10	150	**161 543 123**	0.361	**161 543 133**	0.361
1	25	10	280	**161 543 124**	0.551	**161 543 134**	0.551
1 ¼	32	10	480	**161 543 125**	0.938	**161 543 135**	0.938
1 ½	40	10	620	**161 543 126**	1.390	**161 543 136**	1.390
2	50	10	1230	**161 543 127**	2.723	**161 543 137**	2.705

Size (inch)	D (mm)	H (mm)	H1 (mm)	H2 (mm)	L (mm)	L1 (mm)	L2 (mm)	L3 (mm)	L4 (mm)	L5 (mm)	L6 (mm)	M	z (mm)	z1 (mm)
½	50	57	28	8	112	77	73	36	25	32	45	6	81	40
¾	58	67	32	8	131	97	86	43	25	39	58	6	94	47
1	68	73	36	8	151	97	99	50	25	39	58	6	107	54
1 ¼	84	90	45	9	181	128	120	60	45	54	74	8	130	65
1 ½	97	97	51	9	205	128	137	69	45	54	74	8	143	72
2	124	116	65	9	261	152	179	89	45	66	87	8	185	92



3-Way ball valve type 543 PVC-U
Horizontal/T-port
With solvent cement sockets BS

Model:

- For easy installation and removal (valve end and union nut are compatible with type 546)
- Ball seals PTFE
- Pneumatic or electric actuator available separately
- Angle of operation 360° without turn limiter
- Turn limiter 90° enclosed, in different positions usable as a clip-on ring
- Integrated stainless steel mounting inserts
- Delivery status A-B-C opened, see flow scheme

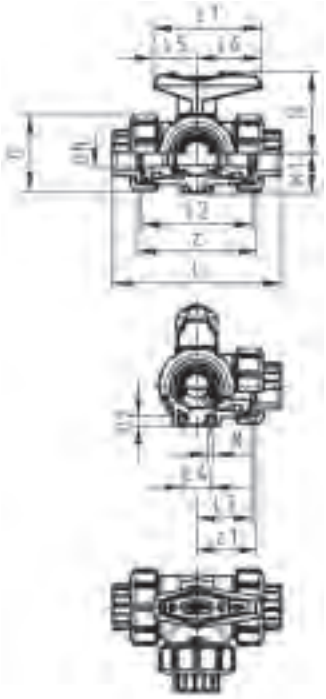

Size (inch)	DN (mm)	PN (bar)	kv-value (Δp=1 bar) (l/min)	EPDM Code	Weight (kg)	FPM Code	Weight (kg)
⅜	10	10	140	**161 543 261**	0.244	**161 543 271**	0.244
½	15	10	200	**161 543 262**	0.250	**161 543 272**	0.250
¾	20	10	470	**161 543 263**	0.359	**161 543 273**	0.359
1	25	10	793	**161 543 264**	0.544	**161 543 274**	0.544
1 ¼	32	10	1290	**161 543 265**	0.927	**161 543 275**	0.927
1 ½	40	10	1910	**161 543 266**	1.370	**161 543 276**	1.391
2	50	10	3100	**161 543 267**	2.689	**161 543 277**	2.660

Size (inch)	D (mm)	H (mm)	H1 (mm)	H2 (mm)	L (mm)	L1 (mm)	L2 (mm)	L3 (mm)	L4 (mm)	L5 (mm)	L6 (mm)	M	z (mm)	z1 (mm)
⅜	50	57	28	8	109	77	73	36	25	32	45	6	77	38
½	50	57	28	8	112	77	73	36	25	32	45	6	77	38
¾	58	67	32	8	131	97	86	43	25	39	58	6	90	45
1	68	73	36	8	151	97	99	50	25	39	58	6	103	52
1 ¼	84	90	45	9	181	128	120	60	45	54	74	8	124	62
1 ½	97	97	51	9	205	128	137	69	45	54	74	8	145	73
2	124	116	65	9	261	152	179	89	45	66	87	8	189	94

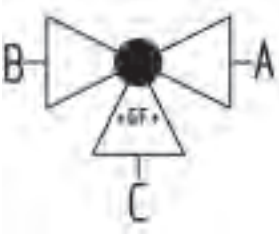





3-Way ball valve type 543 PVC-U
Horizontal/T-port
With solvent cement sockets JIS

Model:

- For easy installation and removal (valve end and union nut are compatible with type 546)
- Ball seals PTFE
- Pneumatic or electric actuator available separately
- Angle of operation 360° without turn limiter
- Turn limiter 90° enclosed, in different positions usable as a clip-on ring
- Integrated stainless steel mounting inserts
- Delivery status A-B-C opened, see flow scheme

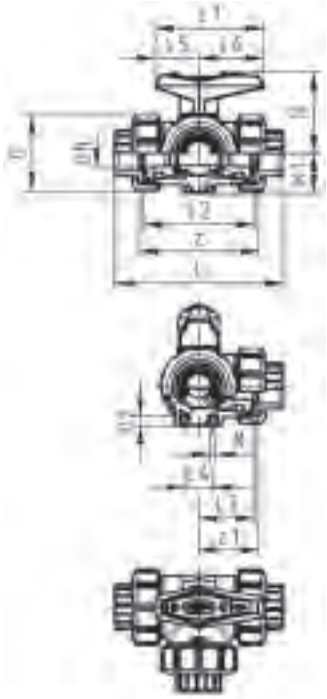

Size (inch)	DN (mm)	PN (bar)	kv-value (Δp=1 bar) (l/min)	EPDM Code	Weight (kg)	FPM Code	Weight (kg)
½	15	10	200	**161 543 322**	0.250	**161 543 332**	0.250
¾	20	10	470	**161 543 323**	0.336	**161 543 333**	0.359
1	25	10	793	**161 543 324**	0.544	**161 543 334**	0.544
1 ¼	32	10	1290	**161 543 325**	0.927	**161 543 335**	0.927
1 ½	40	10	1910	**161 543 326**	1.369	**161 543 336**	1.394
2	50	10	3100	**161 543 327**	2.682	**161 543 337**	2.660

Size (inch)	D (mm)	H (mm)	H1 (mm)	H2 (mm)	L (mm)	L1 (mm)	L2 (mm)	L3 (mm)	L4 (mm)	L5 (mm)	L6 (mm)	M	z (mm)	z1 (mm)
½	50	57	28	8	112	77	73	36	25	32	45	6	81	40
¾	58	67	32	8	131	97	86	43	25	39	58	6	94	47
1	68	73	36	8	151	97	99	50	25	39	58	6	107	54
1 ¼	84	90	45	9	181	128	120	60	45	54	74	8	130	65
1 ½	97	97	51	9	205	128	137	69	45	54	74	8	143	72
2	124	116	65	9	261	152	179	89	45	66	87	8	185	92

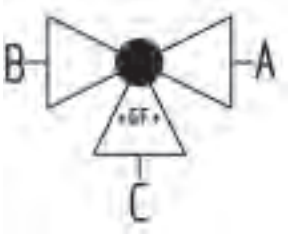





3-Way ball valve type 543 PVC-U
Vertical/L-port
With solvent cement sockets BS

Model:

- Vertical inlet solvent cement spigot metric
- Easy installation and removal using union on third outlet
- Ball seals PTFE
- Electric actuator available separately
- Angle of operation 360° without turn limiter
- Delivery status B-C opened, see flow scheme

Mode of action:

- For interconnection of two inputs

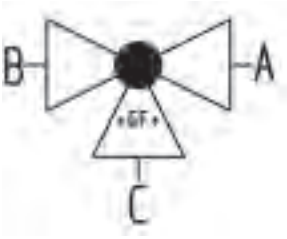

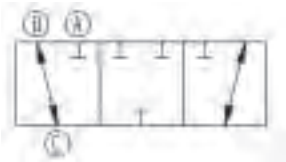

Size (inch)	DN (mm)	PN (bar)	kv-value (Δp=1 bar) (l/min)	EPDM Code	Weight (kg)	FPM Code	Weight (kg)
⅜	10	10	49	**161 543 601**	0.162	**161 543 611**	0.162
½	15	10	77	**161 543 602**	0.166	**161 543 612**	0.166
¾	20	10	146	**161 543 603**	0.255	**161 543 613**	0.255
1	25	10	260	**161 543 604**	0.372	**161 543 614**	0.372
1 ¼	32	10	437	**161 543 605**	0.622	**161 543 615**	0.622
1 ½	40	10	667	**161 543 606**	0.886	**161 543 616**	0.886
2	50	10	1293	**161 543 607**	1.617	**161 543 617**	1.617

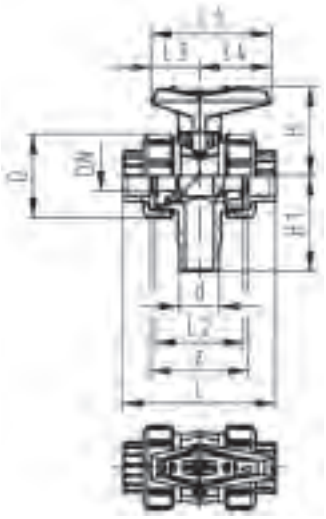

Size (inch)	D (mm)	H (mm)	H1 (mm)	L (mm)	L1 (mm)	L2 (mm)	L3 (mm)	L4 (mm)	z (mm)
⅜	50	57	62	92	77	56	32	45	60
½	50	57	62	95	77	56	32	45	60
¾	58	67	72	111	97	66	39	58	69
1	68	73	77	123	97	71	39	58	75
1 ¼	84	90	87	146	128	85	54	74	89
1 ½	97	97	97	157	128	89	54	74	97
2	124	116	112	183	152	101	66	87	110



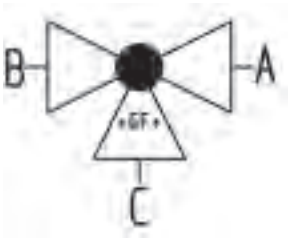

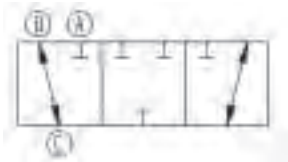

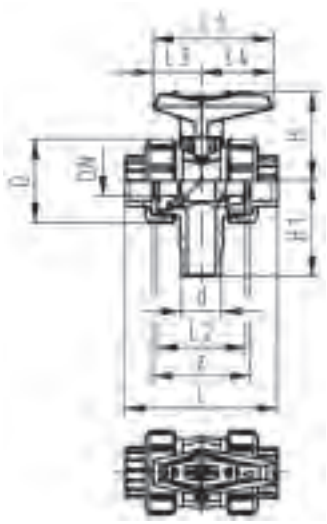

3-Way ball valve type 543 PVC-U
Vertical/L-port
With solvent cement sockets JIS

Model:

- Vertical inlet solvent cement spigot metric
- Easy installation and removal using union on third outlet
- Ball seals PTFE
- Electric actuator available separately
- Angle of operation 360° without turn limiter
- Delivery status B-C opened, see flow scheme

Mode of action:

- For interconnection of two inputs

Size (inch)	DN (mm)	PN (bar)	kv-value (Δp=1 bar) (l/min)	EPDM Code	Weight (kg)	FPM Code	Weight (kg)
½	15	10	77	**161 543 942**	0.166	**161 543 952**	0.159
¾	20	10	146	**161 543 943**	0.255	**161 543 953**	0.255
1	25	10	260	**161 543 944**	0.372	**161 543 954**	0.372
1 ¼	32	10	437	**161 543 945**	0.622	**161 543 955**	0.622
1 ½	40	10	667	**161 543 946**	0.886	**161 543 956**	0.886
2	50	10	1293	**161 543 947**	1.617	**161 543 957**	1.617

Size (inch)	D (mm)	H (mm)	H1 (mm)	L (mm)	L1 (mm)	L2 (mm)	L3 (mm)	L4 (mm)	z (mm)
½	50	57	62	95	77	56	32	45	64
¾	58	67	72	111	97	66	39	58	74
1	68	73	77	123	97	71	39	58	79
1 ¼	84	90	87	146	128	85	54	74	95
1 ½	97	97	97	157	128	89	54	74	95
2	124	116	112	183	152	101	66	87	107



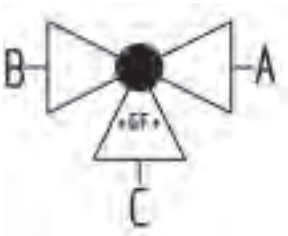



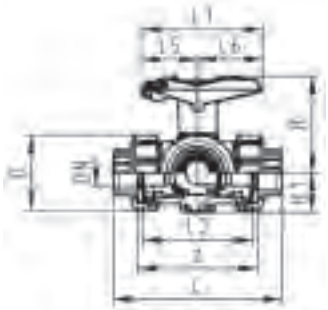

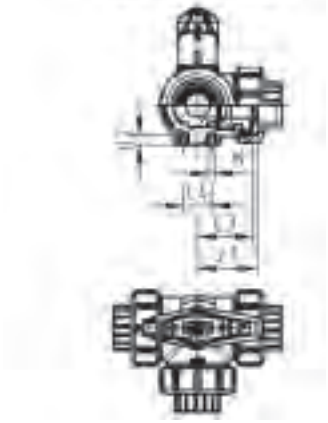

3-Way ball valve type 543 PVC-U
Horizontal/L-port
With lockable handle
With solvent cement sockets BS

Model:

- For easy installation and removal (valve end and union nut are compatible with type 546)
- Ball seals PTFE
- Pneumatic or electric actuator available separately
- Angle of operation 360° without turn limiter
- Integrated stainless steel mounting inserts
- Multifunctional lever red with ratched setting 45°, lockable
- Delivery status A-C opened, see flow scheme

Size (inch)	DN (mm)	PN (bar)	kv-value (Δp=1 bar) (l/min)	EPDM Code	Weight (kg)	FPM Code	Weight (kg)
⅜	10	10	50	**161 543 861**	0.259	**161 543 871**	0.259
½	15	10	75	**161 543 862**	0.265	**161 543 872**	0.265
¾	20	10	150	**161 543 863**	0.378	**161 543 873**	0.378
1	25	10	280	**161 543 864**	0.568	**161 543 874**	0.568
1 ¼	32	10	480	**161 543 865**	0.961	**161 543 875**	0.961
1 ½	40	10	620	**161 543 866**	1.413	**161 543 876**	1.413
2	50	10	1230	**161 543 867**	2.736	**161 543 877**	2.736

Size (inch)	D (mm)	H (mm)	H1 (mm)	H2 (mm)	L (mm)	L1 (mm)	L2 (mm)	L3 (mm)	L4 (mm)	L5 (mm)	L6 (mm)	M	z (mm)	z1 (mm)
⅜	50	79	28	8	109	87	73	36	25	42	45	6	77	38
½	50	79	28	8	112	87	73	36	25	42	45	6	77	38
¾	58	88	32	8	131	108	86	43	25	50	58	6	90	45
1	68	94	36	8	151	108	99	50	25	50	58	6	103	52
1 ¼	84	113	45	9	181	141	120	60	45	66	75	8	124	62
1 ½	97	119	51	9	205	141	137	69	45	66	75	8	145	73
2	124	141	65	9	261	165	179	89	45	78	87	8	189	94



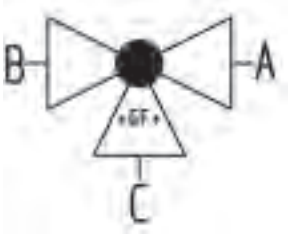



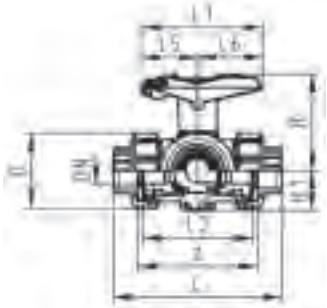

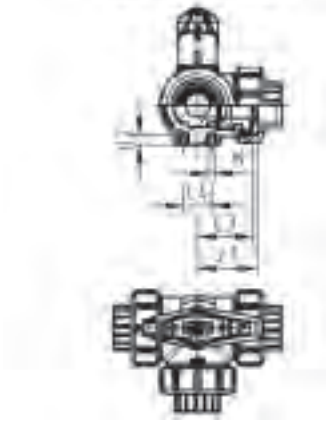

3-Way ball valve type 543 PVC-U
Horizontal/L-port
With lockable handle
With solvent cement sockets JIS

Model:

- For easy installation and removal (valve end and union nut are compatible with type 546)
- Ball seals PTFE
- Pneumatic or electric actuator available separately
- Angle of operation 360° without turn limiter
- Integrated stainless steel mounting inserts
- Multifunctional lever red with ratched setting 45°, lockable
- Delivery status A-C opened, see flow scheme

Size (inch)	DN (mm)	PN (bar)	kv-value (Δp=1 bar) (l/min)	EPDM Code	Weight (kg)	FPM Code	Weight (kg)
½	15	10	75	**161 543 522**	0.265	**161 543 532**	0.265
¾	20	10	150	**161 543 523**	0.378	**161 543 533**	0.378
1	25	10	280	**161 543 524**	0.568	**161 543 534**	0.568
1 ¼	32	10	480	**161 543 525**	0.961	**161 543 535**	0.961
1 ½	40	10	620	**161 543 526**	1.413	**161 543 536**	1.413
2	50	10	1230	**161 543 527**	2.736	**161 543 537**	2.736

Size (inch)	D (mm)	H (mm)	H1 (mm)	H2 (mm)	L (mm)	L1 (mm)	L2 (mm)	L3 (mm)	L4 (mm)	L5 (mm)	L6 (mm)	M	z (mm)	z1 (mm)
½	50	79	28	8	112	87	73	36	25	42	45	6	81	40
¾	58	88	32	8	131	108	86	43	25	50	58	6	94	47
1	68	94	36	8	151	108	99	50	25	50	58	6	107	54
1 ¼	84	113	45	9	181	141	120	60	45	66	75	8	130	65
1 ½	97	119	51	9	205	141	137	69	45	66	75	8	143	72
2	124	141	65	9	261	165	179	89	45	78	87	8	185	92



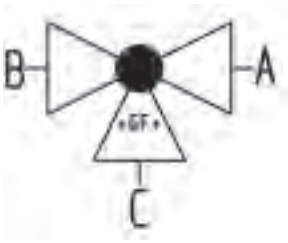

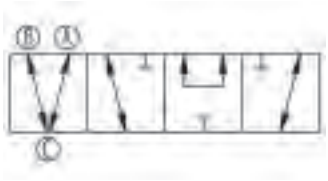

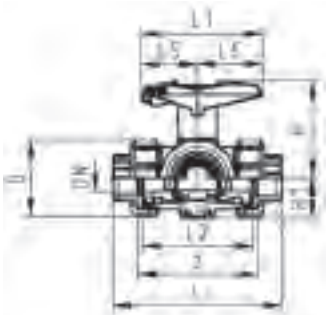

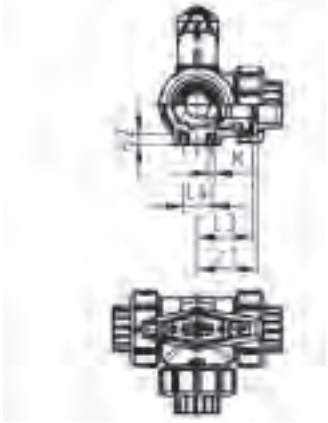

3-Way ball valve type 543 PVC-U
Horizontal/T-port
With lockable handle
With solvent cement sockets BS

Model:

- For easy installation and removal (valve end and union nut are compatible with type 546)
- Ball seals PTFE
- Pneumatic or electric actuator available separately
- Angle of operation 360° without turn limiter
- Turn limiter 90° enclosed, in different positions usable as a clip-on ring
- Integrated stainless steel mounting inserts
- Multifunctional lever red with ratched setting 45°, lockable
- Delivery status A-B-C opened, see flow scheme

Size (inch)	DN (mm)	PN (bar)	kv-value (Δp=1 bar) (l/min)	EPDM Code	Weight (kg)	FPM Code	Weight (kg)
⅜	10	10	140	**161 543 881**	0.258	**161 543 891**	0.258
½	15	10	200	**161 543 882**	0.264	**161 543 892**	0.264
¾	20	10	470	**161 543 883**	0.376	**161 543 893**	0.376
1	25	10	793	**161 543 884**	0.561	**161 543 894**	0.561
1 ¼	32	10	1290	**161 543 885**	0.950	**161 543 895**	0.950
1 ½	40	10	1910	**161 543 886**	1.392	**161 543 896**	1.392
2	50	10	3100	**161 543 887**	2.691	**161 543 897**	2.691

Size (inch)	D (mm)	H (mm)	H1 (mm)	H2 (mm)	L (mm)	L1 (mm)	L2 (mm)	L3 (mm)	L4 (mm)	L5 (mm)	L6 (mm)	M	z (mm)	z1 (mm)
⅜	50	79	28	8	109	87	73	36	25	42	45	6	77	38
½	50	79	28	8	112	87	73	36	25	42	45	6	77	38
¾	58	88	32	8	131	108	86	43	25	50	58	6	90	45
1	68	94	36	8	151	108	99	50	25	50	58	6	103	52
1 ¼	84	113	45	9	181	141	120	60	45	66	75	8	124	62
1 ½	97	119	51	9	205	141	137	69	45	66	75	8	145	73
2	124	141	65	9	261	165	179	89	45	78	87	8	189	94



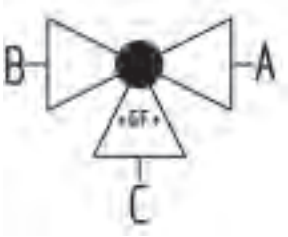

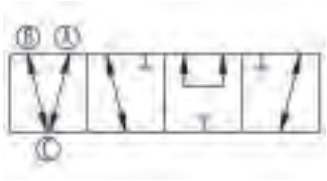

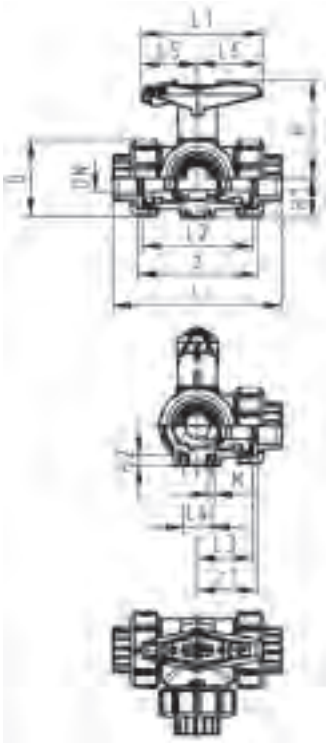

3-Way ball valve type 543 PVC-U
Horizontal/T-port
With lockable handle
With solvent cement sockets JIS

Model:

- For easy installation and removal (valve end and union nut are compatible with type 546)
- Ball seals PTFE
- Pneumatic or electric actuator available separately
- Angle of operation 360° without turn limiter
- Turn limiter 90° enclosed, in different positions usable as a clip-on ring
- Integrated stainless steel mounting inserts
- Multifunctional lever red with ratched setting 45°, lockable
- Delivery status A-B-C opened, see flow scheme

Size (inch)	DN (mm)	PN (bar)	kv-value (Δp=1 bar) (l/min)	EPDM Code	Weight (kg)	FPM Code	Weight (kg)
½	15	10	200	**161 543 542**	0.264	**161 543 552**	0.264
¾	20	10	470	**161 543 543**	0.376	**161 543 553**	0.376
1	25	10	793	**161 543 544**	0.561	**161 543 554**	0.561
1 ¼	32	10	1290	**161 543 545**	0.950	**161 543 555**	0.950
1 ½	40	10	1910	**161 543 546**	1.392	**161 543 556**	1.392
2	50	10	3100	**161 543 547**	2.691	**161 543 557**	2.691

Size (inch)	D (mm)	H (mm)	H1 (mm)	H2 (mm)	L (mm)	L1 (mm)	L2 (mm)	L3 (mm)	L4 (mm)	L5 (mm)	L6 (mm)	M	z (mm)	z1 (mm)
½	50	79	28	8	112	87	73	36	25	42	45	6	81	40
¾	58	88	32	8	131	108	86	43	25	50	58	6	94	47
1	68	94	36	8	151	108	99	50	25	50	58	6	107	54
1 ¼	84	113	45	9	181	141	120	60	45	66	75	8	130	65
1 ½	97	119	51	9	205	141	137	69	45	66	75	8	143	72
2	124	141	65	9	261	165	179	89	45	78	87	8	185	92

3-Way ball valves electric type 167



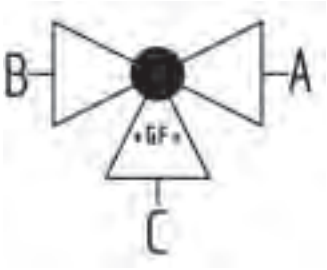



3-Way ball valve type 167 PVC-U
Horizontal/L-port 100-230V
With manual emergency override
With solvent cement sockets JIS

Model:

- Voltage 100-230 V, 50-60 Hz
- Factory set control range 90°<)
- Basic position A-C opened, activated position B-C opened, see flow scheme
- Other positions possible by adjusting the limit switches
- Heating element, position feedback (Open/Close/ Middle)
- Integrated stainless steel mounting inserts

Option:

- Optional accessories: Fail-safe return unit, Monitoring board, Position controller, Profibus DP board

Size (inch)	DN (mm)	PN (bar)	kv-value (Δp=1 bar) (l/min)	EA	EPDM Code	Weight (kg)
½	15	10	75	EA25	**199 167 843**	2.122
¾	20	10	150	EA25	**199 167 844**	2.128
1	25	10	280	EA25	**199 167 845**	2.256
1 ¼	32	10	480	EA25	**199 167 846**	2.446
1 ½	40	10	620	EA25	**199 167 847**	2.870
2	50	10	1230	EA25	**199 167 848**	3.322

Size (inch)	D (mm)	H (mm)	H1 (mm)	H2 (mm)	H3 (mm)	H5 (mm)	H6 (mm)	L (mm)	L1 (mm)	L2 (mm)	L3 (mm)	L4 (mm)	L5 (mm)	L6 (mm)	L7 (mm)
½	50	231	28	64	94	167	8	112	180	73	36	25	97	83	122
¾	58	240	32	73	94	167	8	131	180	86	43	25	97	83	122
1	68	240	36	73	94	167	8	151	180	99	50	25	97	83	122
1 ¼	84	251	45	84	94	167	9	181	180	120	60	45	97	83	122
1 ½	97	251	51	84	94	167	9	205	180	137	69	45	97	83	122
2	124	273	65	106	94	167	9	261	180	179	89	45	97	83	122

Size (inch)	L8 (mm)	M	z (mm)	z1 (mm)
½	33	6	81	40
¾	33	6	94	47
1	33	6	107	54
1 ¼	33	8	130	65
1 ½	33	8	143	72
2	33	8	185	92

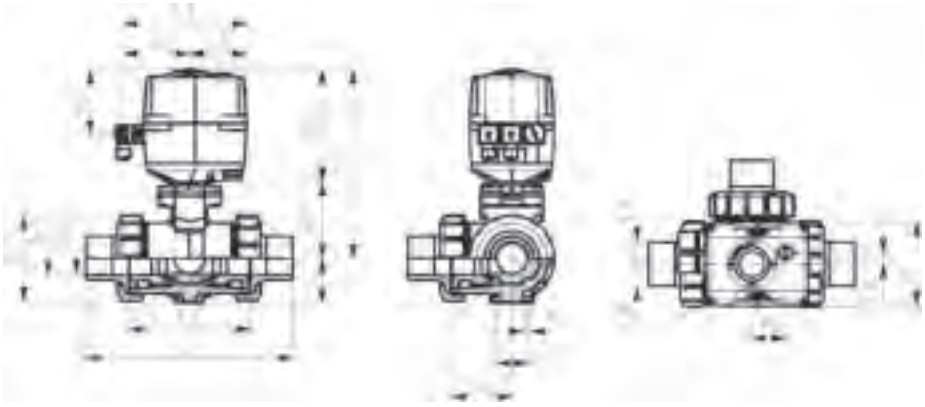

3-Way ball valves electric type 170



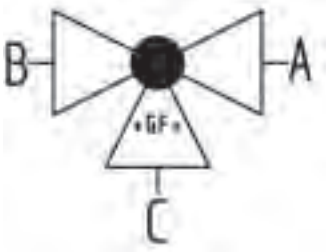

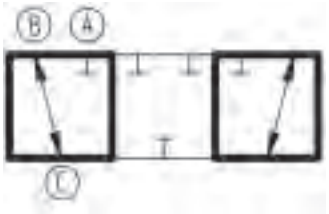

3-Way ball valve type 170 PVC-U
Vertical/L-port 100-230V
With manual emergency override
With solvent cement sockets JIS

Model:

- Voltage 100-230 V, 50-60 Hz
- Factory set control range 90°<)
- Basic position B-C opened, activated position A-C opened, see flow scheme
- Other positions possible by adjusting the limit switches
- Heating element, position feedback (Open/Close/ Middle)
- Integrated stainless steel mounting inserts

Option:

- Optional accessories: Fail-safe return unit, Monitoring board, Position controller, Profibus DP board

Size (inch)	DN (mm)	PN (bar)	kv-value (Δp=1 bar) (l/min)	EA	EPDM Code	Weight (kg)	FPM Code	Weight (kg)
½	15	10	77	EA25	**199 170 333**	2.043	**199 170 343**	2.001
¾	20	10	146	EA25	**199 170 334**	2.150	**199 170 344**	2.004
1	25	10	260	EA25	**199 170 335**	2.267	**199 170 345**	2.090
1 ¼	32	10	437	EA25	**199 170 336**	2.554	**199 170 346**	2.179
1 ½	40	10	667	EA25	**199 170 337**	2.818	**199 170 347**	2.407
2	50	10	1293	EA25	**199 170 338**	3.595	**199 170 348**	2.609

Size (inch)	D (mm)	H (mm)	H1 (mm)	H2 (mm)	H3 (mm)	H5 (mm)	L (mm)	L1 (mm)	L2 (mm)	L5 (mm)	L6 (mm)	L7 (mm)	L8 (mm)	z (mm)
½	50	231	62	64	94	167	95	180	56	97	83	122	33	64
¾	58	240	72	73	94	167	111	180	66	97	83	122	33	74
1	68	240	77	73	94	167	123	180	71	97	83	122	33	79
1 ¼	84	251	87	84	94	167	146	180	85	97	83	122	33	95
1 ½	97	251	97	84	94	167	157	180	89	97	83	122	33	95
2	124	273	112	106	94	167	183	180	101	97	83	122	33	107

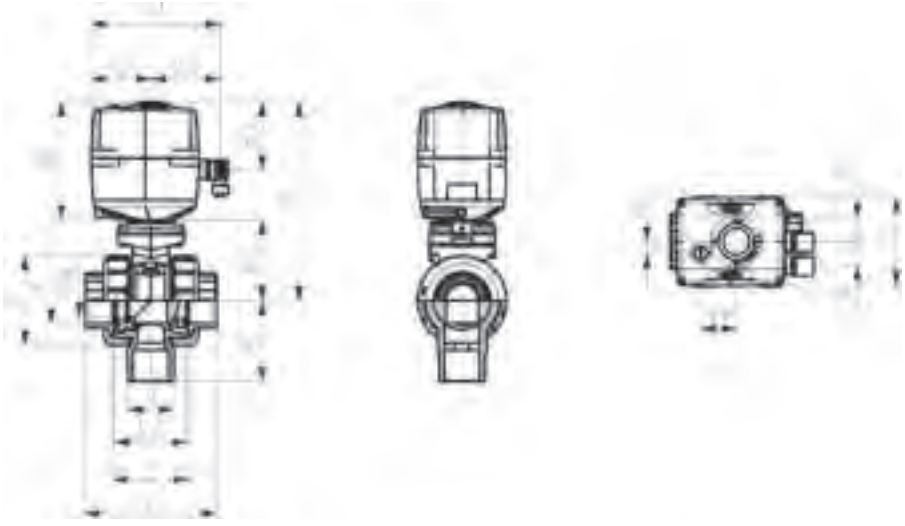



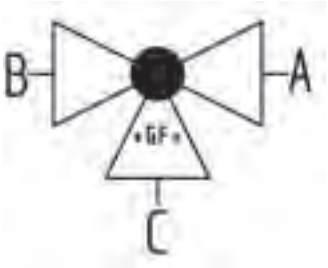

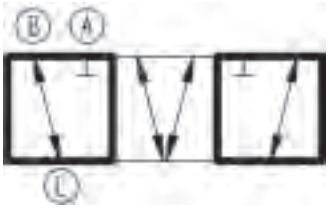

3-Way ball valve type 170 PVC-U
Vertical diverter ball 100-230V
With manual emergency override
With solvent cement sockets JIS

Model:

- Voltage 100-230 V, 50-60 Hz
- Factory set control range 90°<)
- Basic position B-C opened, activated position A-C opened, see flow scheme
- Other positions possible by adjusting the limit switches
- Heating element, position feedback (Open/Close/ Middle)
- Integrated stainless steel mounting inserts

Option:

- Optional accessories: Fail-safe return unit, Monitoring board, Position controller, Profibus DP board

Size (inch)	DN (mm)	PN (bar)	kv-value (Δp=1 bar) (l/min)	EA	EPDM Code	Weight (kg)	FPM Code	Weight (kg)
½	15	10	77	EA25	**199 170 373**	3.595	**199 170 383**	3.550
¾	20	10	146	EA25	**199 170 374**	2.042	**199 170 384**	2.042
1	25	10	260	EA25	**199 170 375**	2.148	**199 170 385**	2.148
1 ¼	32	10	437	EA25	**199 170 376**	2.260	**199 170 386**	2.260
1 ½	40	10	667	EA25	**199 170 377**	2.543	**199 170 387**	2.543
2	50	10	1293	EA25	**199 170 378**	2.797	**199 170 388**	2.797

Size (inch)	D (mm)	H (mm)	H1 (mm)	H2 (mm)	H3 (mm)	H5 (mm)	L (mm)	L1 (mm)	L2 (mm)	L5 (mm)	L6 (mm)	L7 (mm)	L8 (mm)	z (mm)
½	50	231	62	64	94	167	95	180	56	97	83	122	33	64
¾	58	240	72	73	94	167	111	180	66	97	83	122	33	74
1	68	240	77	73	94	167	123	180	71	97	83	122	33	79
1 ¼	84	251	87	84	94	167	146	180	85	97	83	122	33	95
1 ½	97	251	97	84	94	167	157	180	89	97	83	122	33	95
2	124	273	112	106	94	167	183	180	101	97	83	122	33	107

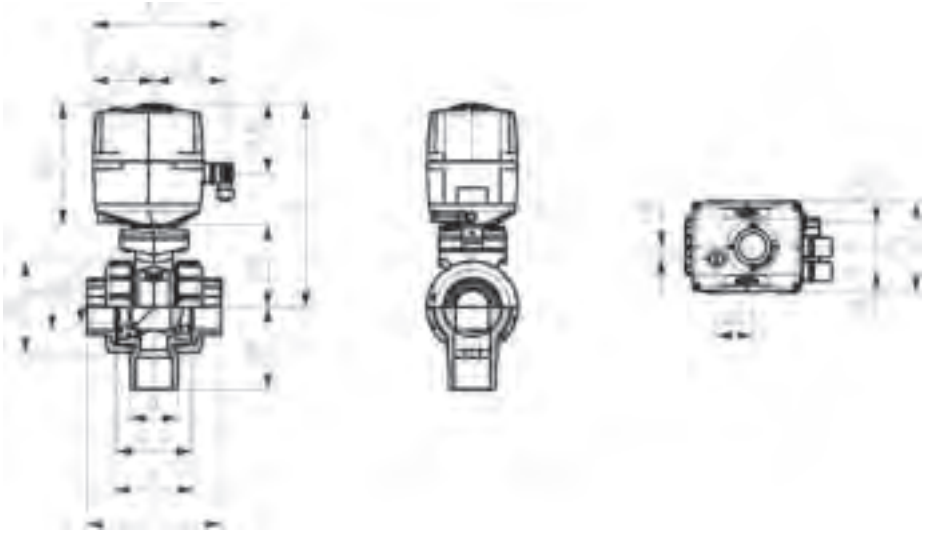

3-Way ball valves pneumatic



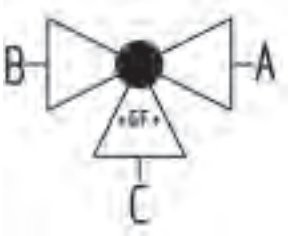

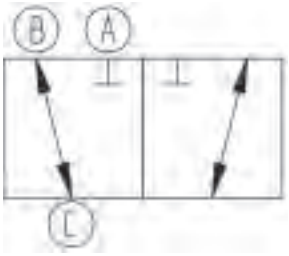

3-Way ball valve type 285 PVC-U
Horizontal/L-port
Without manual override
With solvent cement sockets BS

Model:

- Built on with pneumatic actuator PA11 (DN10/15-25), PA21 (DN32-50)
- Actuator fails safe to the closed position FC
- Basic position B-C opened, activated position A-C opened, see flow scheme
- Control time 90°<) 1-3 s
- For easy installation and removal
- Integrated stainless steel mounting inserts

Size (inch)	DN (mm)	PN (bar)	kv-value (Δp=1 bar) (l/min)	EPDM Code	Weight (kg)	FPM Code	Weight (kg)
⅜	10	10	50	**199 285 742**	1.115	**199 285 752**	1.115
½	15	10	75	**199 285 743**	1.121	**199 285 753**	1.121
¾	20	10	150	**199 285 744**	1.249	**199 285 754**	1.249
1	25	10	280	**199 285 745**	1.439	**199 285 755**	1.439
1 ¼	32	10	480	**199 285 746**	2.539	**199 285 756**	2.539
1 ½	40	10	620	**199 285 747**	2.970	**199 285 757**	2.991
2	50	10	1230	**199 285 748**	4.352	**199 285 758**	4.352

Size (inch)	D (mm)	H (mm)	H1 (mm)	H2 (mm)	H3 (mm)	H4 (mm)	H5 (mm)	H6 (mm)	L (mm)	L1 (mm)	L2 (mm)	L3 (mm)	L4 (mm)	L5 (mm)	L6 (mm)
⅜	50	159	28	62	97	40	77	8	109	194	73	36	25	261	76
½	50	159	28	62	97	40	77	8	112	194	73	36	25	261	76
¾	58	168	32	71	97	40	77	8	131	194	86	43	25	261	76
1	68	168	36	71	97	40	77	8	151	194	99	50	25	261	76
1 ¼	84	203	45	84	119	51	99	9	181	224	120	60	45	305	95
1 ½	97	203	51	84	119	51	99	9	205	224	137	69	45	305	95
2	124	225	65	106	119	51	99	9	261	224	179	89	45	305	95

Size (inch)	L7 (mm)	M	z (mm)	z1 (mm)
⅜	48	6	77	38
½	48	6	77	38
¾	48	6	90	45
1	48	6	103	52
1 ¼	59	8	124	62
1 ½	59	8	145	73
2	59	8	189	94

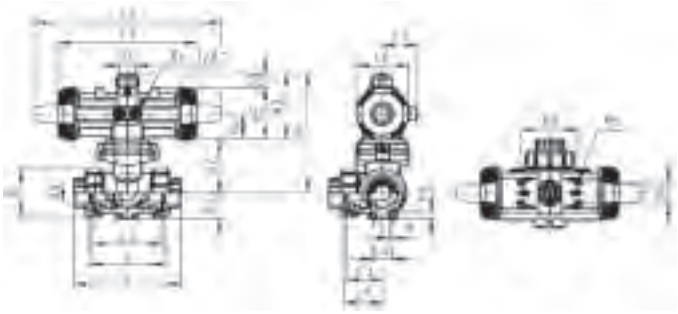



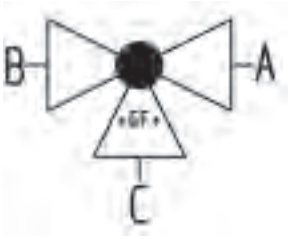

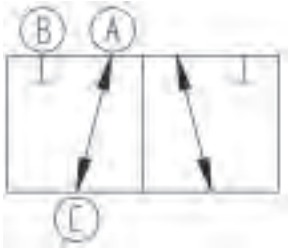

3-Way ball valve type 285 PVC-U
Horizontal/L-port DA (Double acting)
Without manual override
With solvent cement sockets BS

Model:

- Built on with pneumatic actuator PA11 (DN10/15-25), PA21 (DN32-50)
- Basic position A-C opened, activated position B-C opened, see flow scheme
- Control time 90°<) 1-3 s
- For easy installation and removal
- Integrated stainless steel mounting inserts

Size (inch)	DN (mm)	PN (bar)	kv-value (Δp=1 bar) (l/min)	EPDM Code	Weight (kg)	FPM Code	Weight (kg)
⅜	10	10	50	**199 285 762**	0.925	**199 285 772**	0.925
½	15	10	75	**199 285 763**	0.931	**199 285 773**	0.931
¾	20	10	150	**199 285 764**	1.059	**199 285 774**	1.059
1	25	10	280	**199 285 765**	1.249	**199 285 775**	1.249
1 ¼	32	10	480	**199 285 766**	2.115	**199 285 776**	2.115
1 ½	40	10	620	**199 285 767**	2.567	**199 285 777**	2.567
2	50	10	1230	**199 285 768**	3.928	**199 285 778**	3.928

Size (inch)	D (mm)	H (mm)	H1 (mm)	H2 (mm)	H3 (mm)	H4 (mm)	H5 (mm)	H6 (mm)	L (mm)	L1 (mm)	L2 (mm)	L3 (mm)	L4 (mm)	L5 (mm)	L6 (mm)
⅜	50	159	28	62	97	40	77	8	109	194	73	36	25	261	76
½	50	159	28	62	97	40	77	8	112	194	73	36	25	261	76
¾	58	168	32	71	97	40	77	8	131	194	86	43	25	261	76
1	68	168	36	71	97	40	77	8	151	194	99	50	25	261	76
1 ¼	84	203	45	84	119	51	99	9	181	224	120	60	45	305	95
1 ½	97	203	51	84	119	51	99	9	205	224	137	69	45	305	95
2	124	225	65	106	119	51	99	9	261	224	179	89	45	305	95

Size (inch)	L7 (mm)	M	z (mm)	z1 (mm)
⅜	48	6	77	38
½	48	6	77	38
¾	48	6	90	45
1	48	6	103	52
1 ¼	59	8	124	62
1 ½	59	8	145	73
2	59	8	189	94

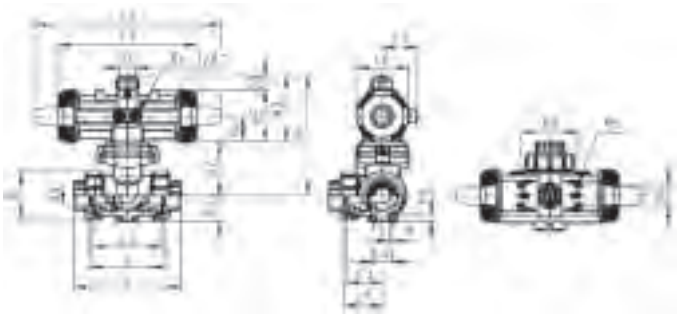



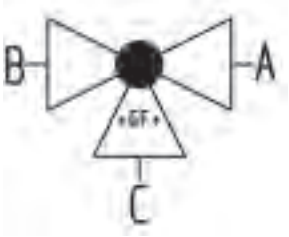

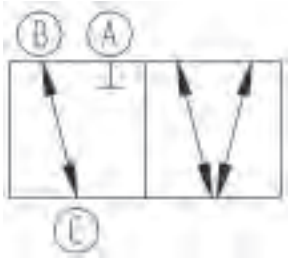

3-Way ball valve type 285 PVC-U
Horizontal/T-port
Without manual override
With solvent cement sockets BS

Model:

- Built on with pneumatic actuator PA11 (DN10/15-25), PA21 (DN32-50)
- Actuator fails safe to the closed position FC
- Basic position B-C opened, activated position A-B-C opened, see flow scheme
- Control time 90°<) 1-3 s
- For easy installation and removal
- Integrated stainless steel mounting inserts

Size (inch)	DN (mm)	PN (bar)	kv-value (Δp=1 bar) (l/min)	EPDM Code	Weight (kg)	FPM Code	Weight (kg)
⅜	10	10	140	**199 285 702**	1.114	**199 285 712**	1.114
½	15	10	200	**199 285 703**	1.120	**199 285 713**	1.120
¾	20	10	470	**199 285 704**	1.247	**199 285 714**	1.247
1	25	10	793	**199 285 705**	1.432	**199 285 715**	1.432
1 ¼	32	10	1290	**199 285 706**	2.528	**199 285 716**	2.528
1 ½	40	10	1910	**199 285 707**	2.970	**199 285 717**	2.970
2	50	10	3100	**199 285 708**	4.307	**199 285 718**	4.307

Size (inch)	D (mm)	H (mm)	H1 (mm)	H2 (mm)	H3 (mm)	H4 (mm)	H5 (mm)	H6 (mm)	L (mm)	L1 (mm)	L2 (mm)	L3 (mm)	L4 (mm)	L5 (mm)	L6 (mm)
⅜	50	159	28	62	97	40	77	8	109	194	73	36	25	261	76
½	50	159	28	62	97	40	77	8	112	194	73	36	25	261	76
¾	58	168	32	71	97	40	77	8	131	194	86	43	25	261	76
1	68	168	36	71	97	40	77	8	151	194	99	50	25	261	76
1 ¼	84	203	45	84	119	51	99	9	181	224	120	60	45	305	95
1 ½	97	203	51	84	119	51	99	9	205	224	137	69	45	305	95
2	124	225	65	106	119	51	99	9	261	224	179	89	45	305	95

Size (inch)	L7 (mm)	M	z (mm)	z1 (mm)
⅜	48	6	77	38
½	48	6	77	38
¾	48	6	90	45
1	48	6	103	52
1 ¼	59	8	124	62
1 ½	59	8	145	73
2	59	8	189	94

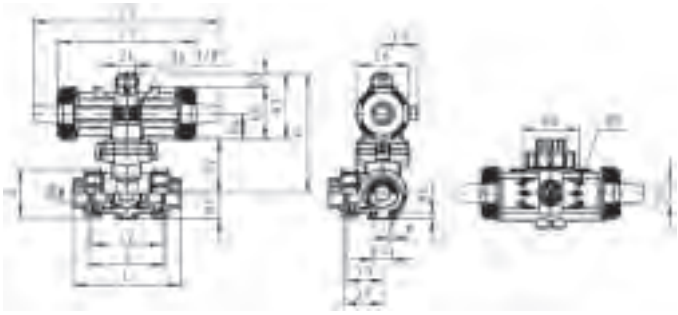



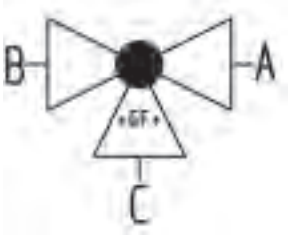

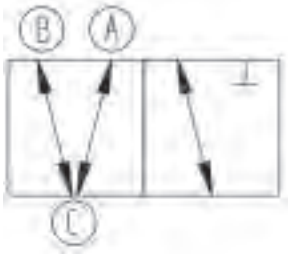

3-Way ball valve type 285 PVC-U
Horizontal/T-port DA (Double acting)
Without manual override
With solvent cement sockets BS

Model:

- Built on with pneumatic actuator PA11 (DN10/15-25), PA21 (DN32-50)
- Basic position A-B-C opened, activated position B-C opened, see flow scheme
- Control time 90°<) 1-3 s
- For easy installation and removal
- Integrated stainless steel mounting inserts

Size (inch)	DN (mm)	PN (bar)	kv-value (Δp=1 bar) (l/min)	EPDM Code	Weight (kg)	FPM Code	Weight (kg)
⅜	10	10	140	**199 285 722**	0.924	**199 285 732**	0.924
½	15	10	200	**199 285 723**	0.930	**199 285 733**	0.930
¾	20	10	470	**199 285 724**	1.057	**199 285 734**	1.057
1	25	10	793	**199 285 725**	1.242	**199 285 735**	1.242
1 ¼	32	10	1290	**199 285 726**	2.104	**199 285 736**	2.104
1 ½	40	10	1910	**199 285 727**	2.546	**199 285 737**	2.546
2	50	10	3100	**199 285 728**	3.883	**199 285 738**	3.883

Size (inch)	D (mm)	H (mm)	H1 (mm)	H2 (mm)	H3 (mm)	H4 (mm)	H5 (mm)	H6 (mm)	L (mm)	L1 (mm)	L2 (mm)	L3 (mm)	L4 (mm)	L5 (mm)	L6 (mm)
⅜	50	159	28	62	97	40	77	8	109	194	73	36	25	261	76
½	50	159	28	62	97	40	77	8	112	194	73	36	25	261	76
¾	58	168	32	71	97	40	77	8	131	194	86	43	25	261	76
1	68	168	36	71	97	40	77	8	151	194	99	50	25	261	76
1 ¼	84	203	45	84	119	51	99	9	181	224	120	60	45	305	95
1 ½	97	203	51	84	119	51	99	9	205	224	137	69	45	305	95
2	124	225	65	106	119	51	99	9	261	224	179	89	45	305	95

Size (inch)	L7 (mm)	M	z (mm)	z1 (mm)
⅜	48	6	77	38
½	48	6	77	38
¾	48	6	90	45
1	48	6	103	52
1 ¼	59	8	124	62
1 ½	59	8	145	73
2	59	8	189	94

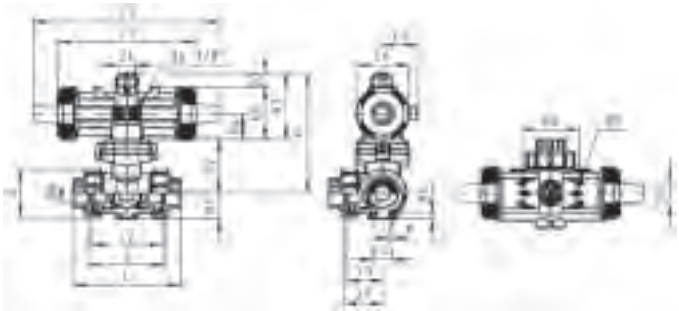



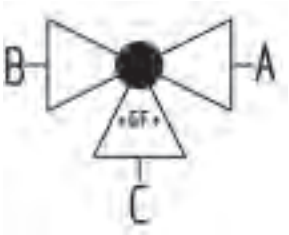

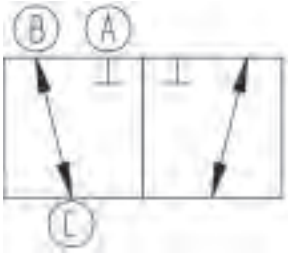

3-Way ball valve type 285 PVC-U
Horizontal/L-port
Without manual override
With solvent cement sockets JIS

Model:

- Built on with pneumatic actuator PA11 (DN10/15-25), PA21 (DN32-50)
- Actuator fails safe to the closed position FC
- Basic position B-C opened, activated position A-C opened, see flow scheme
- Control time 90°<) 1-3 s
- For easy installation and removal
- Integrated stainless steel mounting inserts

Size (inch)	DN (mm)	PN (bar)	kv-value (Δp=1 bar) (l/min)	EPDM Code	Weight (kg)	FPM Code	Weight (kg)
½	15	10	75	**199 285 863**	1.121	**199 285 873**	1.121
¾	20	10	150	**199 285 864**	1.249	**199 285 874**	1.249
1	25	10	280	**199 285 865**	1.439	**199 285 875**	1.439
1 ¼	32	10	480	**199 285 866**	2.539	**199 285 876**	2.539
1 ½	40	10	620	**199 285 867**	2.991	**199 285 877**	2.991
2	50	10	1230	**199 285 868**	4.352	**199 285 878**	4.352

Size (inch)	D (mm)	H (mm)	H1 (mm)	H2 (mm)	H3 (mm)	H4 (mm)	H5 (mm)	H6 (mm)	L (mm)	L1 (mm)	L2 (mm)	L3 (mm)	L4 (mm)	L5 (mm)	L6 (mm)
½	50	159	28	62	97	40	77	8	112	194	73	36	25	261	76
¾	58	168	32	71	97	40	77	8	131	194	86	43	25	261	76
1	68	168	36	71	97	40	77	8	151	194	99	50	25	261	76
1 ¼	84	203	45	84	119	51	99	9	181	224	120	60	45	305	95
1 ½	97	203	51	84	119	51	99	9	205	224	137	69	45	305	95
2	124	225	65	106	119	51	99	9	261	224	179	89	45	305	95

Size (inch)	L7 (mm)	M	z (mm)	z1 (mm)
½	48	6	81	40
¾	48	6	94	47
1	48	6	107	54
1 ¼	59	8	130	65
1 ½	59	8	143	72
2	59	8	185	92

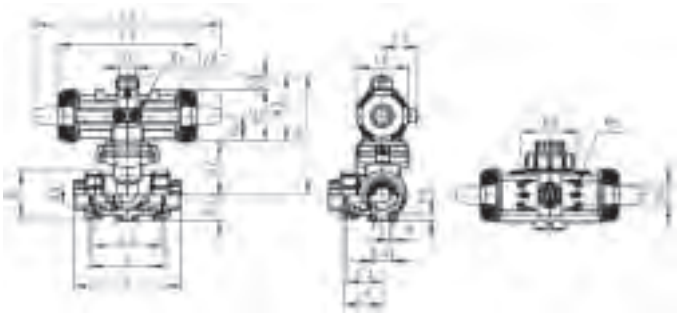



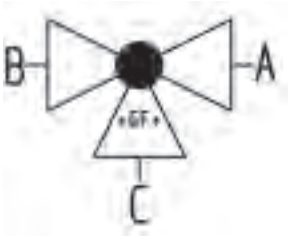

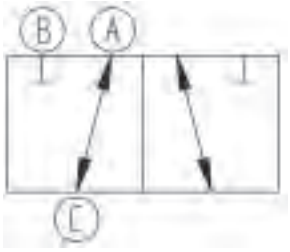

3-Way ball valve type 285 PVC-U
Horizontal/L-port DA (Double acting)
Without manual override
With solvent cement sockets JIS

Model:

- Built on with pneumatic actuator PA11 (DN10/15-25), PA21 (DN32-50)
- Basic position A-C opened, activated position B-C opened, see flow scheme
- Control time 90°<) 1-3 s
- For easy installation and removal
- Integrated stainless steel mounting inserts

Size (inch)	DN (mm)	PN (bar)	kv-value (Δp=1 bar) (l/min)	EPDM Code	Weight (kg)	FPM Code	Weight (kg)
½	15	10	75	**199 285 643**	0.877	**199 285 653**	0.931
¾	20	10	150	**199 285 644**	1.059	**199 285 654**	1.059
1	25	10	280	**199 285 645**	1.249	**199 285 655**	1.249
1 ¼	32	10	480	**199 285 646**	2.115	**199 285 656**	2.115
1 ½	40	10	620	**199 285 647**	2.567	**199 285 657**	2.567
2	50	10	1230	**199 285 648**	3.928	**199 285 658**	3.928

Size (inch)	D (mm)	H (mm)	H1 (mm)	H2 (mm)	H3 (mm)	H4 (mm)	H5 (mm)	H6 (mm)	L (mm)	L1 (mm)	L2 (mm)	L3 (mm)	L4 (mm)	L5 (mm)	L6 (mm)
½	50	159	28	62	97	40	77	8	112	194	73	36	25	261	76
¾	58	168	32	71	97	40	77	8	131	194	86	43	25	261	76
1	68	168	36	71	97	40	77	8	151	194	99	50	25	261	76
1 ¼	84	203	45	84	119	51	99	9	181	224	120	60	45	305	95
1 ½	97	203	51	84	119	51	99	9	205	224	137	69	45	305	95
2	124	225	65	106	119	51	99	9	261	224	179	89	45	305	95

Size (inch)	L7 (mm)	M	z (mm)	z1 (mm)
½	48	6	81	40
¾	48	6	94	47
1	48	6	107	54
1 ¼	59	8	130	65
1 ½	59	8	143	72
2	59	8	185	92

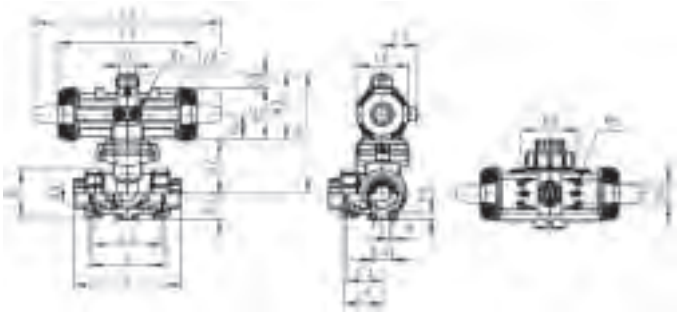



3-Way ball valve type 288 PVC-U
Vertical diverter ball
Without manual override
With solvent cement sockets JIS

Model:

- Vertical inlet solvent cement spigot metric
- Built on with pneumatic actuator PA11 (DN10/15-25), PA21 (DN32-50)
- Actuator fails safe to the closed position FC
- Basic position A-C opened, activated position B-C opened, see flow scheme
- Control time 90°<) 1-3 s
- Easy installation and removal using union on third outlet

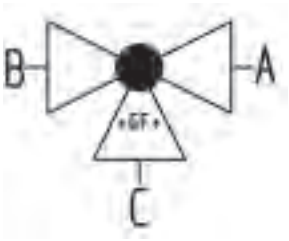

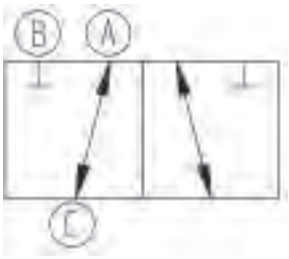

Size (inch)	DN (mm)	PN (bar)	kv-value (Δp=1 bar) (l/min)	EPDM Code	Weight (kg)	FPM Code	Weight (kg)
½	15	10	77	**199 288 123**	1.035	**199 288 133**	1.035
¾	20	10	146	**199 288 124**	1.141	**199 288 134**	1.141
1	25	10	260	**199 288 125**	1.253	**199 288 135**	1.253
1 ¼	32	10	437	**199 288 126**	2.212	**199 288 136**	2.212
1 ½	40	10	667	**199 288 127**	2.466	**199 288 137**	2.466
2	50	10	1293	**199 288 128**	3.219	**199 288 138**	3.219

Size (inch)	D (mm)	H (mm)	H1 (mm)	H2 (mm)	H3 (mm)	H4 (mm)	H5 (mm)	L (mm)	L1 (mm)	L2 (mm)	L3 (mm)	L4 (mm)	L5 (mm)	z (mm)
½	50	159	62	62	97	40	77	95	194	56	261	76	48	64
¾	58	168	72	71	97	40	77	111	194	66	261	76	48	74
1	68	168	77	71	97	40	77	123	194	71	261	76	48	79
1 ¼	84	203	87	84	119	51	99	146	224	85	305	95	59	95
1 ½	97	203	97	84	119	51	99	157	224	89	305	95	59	95
2	124	225	112	106	119	51	99	183	224	101	305	95	59	107

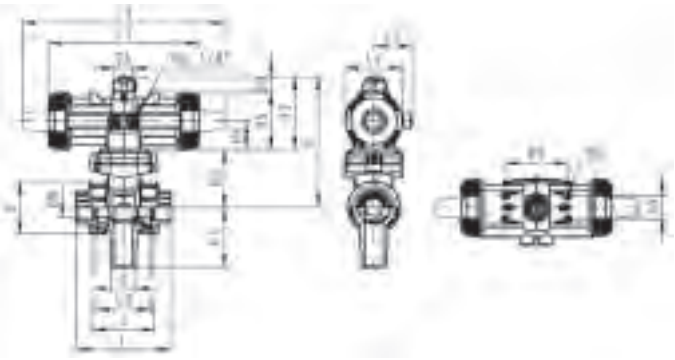

Metering ball valves type 523



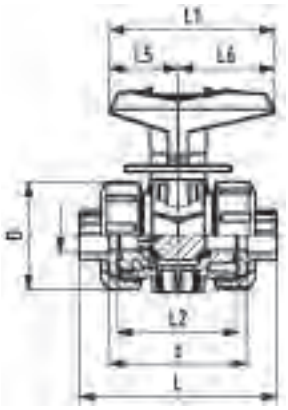

Metering ball valve type 523 PVC-U
With mounting inserts
With solvent cement sockets Inch BS

Model:

- Micro-doser
- Excellent control characteristics
- Designed for easy installation and removal
- Ball seals PTFE
- Angle of operation 180° with scale
- Integrated stainless steel mounting inserts
- Z-length, end connectors and union nuts **not compatible** to Type 323

Option:

- Other materials on demand

Size (inch)	DN (mm)	PN (bar)	kv-value (Δp=1 bar) (l/min)	EPDM Code	Weight (kg)	FPM Code	Weight (kg)
⅜	10	10	11	**161 523 501**	0.170	**161 523 511**	0.170
½	15	10	20	**161 523 502**	0.170	**161 523 512**	0.170

Size (inch)	D (mm)	H (mm)	H1 (mm)	L (mm)	L1 (mm)	L2 (mm)	L4 (mm)	L5 (mm)	L6 (mm)	z (mm)
⅜	50	68	27	92	77	56	25	32	45	60
½	50	68	27	95	77	56	25	32	45	60



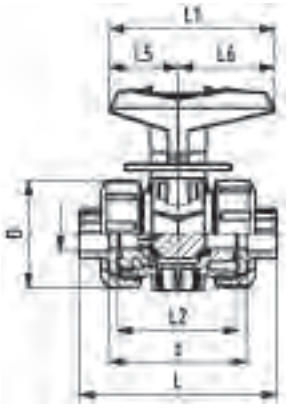

Metering ball valve type 523 PVC-U
With mounting inserts
With solvent cement sockets JIS

Model:

- Micro-doser
- Excellent control characteristics
- Designed for easy installation and removal
- Ball seals PTFE
- Angle of operation 180° with scale
- Integrated stainless steel mounting inserts
- Z-length, end connectors and union nuts **not compatible** to Type 323

Option:

- Other materials on demand

Size (inch)	DN (mm)	PN (bar)	kv-value (Δp=1 bar) (l/min)	EPDM Code	Weight (kg)	FPM Code	Weight (kg)
½	15	10	20	**161 523 562**	0.170	**161 523 572**	0.170

Size (inch)	D (mm)	H (mm)	H1 (mm)	L (mm)	L1 (mm)	L2 (mm)	L4 (mm)	L5 (mm)	L6 (mm)	z (mm)
½	50	68	27	95	77	56	25	32	45	64

Laboratory ball valves type 322



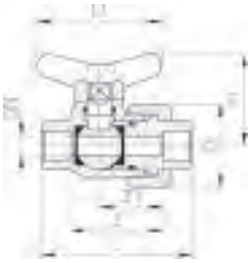

Laboratory ball cock type 322 PVC-U
With solvent cement sockets Inch BS/ASTM

Model:

- Disconnection one end only
- Ball seals PTFE
- Angle of operation 90°

DN (mm)	PN (bar)	EPDM Code	Weight (kg)	FPM Code	Weight (kg)
6	10	**161 324 150**	0.043	**161 324 199**	0.042
8	10	**161 324 200**	0.044	**161 324 249**	0.045

D (mm)	H (mm)	L (mm)	L1 (mm)	z (mm)	z1 (mm)	Inch (inch)
34	38	52	45	26	15	1/8
34	38	60	45	36	25	1/4

Diaphragm valves





Diaphragm valve type 514 PVC-U
With solvent cement sockets BS

Model:

- Double flow rate compared to predecessor
- One housing nut replaces four screws
- Handwheel with built-in locking mechanism
- For easy installation and removal
- Short overall length

Option:

- Individual configuration of the valve (see diagram)
- Self adjusting multifunctional module with integrated limit switches
- PN16 available as a configuration

Size (inch)	DN (mm)	PN (bar)	kv-value (Δp=1 bar) (l/min)	NBR Code	Weight (kg)	EPDM Code	Weight (kg)	PTFE/EPDM Code	Weight (kg)
½	15	10	125	**161 514 502**	0.396	**161 514 512**	0.296	**161 514 532**	0.295
¾	20	10	271	**161 514 503**	0.525	**161 514 513**	0.422	**161 514 533**	0.536
1	25	10	481	**161 514 504**	1.159	**161 514 514**	0.671	**161 514 534**	1.179
1 ¼	32	10	759	**161 514 505**	1.419	**161 514 515**	0.942	**161 514 535**	1.439
1 ½	40	10	1263	**161 514 506**	2.528	**161 514 516**	1.636	**161 514 536**	2.558
2	50	10	1728	**161 514 507**	3.409	**161 514 517**	2.514	**161 514 537**	2.564

Size (inch)	FPM Code	Weight (kg)	D (mm)	D2 (mm)	D3 (mm)	H (mm)	H1 (mm)	H2 (mm)	L (mm)	L2 (mm)	M	z (mm)	Lift = Hx (mm)
½	**161 514 562**	0.396	65	65	43	73	14	12	128	25	M6	96	7
¾	**161 514 563**	0.432	80	65	51	81	18	12	152	25	M6	114	10
1	**161 514 564**	0.687	88	87	58	107	22	12	166	25	M6	122	13
1 ¼	**161 514 565**	1.419	101	87	72	115	26	15	192	45	M8	140	15
1 ½	**161 514 566**	2.528	117	135	83	148	32	15	222	45	M8	160	19
2	**161 514 567**	3.409	144	135	100	166	39	15	266	45	M8	190	25





Diaphragm valve type 514 PVC-U
With solvent cement sockets JIS

Model:

- Double flow rate compared to predecessor
- One housing nut replaces four screws
- Handwheel with built-in locking mechanism
- For easy installation and removal
- Short overall length

Option:

- Individual configuration of the valve (see diagram)
- Self adjusting multifunctional module with integrated limit switches
- PN16 available as a configuration

Size (inch)	DN (mm)	PN (bar)	kv-value (Δp=1 bar) (l/min)	EPDM Code	Weight (kg)	PTFE/EPDM Code	Weight (kg)
½	15	10	125	**161 514 812**	0.433	**161 514 832**	0.548
¾	20	10	271	**161 514 813**	0.421	**161 514 833**	0.538
1	25	10	481	**161 514 814**	1.163	**161 514 834**	1.183
1 ¼	32	10	759	**161 514 815**	1.437	**161 514 835**	1.457
1 ½	40	10	1263	**161 514 816**	1.640	**161 514 836**	2.588
2	50	10	1728	**161 514 817**	2.530	**161 514 837**	3.453

table continued on the next page



Size (inch)	D (mm)	D2 (mm)	D3 (mm)	H (mm)	H1 (mm)	H2 (mm)	L (mm)	L2 (mm)	M	z (mm)	Lift = Hx (mm)
½	80	65	51	81	18	12	152	25	M6	120	10
¾	80	65	51	81	18	12	152	25	M6	114	10
1	88	87	58	107	22	12	166	25	M6	122	13
1 ¼	101	87	72	115	26	15	192	45	M8	140	15
1 ½	117	135	83	148	32	15	222	45	M8	160	19
2	144	135	100	166	39	15	266	45	M8	190	25



Diaphragm valve type 514 PVC-U
With threaded sockets Rc

Model:

- Double flow rate compared to predecessor
- One housing nut replaces four screws
- Handwheel with built-in locking mechanism
- For easy installation and removal
- Short overall length

Option:

- Individual configuration of the valve (see diagram)
- Self adjusting multifunctional module with integrated limit switches
- PN16 available as a configuration



Rc (inch)	DN (mm)	PN (bar)	kv-value (Δp=1 bar) (l/min)	EPDM Code	Weight (kg)	PTFE/EPDM Code	Weight (kg)
½	15	10	125	**161 514 912**	0.537	**161 514 932**	0.548
¾	20	10	271	**161 514 913**	0.528	**161 514 933**	0.540
1	25	10	481	**161 514 914**	1.165	**161 514 934**	1.185
1 ¼	32	10	759	**161 514 915**	1.433	**161 514 935**	1.453
1 ½	40	10	1263	**161 514 916**	2.556	**161 514 936**	2.586
2	50	10	1728	**161 514 917**	3.497	**161 514 937**	3.525

Rc (inch)	D (mm)	D2 (mm)	D3 (mm)	H (mm)	H1 (mm)	H2 (mm)	L (mm)	L2 (mm)	M	z (mm)	Lift = Hx (mm)
½	80	65	51	81	18	12	152	25	M6	120	10
¾	80	65	51	81	18	12	152	25	M6	114	10
1	88	87	58	107	22	12	166	25	M6	122	13
1 ¼	101	87	72	115	26	15	192	45	M8	140	15
1 ½	117	135	83	148	32	15	222	45	M8	160	19
2	144	135	100	166	39	15	266	45	M8	190	25



Diaphragm valve type 517 PVC-U
With fixed flanges PVC-U JIS

Model:

- Double flow rate compared to predecessor
- One housing nut replaces four screws
- Handwheel with built-in locking mechanism
- Joining faces flat/serrated
- Connecting dimension: JIS B2238/39 10K

Option:

- Individual configuration of the valve (see diagram)
- Self adjusting multifunctional module with integrated limit switches

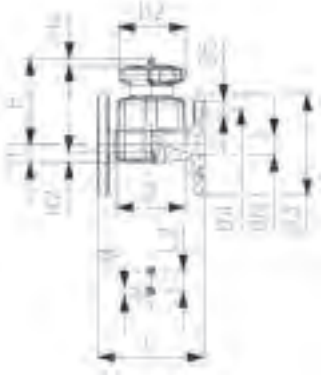

Size (inch)	DN (mm)	PN (bar)	kv-value (Δp=1 bar) (l/min)	EPDM Code	Weight (kg)	PTFE/EPDM Code	Weight (kg)
½	15	10	125	**161 517 912**	0.528	**161 517 932**	0.538
¾	20	10	271	**161 517 913**	0.626	**161 517 933**	0.637
1	25	10	481	**161 517 914**	1.334	**161 517 934**	1.354
1 ¼	32	10	759	**161 517 915**	1.745	**161 517 935**	1.765
1 ½	40	10	1263	**161 517 916**	2.814	**161 517 936**	2.844
2	50	10	1728	**161 517 917**	3.652	**161 517 937**	3.680

Size (inch)	D (mm)	D2 (mm)	D3 (mm)	D4 (mm)	D5 (mm)	H (mm)	H1 (mm)	H2 (mm)	L (mm)	L2 (mm)	M	Lift = Hx (mm)
½	65	65	95	70	15	73	14	12	110	25	M6	7
¾	80	65	100	75	15	81	18	12	120	25	M6	10
1	88	87	125	90	19	107	22	12	130	25	M6	13
1 ¼	101	87	135	100	19	115	26	15	180	45	M8	15
1 ½	117	135	140	105	19	148	32	15	180	45	M8	19
2	144	135	155	120	19	166	39	15	210	45	M8	25





Diaphragm valve type 317 PVC-U
With flanges PVC-U JIS

Model:

- Flat sealing faces
- Overall length according to EN 558

Option:

- Handwheel lockable DN15-65 (basic version not lockable)

Size (inch)	DN (mm)	PN (bar)	kv-value (Δp=1 bar) (l/min)	EPDM Code	PTFE with EPDM supp. diaphragm Code	Weight (kg)
2 ½	65	10	992	**161 317 868**	**161 317 883**	4.300
3	80	10	1700	**161 317 824**	**161 317 839**	9.700
4	100	10	2700	**161 317 825**	**161 317 840**	11.500
6	150	7	6033	**161 317 827**		

table continued on the next page

Size (inch)	D (mm)	D1 (mm)	D2 (mm)	D3 (mm)	H (mm)	H1 (mm)	H2 (mm)	L (mm)	L1 (mm)	L2 (mm)	L3 (mm)	M	Lift = Hx (mm)	AL
2 ½	175	140	152	18	201	46	15	250		70		M8	30	4
3	185	150	270	18	265	57	23	280	35	120		M12	40	8
4	210	175	270	18	304	69	23	340	35	120		M12	50	8
6	230	240	400	22	437	108	23	480	26	100	200	M12	70	8

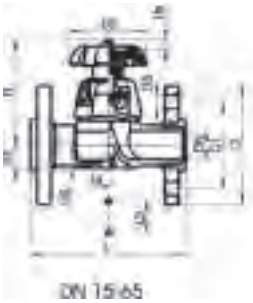

DN 15-65

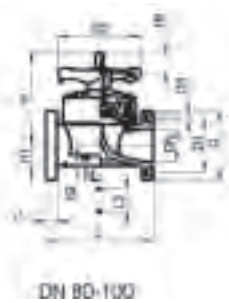

DN 80-100

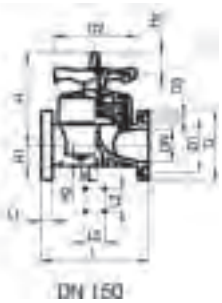

DN 150

Diaphragm valves pneumatic

Diaphragm valves pneumatic type 604 / 605





Diaphragm valve type 604 PVC-U
Unions with solvent cement socket BS

Model:

- Compact full plastic design without screws
- High flow rate
- Actuator housing with thread for easy maintenance
- Quick opening & closing times
- For easy installation and removal
- Market standard installation length

Option:

- Individual configuration of the valve (see diagram)

Actuator	d (mm)	DN (mm)	PN (bar)	kv-value (Δp=1 bar) (l/min)	EPDM Code	FPM Code	Weight (kg)	PTFE/EPDM Code
FC	20	15	6	125	**161 604 512**	**161 604 562**	0.40	**161 604 532**
FO	20	15	6	125	**161 604 514**	**161 604 564**	0.37	**161 604 534**
DA	20	15	6	125	**161 604 515**	**161 604 565**	0.35	**161 604 535**

Actuator	D (mm)	D1_G (inch)	D3 (mm)	H (mm)	H1 (mm)	H2 (mm)	H3 (mm)	H4 (mm)	H7 (mm)	L (mm)	L2 (mm)	M	z (mm)	Lift = Hx (mm)
FC	65	¼	43	89	14	12	46	30	42	131	25	M6	98	6
FO	65	¼	43	89	14	12	46	30	42	131	25	M6	98	6
DA	65	¼	43	89	14	12	46	30	42	131	25	M6	98	6





Diaphragm valve type 604 PVC-U
Unions with solvent cement socket JIS

Model:

- Compact full plastic design without screws
- High flow rate
- Actuator housing with thread for easy maintenance
- Quick opening & closing times
- For easy installation and removal
- Market standard installation length

Option:

- Individual configuration of the valve (see diagram)

Actuator	d (mm)	DN (mm)	PN (bar)	kv-value (Δp=1 bar) (l/min)	EPDM Code	FPM Code	Weight (kg)	PTFE/EPDM Code
FC	20	15	6	125	**161 604 812**	**161 604 862**	0.40	**161 604 832**
FO	20	15	6	125	**161 604 814**	**161 604 864**	0.37	**161 604 834**
DA	20	15	6	125	**161 604 815**	**161 604 865**	0.35	**161 604 835**

Actuator	D (mm)	D1_G (inch)	D3 (mm)	H (mm)	H1 (mm)	H2 (mm)	H3 (mm)	H4 (mm)	H7 (mm)	L (mm)	L2 (mm)	M	z (mm)	Lift = Hx (mm)
FC	65	¼	43	89	14	12	46	30	42	128	25	M6	102	6
FO	65	¼	43	89	14	12	46	30	42	128	25	M6	102	6
DA	65	¼	43	89	14	12	46	30	42	128	25	M6	102	6

DIASTAR Six





Diaphragm valve DIASTAR Six PVC-U
FC (Fail safe to close)
Unions with solvent cement sockets BS

Model:

- Double flow rate compared to predecessor
- One housing nut replaces four screws
- Rotating air connection at 90° intervals
- For easy installation and removal
- Short overall length

Option:

- Individual configuration of the valve (see diagram)
- PN16 available as a configuration

Size (inch)	DN (mm)	PN (bar)	kv-value (Δp=1 bar) (l/min)	EPDM Code	Weight (kg)
½	15	6	125	**161 614 512**	0.564
¾	20	6	271	**161 614 513**	1.044
1	25	6	481	**161 614 514**	1.273
1 ¼	32	6	759	**161 614 515**	2.058
1 ½	40	6	960	**161 614 516**	2.678
2	50	6	1181	**161 614 517**	3.786

Size (inch)	D (mm)	D1_G (inch)	H (mm)	H1 (mm)	H2 (mm)	H3 (mm)	H7 (mm)	L (mm)	L2 (mm)	M	z (mm)	Lift = Hx (mm)
½	68	⅛	101	14	12	60	43	128	25	M6	96	7
¾	96	⅛	132	18	12	73	57	152	25	M6	114	10
1	96	⅛	143	22	12	84	57	166	25	M6	122	13
1 ¼	120	⅛	173	26	15	99	69	192	45	M8	140	14
1 ½	120	⅛	193	32	15	119	69	222	45	M8	160	16
2	120	⅛	205	39	15	132	69	266	45	M8	190	16





Diaphragm valve DIASTAR Six PVC-U
FC (Fail safe to close)
Unions with solvent cement sockets JIS

Model:

- Double flow rate compared to predecessor
- One housing nut replaces four screws
- Rotating air connection at 90° intervals
- For easy installation and removal
- Short overall length

Option:

- Individual configuration of the valve (see diagram)
- PN16 available as a configuration

Size (inch)	DN (mm)	PN (bar)	kv-value (Δp=1 bar) (l/min)	EPDM Code	Weight (kg)
½	15	6	125	**161 614 812**	1.019
¾	20	6	271	**161 614 813**	1.010
1	25	6	481	**161 614 814**	1.277
1 ¼	32	6	759	**161 614 815**	2.076
1 ½	40	6	960	**161 614 816**	2.759
2	50	6	1181	**161 614 817**	3.802

Size (inch)	D (mm)	D1_G (inch)	H (mm)	H1 (mm)	H2 (mm)	H3 (mm)	H7 (mm)	L (mm)	L2 (mm)	M	z (mm)	Lift = Hx (mm)
½	96	⅛	132	18	12	73	57	152	25	M6	120	10
¾	96	⅛	132	18	12	73	57	152	25	M6	114	10
1	96	⅛	143	22	12	84	57	166	25	M6	122	13
1 ¼	120	⅛	173	26	15	99	69	192	45	M6	140	14
1 ½	120	⅛	193	32	15	119	69	222	45	M6	160	16
2	120	⅛	205	39	15	132	69	266	45	M6	190	16





Diaphragm valve DIASTAR Six PVC-U
FC (Fail safe to close)
Unions with threaded sockets Rc

Model:

- Double flow rate compared to predecessor
- One housing nut replaces four screws
- Rotating air connection at 90° intervals
- For easy installation and removal
- Short overall length

Option:

- Individual configuration of the valve (see diagram)
- PN16 available as a configuration

Rc (inch)	DN (mm)	PN (bar)	kv-value (Δp=1 bar) (l/min)	EPDM Code	Weight (kg)
½	15	6	125	**161 614 912**	1.056
¾	20	6	271	**161 614 913**	1.048
1	25	6	481	**161 614 914**	1.279
1 ¼	32	6	759	**161 614 915**	2.072
1 ½	40	6	960	**161 614 916**	2.706
2	50	6	1181	**161 614 917**	3.874

table continued on the next page



Rc (inch)	D (mm)	D1_G (inch)	H (mm)	H1 (mm)	H2 (mm)	H3 (mm)	H7 (mm)	L (mm)	L2 (mm)	M	z (mm)	Lift = Hx (mm)
½	96	⅛	132	18	12	73	57	152	25	M6	120	10
¾	96	⅛	132	18	12	73	57	152	25	M6	114	10
1	96	⅛	143	22	12	84	57	166	25	M6	122	13
1 ¼	120	⅛	173	26	15	99	69	192	45	M6	140	14
1 ½	120	⅛	193	32	15	119	69	222	45	M6	160	16
2	120	⅛	205	39	15	132	69	266	45	M6	190	16



Diaphragm valve DIASTAR Six PVC-U
FC (Fail safe to close)
With fixed flanges PVC-U JIS

Model:

- Double flow rate compared to predecessor
- One housing nut replaces four screws
- Rotating air connection at 90° intervals
- Joining faces flat/serrated
- Connecting dimension: JIS B2238/39 10K

Option:

- Individual configuration of the valve (see diagram)

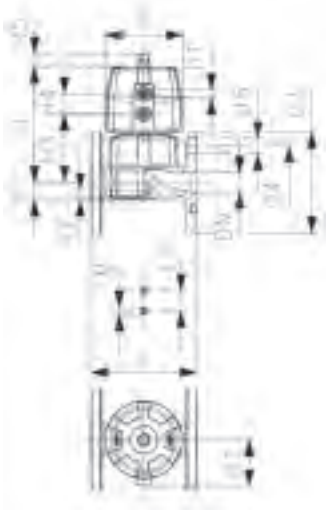

Size (inch)	DN (mm)	PN (bar)	kv-value (Δp=1 bar) (l/min)	EPDM Code	Weight (kg)
½	15	6	125	**161 617 912**	0.696
¾	20	6	271	**161 617 913**	1.145
1	25	6	481	**161 617 914**	1.448
1 ¼	32	6	759	**161 617 915**	2.384
1 ½	40	6	960	**161 617 916**	2.964
2	50	6	1181	**161 617 917**	4.029

Size (inch)	D (mm)	D1_G (inch)	D3 (mm)	D4 (mm)	D5 (mm)	H (mm)	H1 (mm)	H2 (mm)	H3 (mm)	H7 (mm)	L (mm)	L2 (mm)	M	Lift = Hx (mm)
½	68	⅛	95	70	15	101	14	12	60	43	110	25	M6	7
¾	96	⅛	100	75	15	132	18	12	73	57	120	25	M6	10
1	96	⅛	125	90	15	143	22	12	84	57	130	25	M6	13
1 ¼	120	⅛	135	100	19	173	26	15	99	69	180	45	M6	14
1 ½	120	⅛	140	105	19	193	32	15	119	69	180	45	M6	16
2	120	⅛	155	120	19	205	39	15	132	69	210	45	M6	16

DIASTAR Ten





Diaphragm valve DIASTAR Ten PVC-U
FC (Fail safe to close)
Unions with solvent cement sockets BS

Model:

- Double flow rate compared to predecessor
- One housing nut replaces four screws
- Rotating air connection at 90° intervals
- For easy installation and removal
- Short overall length

Option:

- Individual configuration of the valve (see diagram)
- Comprehensive range of accessories available
- PN16 available as a configuration

* PN: PTFE
Working Pressure: **one side**

Size (inch)	DN (mm)	PN (psi)	PN* (bar)	kv-value (Δp=1 bar) (l/min)	EPDM Code	Weight (kg)	PTFE/EPDM Code	Weight (kg)
½	15	150/150*	10/10*	125	**161 624 512**	0.590	**161 624 532**	0.600
¾	20	150/150*	10/10*	271	**161 624 513**	1.119	**161 624 533**	1.130
1	25	150/150*	10/10*	481	**161 624 514**	1.345	**161 624 534**	1.365
1 ¼	32	150/150*	10/10*	759	**161 624 515**	2.208	**161 624 535**	2.228
1 ½	40	150/150*	10/10*	1263	**161 624 516**	3.816	**161 624 536**	3.987
2	50	150/90*	10/6*	1728	**161 624 517**	4.707	**161 624 537**	4.735

Size (inch)	D (mm)	D1_G (inch)	H (mm)	H1 (mm)	H2 (mm)	H3 (mm)	H4 (mm)	H5 (mm)	H7 (mm)	L (mm)	L2 (mm)	M	z (mm)	Lift = Hx (mm)
½	68	⅛	101	14	12	60	24	16	43	128	25	M6	96	7
¾	96	⅛	132	18	12	73	25	16	57	152	25	M6	114	10
1	96	⅛	143	22	12	84	25	16	57	166	25	M6	122	13
1 ¼	120	⅛	173	26	15	99	26	26	69	192	45	M8	140	15
1 ½	150	¼	214	32	15	119	36	26	88	222	45	M8	160	19
2	150	¼	226	39	15	132	36	26	88	266	45	M8	190	23





Diaphragm valve DIASTAR Ten PVC-U
FC (Fail safe to close)
Unions with solvent cement sockets JIS

Model:

- Double flow rate compared to predecessor
- One housing nut replaces four screws
- Rotating air connection at 90° intervals
- For easy installation and removal
- Short overall length

Option:

- Individual configuration of the valve (see diagram)
- Comprehensive range of accessories available
- PN16 available as a configuration

* PN: PTFE
Working Pressure: **one side**

Size (inch)	DN (mm)	PN* (bar)	kv-value (Δp=1 bar) (l/min)	EPDM Code	Weight (kg)	PTFE/EPDM Code	Weight (kg)
½	15	10/10*	125	**161 624 812**	1.114	**161 624 832**	1.142
¾	20	10/10*	271	**161 624 813**	1.108	**161 624 833**	1.114
1	25	10/10*	481	**161 624 814**	1.341	**161 624 834**	1.369
1 ¼	32	10/10*	759	**161 624 815**	2.226	**161 624 835**	2.246
1 ½	40	10/10*	1263	**161 624 816**	3.846	**161 624 836**	3.991
2	50	10/6*	1728	**161 624 817**	4.608	**161 624 837**	4.751

Size (inch)	D (mm)	D1_G (inch)	H (mm)	H1 (mm)	H2 (mm)	H3 (mm)	H4 (mm)	H5 (mm)	H7 (mm)	L (mm)	L2 (mm)	M	z (mm)	Lift = Hx (mm)
½	96	⅛	132	18	12	73	25	16	57	152	25	M6	120	10
¾	96	⅛	132	18	12	73	25	16	57	152	25	M6	144	10
1	96	⅛	143	22	12	84	25	16	57	166	25	M6	122	13
1 ¼	120	⅛	173	26	15	99	26	26	69	192	45	M8	140	15
1 ½	150	¼	214	32	15	119	36	26	88	222	45	M8	160	19
2	150	¼	226	39	15	132	36	26	88	266	45	M8	190	23





Diaphragm valve DIASTAR Ten PVC-U
FC (Fail safe to close)
Unions with threaded sockets Rc

Model:

- Double flow rate compared to predecessor
- One housing nut replaces four screws
- Rotating air connection at 90° intervals
- For easy installation and removal
- Short overall length

Option:

- Individual configuration of the valve (see diagram)
- Comprehensive range of accessories available
- PN16 available as a configuration

* PN: PTFE
Working Pressure: **one side**

Rc (inch)	DN (mm)	PN* (bar)	kv-value (Δp=1 bar) (l/min)	EPDM Code	Weight (kg)	PTFE/EPDM Code	Weight (kg)
½	15	10/10*	125	**161 624 912**	1.131	**161 624 932**	1.142
¾	20	10/10*	271	**161 624 913**	1.123	**161 624 933**	1.134
1	25	10/10*	481	**161 624 914**	1.351	**161 624 934**	1.371
1 ¼	32	10/10*	759	**161 624 915**	2.222	**161 624 935**	2.242
1 ½	40	10/10*	1263	**161 624 916**	3.844	**161 624 936**	3.874
2	50	10/6*	1728	**161 624 917**	4.795	**161 624 937**	4.823

table continued on the next page



Rc (inch)	D (mm)	D1_G (inch)	H (mm)	H1 (mm)	H2 (mm)	H3 (mm)	H4 (mm)	H5 (mm)	H7 (mm)	L (mm)	L2 (mm)	M	z (mm)	Lift = Hx (mm)
½	96	⅛	132	18	12	73	25	16	57	152	25	M6	120	10
¾	96	⅛	132	18	12	73	25	16	57	152	25	M6	114	10
1	96	⅛	143	22	12	84	25	16	57	166	25	M6	122	13
1 ¼	120	⅛	173	26	15	99	26	26	69	192	45	M8	140	15
1 ½	120	¼	214	32	15	119	36	26	88	222	45	M8	160	19
2	120	¼	226	39	15	132	36	26	88	266	45	M8	190	23



Diaphragm valve DIASTAR Ten PVC-U
FC (Fail safe to close)
With fixed flanges PVC-U JIS

Model:

- Double flow rate compared to predecessor
- One housing nut replaces four screws
- Rotating air connection at 90° intervals
- Joining faces flat/serrated
- Connecting dimension: JIS B2238/39 10K

Option:

- Individual configuration of the valve (see diagram)
- Comprehensive range of accessories available

* PN: PTFE
Working Pressure: **one side**

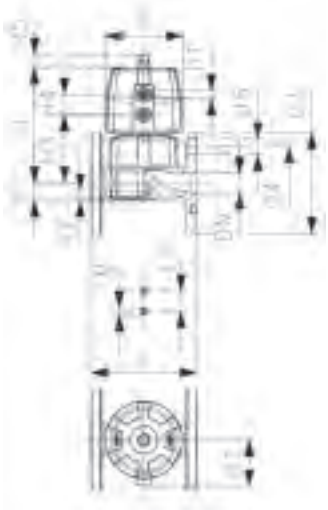

Size (inch)	DN (mm)	PN* (bar)	kv-value (Δp=1 bar) (l/min)	EPDM Code	Weight (kg)	PTFE/EPDM Code	Weight (kg)
½	15	10/10*	125	**161 627 912**	0.722	**161 627 932**	0.732
¾	20	10/10*	271	**161 627 913**	1.220	**161 627 933**	1.231
1	25	10/10*	481	**161 627 914**	1.520	**161 627 934**	1.540
1 ¼	32	10/10*	759	**161 627 915**	2.534	**161 627 935**	2.554
1 ½	40	10/10*	1263	**161 627 916**	4.102	**161 627 936**	4.132
2	50	10/6*	1728	**161 627 917**	4.950	**161 627 937**	4.978

Size (inch)	D (mm)	D1_G (inch)	D3 (mm)	D4 (mm)	D5 (mm)	H (mm)	H1 (mm)	H2 (mm)	H3 (mm)	H4 (mm)	H5 (mm)	H7 (mm)	L (mm)	L2 (mm)	M
½	68	⅛	95	70	15	101	14	12	60	24	16	43	110	25	M6
¾	96	⅛	100	75	15	132	18	12	73	25	16	57	120	25	M6
1	96	⅛	125	90	19	143	22	12	84	25	16	57	130	25	M6
1 ¼	120	⅛	135	100	19	173	26	15	99	26	26	69	180	45	M8
1 ½	150	¼	140	105	19	193	32	15	119	36	26	88	180	45	M8
2	150	¼	155	120	19	205	39	15	132	36	26	88	210	45	M8

Size (inch)	Lift = Hx (mm)
½	7
¾	10
1	13
1 ¼	15
1 ½	19
2	23





Diaphragm valve DIASTAR Ten PVC-U
FO (Fail safe to open)
Unions with solvent cement sockets BS

Model:

- Double flow rate compared to predecessor
- One housing nut replaces four screws
- Rotating air connection at 90° intervals
- For easy installation and removal
- Short overall length

Option:

- Individual configuration of the valve (see diagram)
- Comprehensive range of accessories available
- PN16 available as a configuration

* PN: PTFE

Working Pressure: **one side**

Size (inch)	DN (mm)	PN* (bar)	kv-value (Δp=1 bar) (l/min)	EPDM Code	Weight (kg)	PTFE/EPDM Code	Weight (kg)
½	15	10/10*	125	**161 644 512**	0.504	**161 644 532**	0.550
¾	20	10/10*	271	**161 644 513**	0.945	**161 644 533**	0.956
1	25	10/10*	481	**161 644 514**	1.165	**161 644 534**	1.152
1 ¼	32	10/10*	759	**161 644 515**	1.848	**161 644 535**	1.868
1 ½	40	10/10*	1263	**161 644 516**	3.726	**161 644 536**	3.756
2	50	10/10*	1728	**161 644 517**	4.617	**161 644 537**	4.645

Size (inch)	D (mm)	D1_G (inch)	H (mm)	H1 (mm)	H2 (mm)	H3 (mm)	H4 (mm)	H5 (mm)	H7 (mm)	L (mm)	L2 (mm)	M	z (mm)	Lift = Hx (mm)
½	68	⅛	101	14	12	60	24	16	43	128	25	M6	96	7
¾	96	⅛	132	18	12	73	25	16	57	152	25	M6	114	10
1	96	⅛	143	22	12	84	25	16	57	166	25	M6	122	13
1 ¼	120	⅛	173	26	15	99	26	26	69	192	45	M8	140	15
1 ½	150	¼	214	32	15	119	36	26	88	222	45	M8	160	19
2	150	¼	226	39	15	132	36	26	88	266	45	M8	190	23





Diaphragm valve DIASTAR Ten PVC-U
FO (Fail safe to open)
Unions with solvent cement sockets JIS

Model:

- Double flow rate compared to predecessor
- One housing nut replaces four screws
- Rotating air connection at 90° intervals
- For easy installation and removal
- Short overall length

Option:

- Individual configuration of the valve (see diagram)
- Comprehensive range of accessories available
- PN16 available as a configuration

* PN: PTFE
Working Pressure: **one side**

Size (inch)	DN (mm)	PN* (bar)	kv-value (Δp=1 bar) (l/min)	EPDM Code	Weight (kg)	PTFE/EPDM Code	Weight (kg)
½	15	10/10*	125	**161 644 812**	0.957	**161 644 832**	0.968
¾	20	10/10*	271	**161 644 813**	0.947	**161 644 833**	0.958
1	25	10/10*	481	**161 644 814**	1.169	**161 644 834**	1.189
1 ¼	32	10/10*	759	**161 644 815**	1.866	**161 644 835**	1.886
1 ½	40	10/10*	1263	**161 644 816**	3.756	**161 644 836**	3.786
2	50	10/10*	1728	**161 644 817**	4.633	**161 644 837**	4.661

Size (inch)	D (mm)	D1_G (inch)	H (mm)	H1 (mm)	H2 (mm)	H3 (mm)	H4 (mm)	H5 (mm)	H7 (mm)	L (mm)	L2 (mm)	M	z (mm)	Lift = Hx (mm)
½	96	⅛	132	18	12	73	25	16	57	152	25	M6	120	10
¾	96	⅛	132	18	12	73	25	16	57	152	25	M6	114	10
1	96	⅛	143	22	12	84	25	16	57	166	25	M6	122	13
1 ¼	120	⅛	173	26	15	99	26	26	69	192	45	M8	140	15
1 ½	150	¼	214	32	15	119	36	26	88	222	45	M8	160	19
2	150	¼	226	39	15	132	36	26	88	266	45	M8	190	23





Diaphragm valve DIASTAR Ten PVC-U
FO (Fail safe to open)
Unions with threaded sockets Rc

Model:

- Double flow rate compared to predecessor
- One housing nut replaces four screws
- Rotating air connection at 90° intervals
- For easy installation and removal
- Short overall length

Option:

- Individual configuration of the valve (see diagram)
- Comprehensive range of accessories available
- PN16 available as a configuration

* PN: PTFE

Working Pressure: **one side**

Rc (inch)	DN (mm)	PN* (bar)	kv-value (Δp=1 bar) (l/min)	EPDM Code	Weight (kg)	PTFE/EPDM Code	Weight (kg)
½	15	10/10*	125	**161 644 912**	0.957	**161 644 932**	0.968
¾	20	10/10*	271	**161 644 913**	0.948	**161 644 933**	0.960
1	25	10/10*	481	**161 644 914**	1.171	**161 644 934**	1.191
1 ¼	32	10/10*	759	**161 644 915**	1.862	**161 644 935**	1.882
1 ½	40	10/10*	1263	**161 644 916**	3.754	**161 644 936**	3.784
2	50	10/10*	1728	**161 644 917**	4.705	**161 644 937**	4.733

Rc (inch)	D (mm)	D1_G (inch)	H (mm)	H1 (mm)	H2 (mm)	H3 (mm)	H4 (mm)	H5 (mm)	H7 (mm)	L (mm)	L2 (mm)	M	z (mm)	Lift = Hx (mm)
½	96	⅛	132	18	12	73	25	16	57	152	25	M6	120	10
¾	96	⅛	132	18	12	73	25	16	57	152	25	M6	114	10
1	96	⅛	143	22	12	84	25	16	57	166	25	M6	122	13
1 ¼	120	⅛	173	26	15	99	26	26	69	192	45	M8	140	15
1 ½	150	¼	214	32	15	119	36	26	69	222	45	M8	160	19
2	150	¼	226	39	15	132	36	26	69	266	45	M8	190	23



Diaphragm valve DIASTAR Ten PVC-U
FO (Fail safe to open)
With fixed flanges PVC-U JIS

Model:

- Double flow rate compared to predecessor
- One housing nut replaces four screws
- Rotating air connection at 90° intervals
- Joining faces flat/serrated
- Connecting dimension: JIS B2238/39 10K

Option:

- Individual configuration of the valve (see diagram)
- Comprehensive range of accessories available

* PN: PTFE
Working Pressure: **one side**



Size (inch)	DN (mm)	PN* (bar)	kv-value (Δp=1 bar) (l/min)	EPDM Code	Weight (kg)	PTFE/EPDM Code	Weight (kg)
½	15	10/10*	125	**161 647 912**	0.672	**161 647 932**	0.682
¾	20	10/10*	271	**161 647 913**	1.046	**161 647 933**	1.057
1	25	10/10*	481	**161 647 914**	1.340	**161 647 934**	1.360
1 ¼	32	10/10*	759	**161 647 915**	2.174	**161 647 935**	2.194
1 ½	40	10/10*	1263	**161 647 916**	4.012	**161 647 936**	4.042
2	50	10/10*	1728	**161 647 917**	4.860	**161 647 937**	4.888

Size (inch)	D (mm)	D1_G (inch)	D3 (mm)	D4 (mm)	D5 (mm)	H (mm)	H1 (mm)	H2 (mm)	H3 (mm)	H4 (mm)	H5 (mm)	H7 (mm)	L (mm)	L2 (mm)	M
½	68	⅛	95	70	15	101	14	12	60	24	16	43	110	25	M6
¾	96	⅛	100	75	15	132	18	12	73	25	16	57	120	25	M6
1	96	⅛	125	90	19	143	22	12	84	25	16	57	130	25	M6
1 ¼	120	⅛	135	100	19	173	26	15	99	26	26	69	180	45	M8
1 ½	150	¼	140	105	19	214	32	15	119	36	26	88	180	45	M8
2	150	¼	155	120	19	226	39	15	132	36	26	88	210	45	M8

Size (inch)	Lift = Hx (mm)
½	7
¾	10
1	13
1 ¼	15
1 ½	19
2	23





Diaphragm valve DIASTAR Ten PVC-U
DA (Double acting)
Unions with solvent cement sockets BS

Model:

- Double flow rate compared to predecessor
- One housing nut replaces four screws
- Rotating air connection at 90° intervals
- For easy installation and removal
- Short overall length

Option:

- Individual configuration of the valve (see diagram)
- Comprehensive range of accessories available
- PN16 available as a configuration

* PN: PTFE

Working Pressure: **one side**

Size (inch)	DN (mm)	PN* (bar)	kv-value (Δp=1 bar) (l/min)	EPDM Code	Weight (kg)	PTFE/EPDM Code	Weight (kg)
½	15	10/10*	125	**161 654 512**	0.508	**161 654 532**	0.534
¾	20	10/10*	271	**161 654 513**	0.909	**161 654 533**	0.920
1	25	10/10*	481	**161 654 514**	1.135	**161 654 534**	1.155
1 ¼	32	10/10*	759	**161 654 515**	1.788	**161 654 535**	1.808
1 ½	40	10/10*	1263	**161 654 516**	2.976	**161 654 536**	3.006
2	50	10/10*	1728	**161 654 517**	4.762	**161 654 537**	3.895

Size (inch)	D (mm)	D1_G (inch)	H (mm)	H1 (mm)	H2 (mm)	H3 (mm)	H4 (mm)	H5 (mm)	H7 (mm)	L (mm)	L2 (mm)	M	z (mm)	Lift = Hx (mm)
½	68	⅛	101	14	12	60	24	16	43	128	25	M6	96	7
¾	96	⅛	132	18	12	73	25	16	57	152	25	M6	114	10
1	96	⅛	143	22	12	84	25	16	57	166	25	M6	122	13
1 ¼	120	⅛	173	26	15	99	26	26	69	192	45	M8	140	15
1 ½	150	¼	214	32	15	119	36	26	88	222	45	M8	160	19
2	150	¼	226	39	15	132	36	26	88	266	45	M8	190	23





Diaphragm valve DIASTAR Ten PVC-U
DA (Double acting)
Unions with solvent cement sockets JIS

Model:

- Double flow rate compared to predecessor
- One housing nut replaces four screws
- Rotating air connection at 90° intervals
- For easy installation and removal
- Short overall length

Option:

- Individual configuration of the valve (see diagram)
- Comprehensive range of accessories available
- PN16 available as a configuration

* PN: PTFE
Working Pressure: **one side**

Size (inch)	DN (mm)	PN* (bar)	kv-value (Δp=1 bar) (l/min)	EPDM Code	Weight (kg)	PTFE/EPDM Code	Weight (kg)
½	15	10/10*	125	**161 654 812**	0.921	**161 654 832**	0.932
¾	20	10/10*	271	**161 654 813**	0.911	**161 654 833**	0.922
1	25	10/10*	481	**161 654 814**	1.139	**161 654 834**	1.159
1 ¼	32	10/10*	759	**161 654 815**	1.806	**161 654 835**	1.826
1 ½	40	10/10*	1263	**161 654 816**	3.006	**161 654 836**	3.036
2	50	10/10*	1728	**161 654 817**	3.883	**161 654 837**	3.911

Size (inch)	D (mm)	D1_G (inch)	H (mm)	H1 (mm)	H2 (mm)	H3 (mm)	H4 (mm)	H5 (mm)	H7 (mm)	L (mm)	L2 (mm)	M	z (mm)	Lift = Hx (mm)
½	96	⅛	132	18	12	73	25	16	57	152	25	M6	120	10
¾	96	⅛	132	18	12	73	25	16	57	152	25	M6	114	10
1	96	⅛	143	22	12	84	25	16	57	166	25	M6	122	13
1 ¼	120	⅛	173	26	15	99	26	26	69	192	45	M8	140	15
1 ½	150	¼	214	32	15	119	36	26	88	222	45	M8	160	19
2	150	¼	226	39	15	132	36	26	88	266	45	M8	190	23





Diaphragm valve DIASTAR Ten PVC-U
DA (Double acting)
Unions with threaded sockets Rc

Model:

- Double flow rate compared to predecessor
- One housing nut replaces four screws
- Rotating air connection at 90° intervals
- For easy installation and removal
- Short overall length

Option:

- Individual configuration of the valve (see diagram)
- Comprehensive range of accessories available
- PN16 available as a configuration

* PN: PTFE

Working Pressure: **one side**

Rc (inch)	DN (mm)	PN* (bar)	kv-value (Δp=1 bar) (l/min)	EPDM Code	Weight (kg)	PTFE/EPDM Code	Weight (kg)
½	15	10/10*	125	**161 654 912**	0.921	**161 654 932**	0.932
¾	20	10/10*	271	**161 654 913**	0.912	**161 654 933**	0.924
1	25	10/10*	481	**161 654 914**	1.141	**161 654 934**	1.161
1 ¼	32	10/10*	759	**161 654 915**	1.802	**161 654 935**	1.822
1 ½	40	10/10*	1263	**161 654 916**	3.004	**161 654 936**	3.034
2	50	10/10*	1728	**161 654 917**	3.955	**161 654 937**	3.983

Rc (inch)	D (mm)	D1_G (inch)	H (mm)	H1 (mm)	H2 (mm)	H3 (mm)	H4 (mm)	H5 (mm)	H7 (mm)	L (mm)	L2 (mm)	M	z (mm)	Lift = Hx (mm)
½	96	⅛	132	18	12	73	25	16	57	152	25	M6	120	10
¾	96	⅛	132	18	12	73	25	16	57	152	25	M6	114	10
1	96	⅛	143	22	12	84	25	16	57	166	25	M6	122	13
1 ¼	120	⅛	173	26	15	99	26	26	69	192	45	M8	140	15
1 ½	150	¼	214	32	15	119	36	26	69	222	45	M8	160	19
2	150	¼	226	39	15	132	36	26	69	266	45	M8	190	23



Diaphragm valve DIASTAR Ten PVC-U
DA (Double acting)
With fixed flanges PVC-U JIS

Model:

- Double flow rate compared to predecessor
- One housing nut replaces four screws
- Rotating air connection at 90° intervals
- Joining faces flat/serrated
- Connecting dimension: JIS B2238/39 10K

Option:

- Individual configuration of the valve (see diagram)
- Comprehensive range of accessories available

* PN: PTFE
Working Pressure: **one side**



Size (inch)	DN (mm)	PN* (bar)	kv-value (Δp=1 bar) (l/min)	EPDM Code	Weight (kg)	PTFE/EPDM Code	Weight (kg)
½	15	10/10*	125	**161 657 912**	0.656	**161 657 932**	0.666
¾	20	10/10*	271	**161 657 913**	1.010	**161 657 933**	1.021
1	25	10/10*	481	**161 657 914**	1.310	**161 657 934**	1.330
1 ¼	32	10/10*	759	**161 657 915**	2.114	**161 657 935**	2.134
1 ½	40	10/10*	1263	**161 657 916**	3.262	**161 657 936**	3.292
2	50	10/10*	1728	**161 657 917**	4.110	**161 657 937**	4.138

Size (inch)	D (mm)	D1_G (inch)	D3 (mm)	D4 (mm)	D5 (mm)	H (mm)	H1 (mm)	H2 (mm)	H3 (mm)	H4 (mm)	H5 (mm)	H7 (mm)	L (mm)	L2 (mm)	M
½	68	⅛	95	70	15	101	14	12	60	24	16	43	110	25	M6
¾	96	⅛	100	75	15	132	18	12	73	25	16	57	120	25	M6
1	96	⅛	125	90	19	143	22	12	84	25	16	57	130	25	M6
1 ¼	120	⅛	135	100	19	173	26	15	99	26	26	69	180	45	M8
1 ½	150	¼	140	105	19	214	32	15	119	36	26	88	180	45	M8
2	150	¼	155	120	19	226	39	15	132	36	26	88	210	45	M8

Size (inch)	Lift = Hx (mm)
½	7
¾	10
1	13
1 ¼	15
1 ½	19
2	23

DIASTAR TenPlus





Diaphragm valve DIASTAR TenPlus PVC-U
FC (Fail safe to close)
Unions with solvent cement sockets BS

Model:

- Double flow rate compared to predecessor
- One housing nut replaces four screws
- Rotating air connection at 90° intervals
- For easy installation and removal
- Short overall length

Option:

- Individual configuration of the valve (see diagram)
- Comprehensive range of accessories available
- PN16 available as a configuration

* PN: PTFE
Working Pressure: **both sides**

Size (inch)	DN (mm)	PN (psi)	PN* (bar)	kv-value (Δp=1 bar) (l/min)	EPDM Code	Weight (kg)	PTFE/EPDM Code	Weight (kg)
½	15	150/150*	10/10*	125	**161 684 512**	0.990	**161 684 532**	1.000
¾	20	150/150*	10/10*	271	**161 684 513**	1.119	**161 684 533**	1.130
1	25	150/150*	10/10*	481	**161 684 514**	2.040	**161 684 534**	1.959
1 ¼	32	150/150*	10/10*	759	**161 684 515**	3.278	**161 684 535**	3.298
1 ½	40	150/150*	10/10*	1263	**161 684 516**	5.224	**161 684 536**	5.254
2	50	150/150*	10/10*	1728	**161 684 517**	6.326	**161 684 537**	6.142

Size (inch)	D (mm)	D1_G (inch)	H (mm)	H1 (mm)	H2 (mm)	H3 (mm)	H4 (mm)	H5 (mm)	H7 (mm)	L (mm)	L2 (mm)	M	z (mm)	Lift = Hx (mm)
½	96	⅛	127	14	12	68	25	16	57	128	25	M6	96	7
¾	96	⅛	132	18	12	73	25	16	57	152	25	M6	114	10
1	120	⅛	167	22	12	93	26	26	69	166	25	M6	122	13
1 ¼	150	¼	196	26	15	101	36	26	88	192	45	M8	140	15
1 ½	180	¼	239	32	15	124	37	26	103	222	45	M8	160	19
2	180	¼	251	39	15	137	37	26	103	266	45	M8	190	23





Diaphragm valve DIASTAR TenPlus PVC-U
FC (Fail safe to close) low pressure
Unions with solvent cement sockets JIS

Model:

- Double flow rate compared to predecessor
- One housing nut replaces four screws
- Rotating air connection at 90° intervals
- For easy installation and removal
- Short overall length

Option:

- Individual configuration of the valve (see diagram)
- Comprehensive range of accessories available
- PN16 available as a configuration

* PN: PTFE
Working Pressure: **both sides**

Size (inch)	DN (mm)	PN* (bar)	kv-value (Δp=1 bar) (l/min)	EPDM Code	Weight (kg)	PTFE/EPDM Code	Weight (kg)
½	15	10/8*	125	**161 684 812**	1.135	**161 684 832**	1.142
¾	20	10/8*	271	**161 684 813**	1.121	**161 684 833**	1.132
1	25	10/8*	481	**161 684 814**	1.943	**161 684 834**	1.963
1 ¼	32	10/8*	759	**161 684 815**	3.296	**161 684 835**	3.316
1 ½	40	10/8*	1263	**161 684 816**	6.336	**161 684 836**	5.284
2	50	10/6*	1728	**161 684 817**	6.130	**161 684 837**	6.158

Size (inch)	D (mm)	D1_G (inch)	H (mm)	H1 (mm)	H2 (mm)	H3 (mm)	H4 (mm)	H5 (mm)	H7 (mm)	L (mm)	L2 (mm)	M	z (mm)	Lift = Hx (mm)
½	96	⅛	132	18	12	73	25	16	57	152	25	M6	120	10
¾	96	⅛	132	18	12	73	25	16	57	152	25	M6	114	10
1	120	⅛	167	22	12	93	26	26	69	166	25	M6	122	13
1 ¼	150	¼	196	26	15	101	36	26	88	192	45	M8	140	15
1 ½	180	¼	239	32	15	124	37	26	103	222	45	M8	160	19
2	180	¼	251	39	15	137	37	26	103	266	45	M8	190	23





Diaphragm valve DIASTAR TenPlus PVC-U
FC (Fail safe to close) low pressure
Unions with threaded sockets Rc

Model:

- Double flow rate compared to predecessor
- One housing nut replaces four screws
- Rotating air connection at 90° intervals
- For easy installation and removal
- Short overall length

Option:

- Individual configuration of the valve (see diagram)
- Comprehensive range of accessories available
- PN16 available as a configuration

* PN: PTFE

Working Pressure: **both sides**

Rc (inch)	DN (mm)	PN* (bar)	kv-value (Δp=1 bar) (l/min)	EPDM Code	Weight (kg)	PTFE/EPDM Code	Weight (kg)
½	15	10/8*	125	**161 684 912**	1.131	**161 684 932**	1.142
¾	20	10/8*	271	**161 684 913**	1.123	**161 684 933**	1.134
1	25	10/8*	481	**161 684 914**	1.945	**161 684 934**	1.965
1 ¼	32	10/8*	759	**161 684 915**	3.292	**161 684 935**	3.312
1 ½	40	10/8*	1263	**161 684 916**	5.252	**161 684 936**	5.282
2	50	10/6*	1728	**161 684 917**	6.202	**161 684 937**	6.230

Rc (inch)	D (mm)	D1_G (inch)	H (mm)	H1 (mm)	H2 (mm)	H3 (mm)	H4 (mm)	H5 (mm)	H7 (mm)	L (mm)	L2 (mm)	M	z (mm)	Lift = Hx (mm)
½	96	⅛	132	18	12	73	25	16	57	152	25	M6	120	10
¾	96	⅛	132	18	12	73	25	16	57	152	25	M6	114	10
1	120	⅛	167	22	12	93	26	26	69	166	25	M6	122	13
1 ¼	150	¼	196	26	15	101	36	26	88	192	45	M8	140	15
1 ½	180	¼	239	32	15	124	37	26	103	222	45	M8	160	19
2	180	¼	251	39	15	137	37	26	103	266	45	M8	190	23



Diaphragm valve DIASTAR TenPlus PVC-U
FC (Fail safe to close) low pressure
With fixed flanges PVC-U JIS

Model:

- Double flow rate compared to predecessor
- One housing nut replaces four screws
- Rotating air connection at 90° intervals
- Joining faces flat/serrated
- Connecting dimension: JIS B2238/39 10K

Option:

- Individual configuration of the valve (see diagram)
- Comprehensive range of accessories available

* PN: PTFE
Working Pressure: **both sides**



Size (inch)	DN (mm)	PN* (bar)	kv-value (Δp=1 bar) (l/min)	EPDM Code	Weight (kg)	PTFE/EPDM Code	Weight (kg)
½	15	10/8*	125	**161 687 912**	1.122	**161 687 932**	1.132
¾	20	10/8*	271	**161 687 913**	1.220	**161 687 933**	1.231
1	25	10/8*	481	**161 687 914**	2.114	**161 687 934**	2.134
1 ¼	32	10/8*	759	**161 687 915**	3.604	**161 687 935**	3.624
1 ½	40	10/8*	1263	**161 687 916**	5.510	**161 687 936**	5.540
2	50	10/6*	1728	**161 687 917**	6.357	**161 687 937**	6.385

Size (inch)	D (mm)	D1_G (inch)	D3 (mm)	D4 (mm)	D5 (mm)	H (mm)	H1 (mm)	H2 (mm)	H3 (mm)	H4 (mm)	H5 (mm)	H7 (mm)	L (mm)	L2 (mm)	M
½	96	⅛	95	70	15	127	14	12	68	25	16	57	110	25	M6
¾	96	⅛	100	75	15	132	18	12	73	25	16	57	120	25	M6
1	120	⅛	125	90	19	167	22	12	93	26	26	69	130	25	M6
1 ¼	150	¼	135	100	19	196	26	15	101	36	26	88	180	45	M8
1 ½	180	¼	140	105	19	239	32	15	124	37	26	103	180	45	M8
2	180	¼	155	120	19	251	39	15	137	37	26	103	210	45	M8

Size (inch)	Lift = Hx (mm)
½	7
¾	10
1	13
1 ¼	15
1 ½	19
2	23

Pressure regulating valves

Pressure reducing valve type 582



Pressure reducing valve type 582 PVC-U
Unions with solvent cement sockets Inch BS
With manometer

Model:

- Diaphragm PTFE/EPDM
- Integrated stainless steel mounting inserts
- 0.5-9.0 bar (7-130 psi)
- Attention: Manometer with brass connection in direct contact with medium. Check for chemical resistance, otherwise chose the optional manometer adapter for media separation.

0.3-3.0 bar (4-44 psi) on request

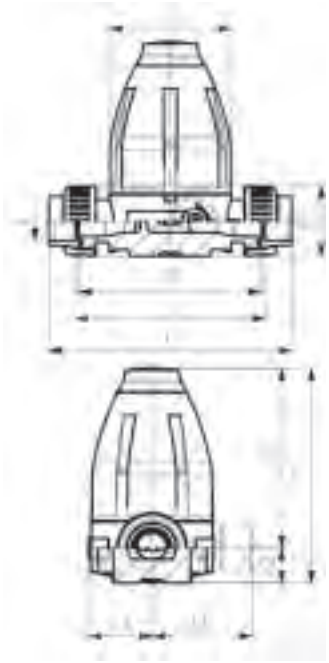

DN (mm)	PN (bar)	O-rings EPDM Code	Weight (kg)	O-rings FPM Code
15	10	**161 582 322**	0.730	**161 582 332**
20	10	**161 582 323**	1.520	**161 582 333**
25	10	**161 582 324**	1.550	**161 582 334**
32	10	**161 582 325**	4.100	**161 582 335**
40	10	**161 582 326**	4.270	**161 582 336**
50	10	**161 582 327**	4.500	**161 582 337**

D (mm)	D1 (mm)	H (mm)	H1 (mm)	H2 (mm)	H3 (mm)	L (mm)	L2 (mm)	L3 (mm)	L4 (mm)	L5 (mm)	M	z (mm)	Inch (inch)
79	43	132	111	21	12	161	120	42	77	40	M6	126	1/2
100	51	177	148	29	14	198	150	53	88	46	M6	156	3/4
100	58	177	148	29	14	204	150	53	88	46	M6	156	1
147	72	251	207	44	21	266	205	76	111	65	M8	211	1 1/4
147	83	251	207	44	21	273	205	76	111	65	M8	211	1 1/2
147	101	251	207	44	21	285	205	76	111	65	M8	211	2



Pressure reducing valve type 582 PVC-U
Unions with solvent cement sockets JIS
With manometer

Model:

- Diaphragm PTFE/EPDM
- Integrated stainless steel mounting inserts
- 0.5-9.0 bar (7-130 psi)
- Attention: Manometer with brass connection in direct contact with medium. Check for chemical resistance, otherwise chose the optional manometer adapter for media separation.

0.3-3.0 bar (4-44 psi) on request

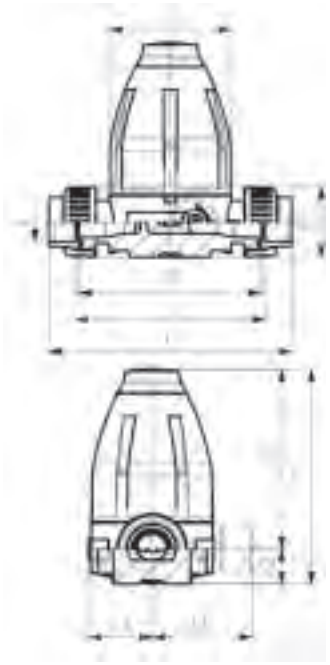

DN (mm)	PN (bar)	O-rings EPDM Code	Weight (kg)	O-rings FPM Code
15	10	**161 582 422**	1.520	**161 582 432**
20	10	**161 582 423**	1.520	**161 582 433**
25	10	**161 582 424**	1.550	**161 582 434**
32	10	**161 582 425**	4.100	**161 582 435**
40	10	**161 582 426**	4.270	**161 582 436**
50	10	**161 582 427**	4.500	**161 582 437**

D (mm)	D1 (mm)	H (mm)	H1 (mm)	H2 (mm)	H3 (mm)	L (mm)	L2 (mm)	L3 (mm)	L4 (mm)	L5 (mm)	M	z (mm)	Inch (inch)
100	51	177	148	29	14	194	150	53	88	46	M6	156	1/2
100	51	177	148	29	14	194	150	53	88	46	M6	156	3/4
100	58	177	148	29	14	200	150	53	88	46	M6	156	1
147	72	251	207	44	21	263	205	76	111	65	M8	211	1 1/4
147	83	251	207	44	21	273	205	76	111	65	M8	211	1 1/2
147	101	251	207	44	21	287	205	76	111	65	M8	211	2



Pressure reducing valve type 582 PVC-U
Unions with solvent cement sockets Inch BS
Without manometer

Model:

- Diaphragm PTFE/EPDM
- Integrated stainless steel mounting inserts
- 0.5-9.0 bar (7-130 psi)

0.3-3.0 bar (4-44 psi) on request
Manometer on request

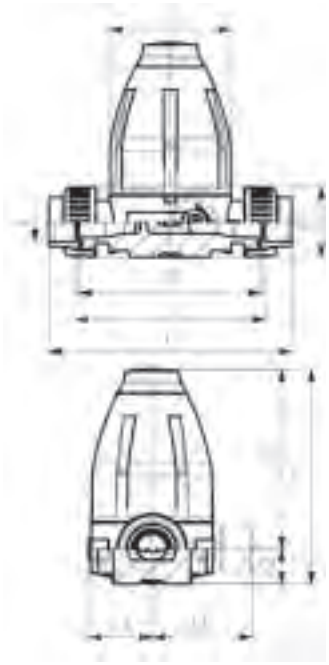

DN (mm)	PN (bar)	O-rings EPDM Code	Weight (kg)	O-rings FPM Code
15	10	**161 582 302**	0.700	**161 582 312**
20	10	**161 582 303**	1.490	**161 582 313**
25	10	**161 582 304**	1.520	**161 582 314**
32	10	**161 582 305**	4.070	**161 582 315**
40	10	**161 582 306**	4.240	**161 582 316**
50	10	**161 582 307**	4.470	**161 582 317**

D (mm)	D1 (mm)	H (mm)	H1 (mm)	H2 (mm)	H3 (mm)	L (mm)	L2 (mm)	L3 (mm)	L5 (mm)	M	z (mm)	Inch (inch)
79	43	132	111	21	12	161	120	42	40	M6	126	1/2
100	51	177	148	29	14	198	150	53	46	M6	156	3/4
100	58	177	148	29	14	204	150	53	46	M6	156	1
147	72	251	207	44	21	266	205	76	65	M8	211	1 1/4
147	83	251	207	44	21	273	205	76	65	M8	211	1 1/2
147	101	251	207	44	21	285	205	76	65	M8	211	2



Pressure reducing valve type 582 PVC-U
Unions with solvent cement sockets JIS
Without manometer

Model:

- Diaphragm PTFE/EPDM
- Integrated stainless steel mounting inserts
- 0.5-9.0 bar (7-130 psi)

0.3-3.0 bar (4-44 psi) on request
Manometer on request

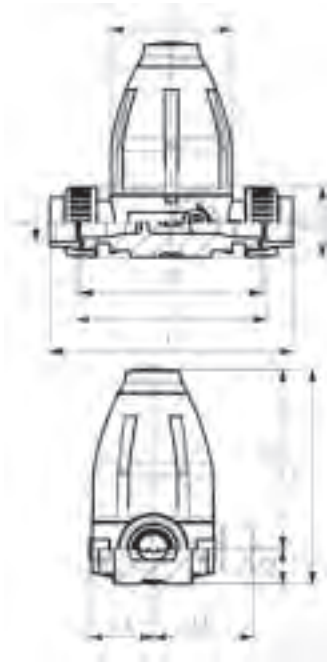

DN (mm)	PN (bar)	O-rings EPDM Code	Weight (kg)	O-rings FPM Code
15	10	**161 582 402**	1.490	**161 582 412**
20	10	**161 582 403**	1.490	**161 582 413**
25	10	**161 582 404**	1.520	**161 582 414**
32	10	**161 582 405**	4.070	**161 582 415**
40	10	**161 582 406**	4.240	**161 582 416**
50	10	**161 582 407**	4.470	**161 582 417**

D (mm)	D1 (mm)	H (mm)	H1 (mm)	H2 (mm)	H3 (mm)	L (mm)	L2 (mm)	L3 (mm)	L5 (mm)	M	z (mm)	Inch (inch)
100	51	177	148	29	14	194	150	53	46	M6	156	1/2
100	51	177	148	29	14	194	150	53	46	M6	156	3/4
100	58	177	148	29	14	200	150	53	46	M6	156	1
147	72	251	207	44	21	263	205	76	65	M8	211	1 1/4
147	83	251	207	44	21	273	205	76	65	M8	211	1 1/2
147	101	251	207	44	21	287	205	76	65	M8	211	2

Pressure retaining valve type 586



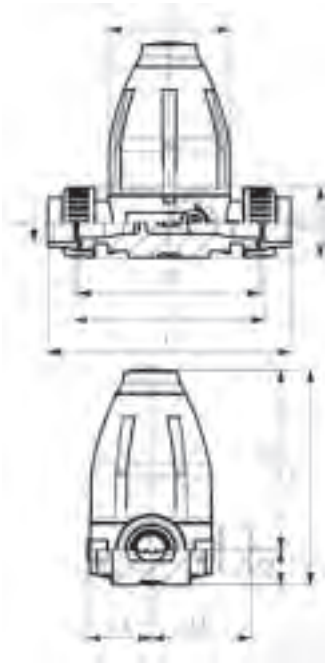

Pressure retaining valve type 586 PVC-U
Unions with solvent cement sockets Inch BS
Without manometer

Model:

- Diaphragm PTFE/EPDM
- Integrated stainless steel mounting inserts
- 0.5-9.0 bar (7-130 psi)

0.3-3.0 bar (4-44 psi) on request
Manometer on request

DN (mm)	PN (bar)	O-rings EPDM Code	Weight (kg)	O-rings FPM Code
15	10	**161 586 302**	0.690	**161 586 312**
20	10	**161 586 303**	1.510	**161 586 313**
25	10	**161 586 304**	1.540	**161 586 314**
32	10	**161 586 305**	4.200	**161 586 315**
40	10	**161 586 306**	4.260	**161 586 316**
50	10	**161 586 307**	4.500	**161 586 317**

D (mm)	D1 (mm)	H (mm)	H1 (mm)	H2 (mm)	H3 (mm)	L (mm)	L2 (mm)	L3 (mm)	L5 (mm)	M	z (mm)	Inch (inch)
79	43	132	111	21	12	161	120	42	40	M6	126	1/2
100	51	177	148	29	14	198	150	53	46	M6	156	3/4
100	58	177	148	29	14	204	150	53	46	M6	156	1
147	72	251	207	44	21	266	205	76	65	M8	211	1 1/4
147	83	251	207	44	21	273	205	76	65	M8	211	1 1/2
147	101	251	207	44	21	285	205	76	65	M8	211	2



Pressure retaining valve type 586 PVC-U
Unions with solvent cement sockets JIS
Without manometer

Model:

- Diaphragm PTFE/EPDM
- Integrated stainless steel mounting inserts
- 0.5-9.0 bar (7-130 psi)

0.3-3.0 bar (4-44 psi) on request
Manometer on request

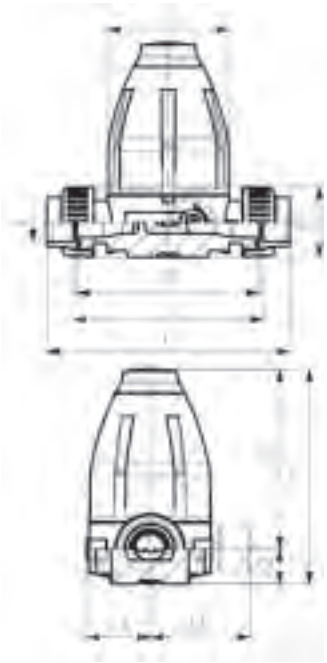

DN (mm)	PN (bar)	O-rings EPDM Code	Weight (kg)	O-rings FPM Code
15	10	**161 586 402**	1.510	**161 586 412**
20	10	**161 586 403**	1.510	**161 586 413**
25	10	**161 586 404**	1.540	**161 586 414**
32	10	**161 586 405**	4.200	**161 586 415**
40	10	**161 586 406**	4.260	**161 586 416**
50	10	**161 586 407**	4.500	**161 586 417**

D (mm)	D1 (mm)	H (mm)	H1 (mm)	H2 (mm)	H3 (mm)	L (mm)	L2 (mm)	L3 (mm)	L5 (mm)	M	z (mm)	Inch (inch)
100	51	177	148	29	14	194	150	53	46	M6	156	1/2
100	51	177	148	29	14	194	150	53	46	M6	156	3/4
100	58	177	148	29	14	200	150	53	46	M6	156	1
147	72	251	207	44	21	263	205	76	65	M8	211	1 1/4
147	83	251	207	44	21	273	205	76	65	M8	211	1 1/2
147	101	251	207	44	21	287	205	76	65	M8	211	2

Process control valves



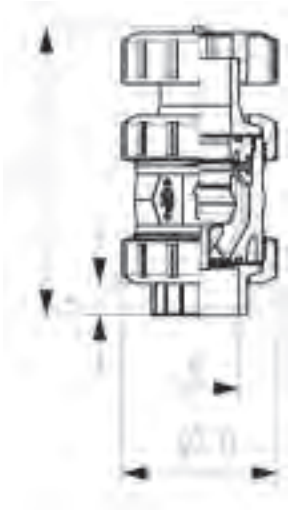

Ventilating and bleed valve
Type 591 PVC-U
With solvent cement sockets Inch BS

Model:

- With protection cap up to DN50 made of PP-GF, DN65-100 made of POM
- Floater made of PP-H
- Designed for easy installation and removal
- Compact installation length

d (mm)	Size (inch)	DN (mm)	PN (bar)	EPDM Code	FPM Code	D (mm)	L (mm)	t (mm)	closest inch (inch)
	⅜	10	16	**161 591 061**	**161 591 071**	50	118	16	
	½	15	16	**161 591 062**	**161 591 072**	50	124	18	
	¾	20	16	**161 591 063**	**161 591 073**	58	142	21	
	1	25	16	**161 591 064**	**161 591 074**	68	157	24	
	1 ¼	32	16	**161 591 065**	**161 591 075**	84	179	29	
	1 ½	40	16	**161 591 066**	**161 591 076**	97	197	30	
	2	50	16	**161 591 067**	**161 591 077**	124	229	36	
75		65	16	**161 591 008**	**161 591 018**	166	258	45	2 ½
	3	80	16	**161 591 069**	**161 591 079**	200	277	51	
	4	100	16	**161 591 070**	**161 591 080**	238	320	64	



Ventilating and bleed valve
Type 591 PVC-U
With BSP brass thread

Model:

- With protection cap up to DN50 made of PP-GF, DN65-100 made of POM
- Floater made of PP-H
- Designed for easy installation and removal
- Compact installation length

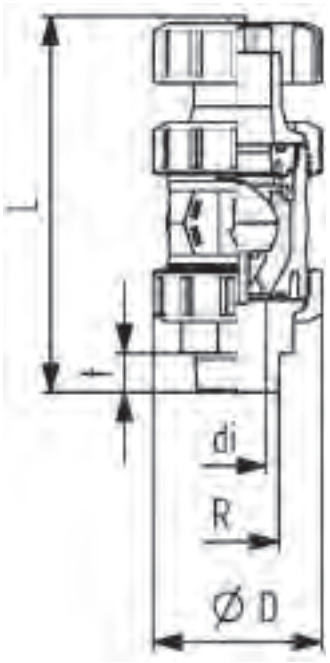

d (mm)	DN (mm)	PN (bar)	EPDM Code	FPM Code	di (mm)	D (mm)	L (mm)	t (mm)	R (inch)
16	10	16	**161 591 139**	**161 591 149**	10	50	135	13.0	⅜
20	15	16	**161 591 140**	**161 591 150**	13	50	140	14.0	½
25	20	16	**161 591 141**	**161 591 151**	16	58	156	16.5	¾
32	25	16	**161 591 142**	**161 591 152**	20	68	172	19.0	1
40	32	16	**161 591 143**	**161 591 153**	26	84	195	21.5	1 ¼
50	40	16	**161 591 144**	**161 591 154**	33	97	216	22.5	1 ½
63	50	16	**161 591 145**	**161 591 155**	40	124	252	27.0	2
75	65	16	**161 591 146**	**161 591 156**	58	166	292	38.2	2 ½
90	80	16	**161 591 147**	**161 159 157**	70	200	311	41.3	3
110	100	16	**161 591 148**	**161 159 158**	95	238	354	47.3	4



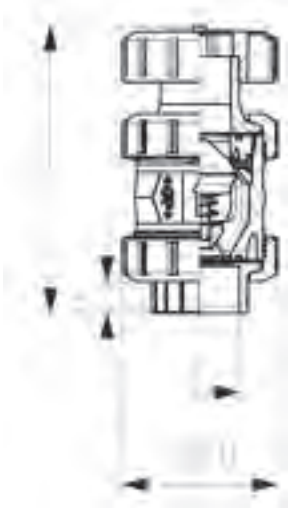

Ventilating valve type 595 PVC-U
With solvent cement sockets Inch BS

Model:

- With protection cap up to DN50 made of PP-GF, DN65-100 made of POM
- Spring HALAR coated
- Spring available in other materials, see spare parts
- Designed for easy installation and removal
- Compact installation length

d (mm)	Size (inch)	DN (mm)	PN (bar)	EPDM Code	FPM Code	D (mm)	L (mm)	t (mm)	closest inch (inch)
	⅜	10	16	**161 595 061**	**161 595 071**	50	118	16	
	½	15	16	**161 595 062**	**161 595 072**	50	124	18	
	¾	20	16	**161 595 063**	**161 595 073**	58	142	21	
	1	25	16	**161 595 064**	**161 595 074**	68	157	24	
	1 ¼	32	16	**161 595 065**	**161 595 075**	84	179	29	
	1 ½	40	16	**161 595 066**	**161 595 076**	97	197	30	
	2	50	16	**161 595 067**	**161 595 077**	124	229	36	
75		65	16	**161 595 008**	**161 595 018**	166	258	45	2 ½
	3	80	16	**161 595 069**	**161 595 079**	200	277	51	
	4	100	16	**161 595 070**	**161 595 080**	238	320	64	

Cone check valves



Check valve type 561 PVC-U
With solvent cement sockets Inch BS

Model:

- Sealing at a minimum water column of 2 m
- Designed for easy installation and removal
- Vibration free even at high flow velocity
- Flow-optimized return cone, double guided
- For vertical installation
- Compact installation length, same as ball valve type 546
- Z-length, end connectors and union nuts **not** compatible with type 360
- New DN65-DN100

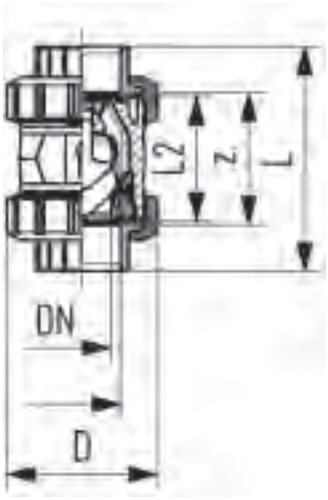

d (mm)	Size (inch)	DN (mm)	PN (bar)	kv-value (Δp=1 bar) (l/min)	EPDM Code	Weight (kg)	FPM Code	Weight (kg)
	⅜	10	16	190	**161 561 061**	0.120	**161 561 071**	0.120
	½	15	16	180	**161 561 062**	0.120	**161 561 072**	0.120
	¾	20	16	380	**161 561 063**	0.250	**161 561 073**	0.270
	1	25	16	460	**161 561 064**	0.276	**161 561 074**	0.280
	1 ¼	32	16	850	**161 561 065**	0.490	**161 561 075**	0.490
	1 ½	40	16	1080	**161 561 066**	0.760	**161 561 076**	0.770
	2	50	16	1670	**161 561 067**	1.374	**161 561 077**	1.370
75		65	16	2950	**161 561 008**	3.160	**161 561 018**	3.170
	3	80	16	3600	**161 561 069**	5.070	**161 561 079**	5.090
	4	100	16	4150	**161 561 070**	8.010	**161 561 080**	8.050

D (mm)	L (mm)	L2 (mm)	z (mm)	closest inch (inch)
50	92	56	60	
50	95	56	60	
58	110	65	69	
68	123	71	75	
84	146	85	89	
97	157	89	97	
124	183	101	110	
166	233	136	144	2 ½
200	254	141	151	
238	301	164	174	



Check valve type 561 PVC-U
With solvent cement sockets JIS

Model:

- Sealing at a minimum water column of 2 m
- Designed for easy installation and removal
- Vibration free even at high flow velocity
- Flow-optimized return cone, double guided
- For vertical installation
- Compact installation length, same as ball valve type 546
- Z-length, end connectors and union nuts **not** compatible with type 360
- New DN65-DN100

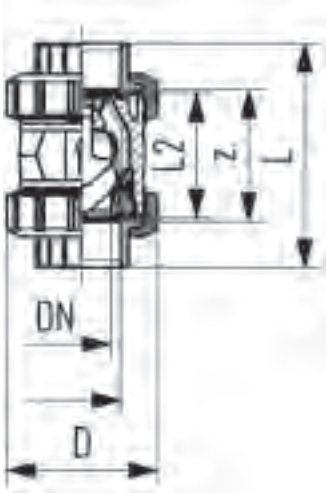

Size (inch)	DN (mm)	PN (bar)	kv-value (Δp=1 bar) (l/min)	EPDM Code	Weight (kg)	D (mm)	L (mm)	L2 (mm)	z (mm)
½	15	16	180	**161 561 302**	0.130	50	95	56	64
¾	20	16	380	**161 561 303**	0.250	58	110	65	72
1	25	16	460	**161 561 304**	0.290	68	123	71	79
1 ¼	32	16	850	**161 561 305**	0.510	84	146	85	94
1 ½	40	16	1080	**161 561 306**	0.750	97	157	89	95
2	50	16	1670	**161 561 307**	1.330	124	183	101	107
2 ½	65	16	2950	**161 561 308**	3.160	166	233	136	144
3	80	16	3600	**161 561 309**	5.040	200	254	141	151
4	100	16	4150	**161 561 310**	8.130	238	301	164	174



Check valve type 561 PVC-U
With fixed flanges JIS

Model:

- Sealing at a minimum water column of 2 m
- Designed for easy installation and removal
- Vibration free even at high flow velocity
- Flow-optimized return cone, double guided
- For vertical installation
- Compact installation length, same as ball valve type 546
- Z-length, end connectors and union nuts **not** compatible with type 360

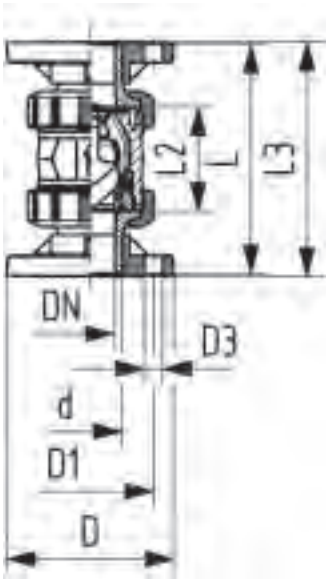

Size (inch)	DN (mm)	PN (bar)	kv-value (Δp=1 bar) (l/min)	EPDM Code	Weight (kg)	D (mm)	D1 (mm)	D3 (mm)	L (mm)	L2 (mm)	L3 (mm)
¾	20	16	380	**161 561 323**	0.520	100	75	15	170	65	172
1	25	16	460	**161 561 324**	0.670	130	90	19	190	71	187
1 ¼	32	16	850	**161 561 325**	1.100	140	100	19	190	85	190
1 ½	40	16	1080	**161 561 326**	1.490	140	105	19	210	89	212
2	50	16	1670	**161 561 327**	2.430	160	120	19	240	101	234



Check valve type 562 PVC-U
With solvent cement sockets Inch BS

Model:

- For horizontal or vertical installation
- Sealing at a minimum water column of 1 m
- Spring loaded, spring made of stainless steel (1.4310)
- Spring available in other materials, see spare parts
- Designed for easy installation and removal
- Vibration free even at high flow velocity
- Flow-optimized return cone, double guided
- Compact installation length, same as ball valve type 546
- Z-length, end connectors and union nuts **not** compatible with type 360
- New DN65-DN100

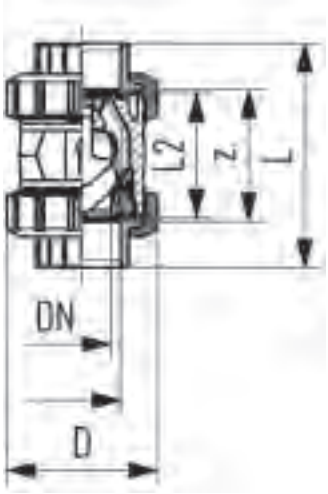

d (mm)	Size (inch)	DN (mm)	PN (bar)	kv-value (Δp=1 bar) (l/min)	EPDM Code	Weight (kg)	FPM Code	Weight (kg)
	⅜	10	16	190	**161 562 061**	0.120	**161 562 071**	0.120
	½	15	16	180	**161 562 062**	0.120	**161 562 072**	0.120
	¾	20	16	380	**161 562 063**	0.250	**161 562 073**	0.270
	1	25	16	460	**161 562 064**	0.280	**161 562 074**	0.280
	1 ¼	32	16	850	**161 562 065**	0.490	**161 562 075**	0.490
	1 ½	40	16	1080	**161 562 066**	0.760	**161 562 076**	0.770
	2	50	16	1670	**161 562 067**	1.378	**161 562 077**	1.370
75		65	16	2950	**161 562 008**	3.160	**161 562 018**	3.170
	3	80	16	3600	**161 562 069**	5.070	**161 562 079**	5.090
	4	100	16	4150	**161 562 070**	8.010	**161 562 080**	8.050

D (mm)	L (mm)	L2 (mm)	z (mm)	closest inch (inch)
50	92	56	60	
50	95	56	60	
58	110	65	69	
68	123	71	75	
84	146	85	89	
97	157	89	97	
124	183	101	110	
166	233	136	144	2 ½
200	254	141	151	
238	301	164	174	



Check valve type 562 PVC-U
With solvent cement sockets JIS

Model:

- For horizontal or vertical installation
- Sealing at a minimum water column of 1 m
- Spring loaded, spring made of stainless steel (1.4310)
- Spring available in other materials, see spare parts
- Designed for easy installation and removal
- Vibration free even at high flow velocity
- Flow-optimized return cone, double guided
- Compact installation length, same as ball valve type 546
- Z-length, end connectors and union nuts **not** compatible with type 360
- New DN65-DN100

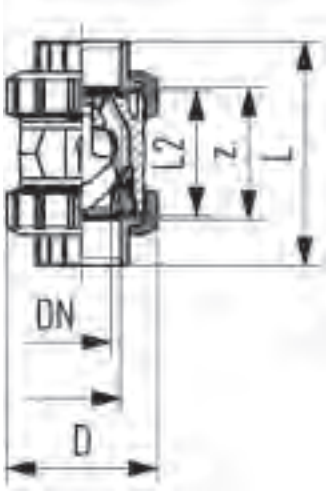

Size (inch)	DN (mm)	PN (bar)	kv-value (Δp=1 bar) (l/min)	EPDM Code	Weight (kg)	D (mm)	L (mm)	L2 (mm)	z (mm)
½	15	16	180	**161 562 302**	0.130	50	95	56	64
¾	20	16	380	**161 562 303**	0.250	58	110	65	72
1	25	16	460	**161 562 304**	0.290	68	123	71	79
1 ¼	32	16	850	**161 562 305**	0.510	84	146	85	94
1 ½	40	16	1080	**161 562 306**	0.750	97	157	89	95
2	50	16	1670	**161 562 307**	1.330	124	183	101	107
2 ½	65	16	2950	**161 562 308**	3.160	166	233	136	144
3	80	16	3600	**161 562 309**	5.040	200	254	141	151
4	100	16	4150	**161 562 310**	8.130	238	301	164	174



Check valve type 562 PVC-U
With fixed flanges JIS

Model:

- For horizontal or vertical installation
- Sealing at a minimum water column of 1 m
- Spring loaded, spring made of stainless steel (1.4310)
- Spring available in other materials, see spare parts
- Designed for easy installation and removal
- Vibration free even at high flow velocity
- Flow-optimized return cone, double guided
- Compact installation length, same as ball valve type 546
- Z-length, end connectors and union nuts **not** compatible with type 360

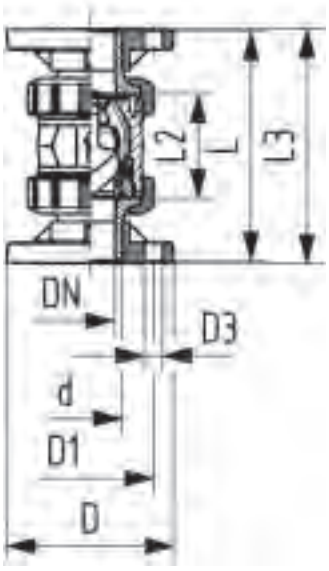

Size (inch)	DN (mm)	PN (bar)	kv-value (Δp=1 bar) (l/min)	EPDM Code	Weight (kg)	D (mm)	D1 (mm)	D3 (mm)	L (mm)	L2 (mm)	L3 (mm)
¾	20	16	380	**161 562 323**	0.520	100	75	15	170	65	172
1	25	16	460	**161 562 324**	0.670	130	90	19	190	71	187
1 ¼	32	16	850	**161 562 325**	1.100	140	100	19	190	85	190
1 ½	40	16	1080	**161 562 326**	1.490	140	105	19	210	89	212
2	50	16	1670	**161 562 327**	2.430	160	120	19	240	101	234

Angle seat valves



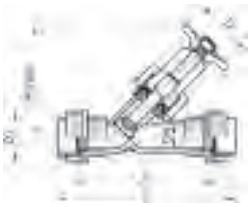

Angle seat valve type 300 PVC-U
Unions with solvent cement sockets JIS

Size (inch)	DN (mm)	PN (bar)	kv-value (Δp=1 bar) (l/min)	PE Code	Weight (kg)	PTFE Code	Weight (kg)
⅜	15	10	95	**161 300 716**	0.335	**161 300 741**	0.340
¾	20	10	180	**161 300 717**	0.380	**161 300 742**	0.385
1	25	10	327	**161 300 718**	0.565	**161 300 743**	0.575
1 ¼	32	10	484	**161 300 719**	0.844	**161 300 744**	0.920
1 ½	40	10	725	**161 300 720**	1.355	**161 300 745**	1.050
2	50	10	1130	**161 300 721**	2.191	**161 300 746**	1.600

Size (inch)	D (mm)	D2 (mm)	L (mm)	L1 (mm)	H max. (mm)
⅜	53	63	194	162	126
¾	53	63	208	170	140
1	60	80	224	180	166
1 ¼	74	80	256	204	191
1 ½	83	100	290	228	233
2	103	100	342	266	264



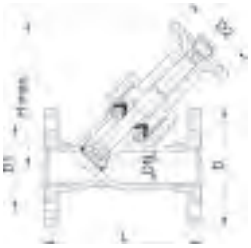

Angle seat valve type 300 PVC-U
With fixed flanges JIS

Size (inch)	DN (mm)	PN (bar)	kv-value (Δp=1 bar) (l/min)	PE Code	Weight (kg)	PTFE Code	Weight (kg)
⅜	15	10	95	**161 300 766**	0.390	**161 300 791**	0.385
¾	20	10	180	**161 300 767**	0.520	**161 300 792**	0.525
1	25	10	327	**161 300 768**	0.810	**161 300 793**	0.810
1 ¼	32	10	484	**161 300 769**	1.220	**161 300 794**	1.240
1 ½	40	10	725	**161 300 770**	1.740	**161 300 795**	1.770
2	50	10	1130	**161 300 771**	2.515	**161 300 796**	2.387

Size (inch)	D (mm)	D1 (mm)	D2 (mm)	L (mm)	H max. (mm)
⅜	95	70	63	130	126
¾	100	75	63	150	140
1	125	90	80	160	166
1 ¼	135	100	80	180	191
1 ½	140	105	100	200	233
2	155	120	100	230	261





Angle seat check valve type 303 PVC-U
Unions with solvent cement sockets JIS

Model:

- For horizontal or vertical installation
- Leakproof even at minimum pressure
- Specific gravity of piston approx. 2 kg/dm³

Size (inch)	DN (mm)	PN (bar)	kv-value (Δp=1 bar) (l/min)	EPDM Code	Weight (kg)	D (mm)	D1 (mm)	H (mm)	L (mm)	z (mm)
½	15	10	95	**161 303 102**	0.300	43	53	65	194	162
¾	20	10	180	**161 303 103**	0.286	47	53	75	208	170
1	25	10	327	**161 303 104**	0.457	56	53	90	224	180
1 ¼	32	10	484	**161 303 105**	0.833	64	74	102	256	204
1 ½	40	10	725	**161 303 106**	1.300	82	83	123	290	228
2	50	10	1130	**161 303 107**	2.205	95	103	144	342	266



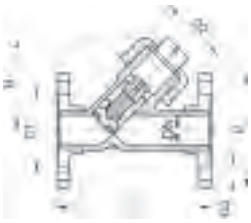

Angle seat check valve type 303 PVC-U
With fixed flanges JIS

Model:

- For horizontal or vertical installation
- Leakproof even at minimum pressure
- Specific gravity of piston approx. 2 kg/dm³

Size (inch)	DN (mm)	PN (bar)	kv-value (Δp=1 bar) (l/min)	EPDM Code	Weight (kg)	D (mm)	D1 (mm)	D2 (mm)	D3 (mm)	H (mm)	L (mm)
½	15	10	95	**161 303 117**	0.330	95	70	48	15	65	130
¾	20	10	180	**161 303 118**	0.450	100	75	54	15	75	150
1	25	10	327	**161 303 119**	0.780	125	90	62	19	90	160
1 ¼	32	10	484	**161 303 120**	1.140	135	100	71	19	102	180
1 ½	40	10	725	**161 303 121**	1.650	140	105	88	19	123	200
2	50	10	1130	**161 303 122**	2.256	155	120	103	19	144	230
2 ½	65	10	1700	**161 303 123**	3.750	185	140	106	19	186	290
3	80	10	2500	**161 303 124**	5.070	200	150	120	19	204	310

Strainers





Line strainer type 305 PVC-U
Transparent body with solvent cement unions JIS

Model:

- Protects valves, pumps, etc. from becoming soiled
- Easy dismantling for cleaning the screens

Cylindrical screens must be ordered separately

Size (inch)	DN (mm)	PN (bar)	kv-value (Δp=1 bar) (l/min)	EPDM Code	Weight (kg)	D (mm)	D1 (mm)	H (mm)	L (mm)	L1 (mm)
½	15	10	35	**192 305 702**	0.271	43	53	65	194	164
¾	20	10	64	**192 305 703**	0.615	47	53	76	208	170
1	25	10	90	**192 305 704**	0.393	56	60	90	224	180
1 ½	40	10	225	**192 305 706**	1.000	82	83	123	290	228
2	50	10	370	**192 305 707**	1.800	95	103	147	342	226





Line strainer type 305 PVC-U
Grey body with fixed flanges JIS

Model:

- Protects valves, pumps, etc. from becoming soiled
- Easy dismantling for cleaning the screens

Cylindrical screens must be ordered separately

Size (inch)	DN (mm)	PN (bar)	kv-value (Δp=1 bar) (l/min)	EPDM Code	Weight (kg)	D (mm)	D1 (mm)	D2 (mm)	D3 (mm)	H (mm)	L (mm)
½	15	10	35	**192 305 717**	0.320	95	70	43	15	65	130
¾	20	10	64	**192 305 718**	0.170	100	75	47	15	76	150
1	25	10	90	**192 305 719**	0.255	125	90	56	19	90	160
1 ¼	32	10	154	**192 305 720**	0.380	135	100	64	19	102	180
1 ½	40	10	225	**192 305 721**	1.239	140	105	82	19	123	200
2	50	10	370	**192 305 722**	1.893	155	120	95	19	147	230
2 ½	65	10	575	**192 305 723**	3.140	185	140	106	19	188	290
3	80	10	905	**192 305 724**	4.140	200	150	120	19	205	310

Screen assemblies



Screen assembly type 050 PVC-U
With solvent cement sockets BS/ASTM

Model:

- [2] Screen with 2 extensions and end plate, solvent cemented
- Modular extensions can be lengthened as required

d (mm)	Size (inch)	DN (mm)	kv-value (Δp=1 bar) (l/min)	Code	Weight (kg)	D (mm)	L (mm)	L1 (mm)	L2 (mm)	L3 (mm)	lamina width (mm)
90	3	80	14790	**161 050 053**	0.930	110	312	345	90	103	3





Screen type 050 PVC-U
With solvent cement sockets BS/ASTM

- For Screen Assemblies Type 050, PVC-U, DN 65-100

d (mm)	Size (inch)	DN (mm)	Code	Weight (kg)	D (mm)	L2 (mm)	lamina width (mm)
75	2 ½	65	**161 090 024**	0.447	110	90	3.0
90	3	80	**161 090 016**	0.300	110	90	2.5
110	4	100	**161 090 017**	0.440	125	135	2.5







Screen type 050 PVC-U
With solvent cement sockets metric

- For Screen Assemblies Type 050, PVC-U, DN 65-100

d (mm)	Size (inch)	DN (mm)	Code	Weight (kg)	D (mm)	L2 (mm)
75	2 ½	65	**161 090 024**	0.447	110	90
90	3	80	**161 090 002**	0.303	110	90
110	4	100	**161 090 003**	0.469	125	135





Extention type 050 PVC-U

- For Screen Assemblies Type 050, PVC-U, DN 65-100

DN-DN (mm)	Code	Weight (kg)	L3 (mm)	Inch (inch)	d-d (mm)
65 - 100	**161 090 019**	0.249	103	2 1/2 - 4	75 - 110





Plate type 050 PVC-U

- For Screen Assemblies Type 050, PVC-U, DN 65-100

DN-DN (mm)	Code	Weight (kg)	D (mm)	L (mm)	Inch (inch)	d-d (mm)
65 - 100	**161 090 018**	0.155	100	16	2 1/2 - 4	75 - 110

PVC-U silicon free		Page
	Unions	422
	Seals	423
	Ball valves type 546	424
	3-Way ball valves type 543	431
	3-Way ball valves electric	438
	3-Way ball valves pneumatic	444
	Metering ball valves type 523	447
	Diaphragm valves	449
	Diaphragm valves pneumatic	456
	Butterfly valves type 567	463
	Lugstyle butterfly valves type 578	465
	Cone check valves	466
	Angle seat valves	470
	Strainers	472

Unions



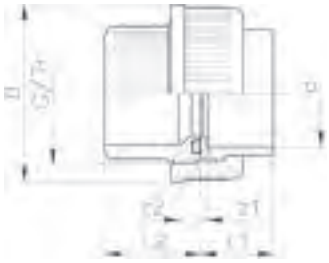

Union for solvent cement jointing PVC-U
Silicone free metric

Model:

- With O-ring gasket
- Silicone free/paint-compatible
- Union End: solvent socket metric
- Union Bush: Solvent socket metric

d (mm)	PN (bar)	EPDM Code	Weight (kg)	FPM Code	Weight (kg)	L2 (mm)	z1 (mm)	z2 (mm)	D (mm)	L1 (mm)	G/Tr (inch)
10	16	**721 510 178**	0.022	**721 510 153**	0.020	22	3	10	31	15	5/8
12	16	**721 510 179**	0.022	**721 510 154**	0.019	22	3	10	31	15	5/8
16	16	**721 510 180**	0.026	**721 510 155**	0.031	24	3	10	35	17	3/4
20	16	**721 510 181**	0.042	**721 510 156**	0.040	26	3	10	43	19	1
25	16	**721 510 182**	0.067	**721 510 157**	0.066	29	3	10	51	22	1 1/4
32	16	**721 510 183**	0.100	**721 510 158**	0.090	33	3	10	58	25	1 1/2
40	16	**721 510 184**	0.180	**721 510 159**	0.175	39	3	12	72	29	2
50	16	**721 510 185**	0.206	**721 510 160**	0.215	46	3	14	83	34	2 1/4
63	16	**721 510 186**	0.357	**721 510 161**	0.380	58	3	18	100	41	2 3/4
75	10	**721 510 187**	0.615	**721 510 162**	0.615	62	3	18	135	47	Tr 108x5
90	10	**721 510 188**	0.925	**721 510 163**	0.925	69	5	18	158	56	Tr 128x5
110	10	**721 510 189**	1.425	**721 510 164**	1.425	72	5	11	188	66	Tr 154x6





Union for solvent cement jointing PVC-U JIS

DN (mm)	Inch (inch)	PN (bar)	EPDM Code	Weight (kg)	FPM Code	z1 (mm)	z2 (mm)	D (mm)	L1 (mm)	L2 (mm)	G/Tr (inch)
15	1/2	16	**721 515 130**	0.066	**721 515 180**	3	13	51	22	29.0	11/4
20	3/4	16	**721 515 131**	0.056	**721 515 181**	3	10	51	29	22.0	11/4
25	1	16	**721 515 132**	0.082	**721 515 182**	3	10	58	32	25.0	11/2
32	11/4	16	**721 515 133**	0.159	**721 515 183**	3	12	72	38	29.0	2
40	11/2	16	**721 515 134**	0.222	**721 515 184**	3	14	83	34	46.3	21/4
50	2	16	**721 515 135**	0.393	**721 515 185**	3	18	100	56	41.0	23/4

Seals



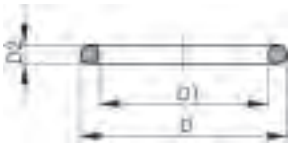

O-Ring gasket silicone free

Model:

- Silicone free/paint-compatible
- Hardness approx. 65° Shore
- For flange adaptors, jointing face with O-ring groove
- Double bagged, 2 pcs in bag

d (mm)	DN (mm)	EPDM Code	FPM Code	D (mm)	D1 (mm)	D2 (mm)
16	10	**748 413 000**	**749 413 000**	26	19	4
20	15	**748 413 001**	**749 413 001**	30	23	4
25	20	**748 413 007**	**749 413 007**	35	28	4
32	25	**748 413 002**	**749 413 002**	43	36	4
40	32	**748 413 003**	**749 413 003**	55	44	5
50	40	**748 413 012**	**749 413 012**	64	53	5
63	50	**748 413 013**	**749 413 013**	80	69	5
75	65	**748 413 014**	**749 413 014**	93	82	5
90	80	**748 413 015**	**749 413 015**	112	101	5
110	100	**748 413 016**	**749 413 016**	134	120	7
125	100	**748 413 017**	**749 413 017**	149	136	7
140	125	**748 413 018**	**749 413 018**	166	152	7
160	150	**748 413 019**	**749 413 019**	191	177	7
200	200	**748 413 163**	**749 413 163**	136	222	7
225	200	**748 413 022**	**749 413 022**	255	241	7
250	250	**748 413 182**	**749 413 182**	280	266	7
280	250	**748 413 173**	**749 413 173**	305	292	7
315	300	**748 413 174**	**749 413 174**	356	342	7

Ball valves type 546





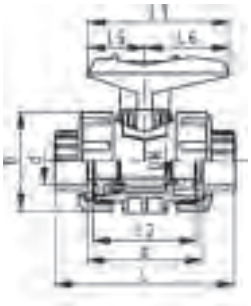

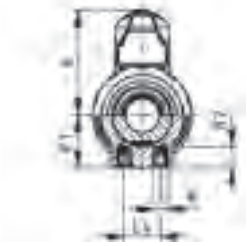

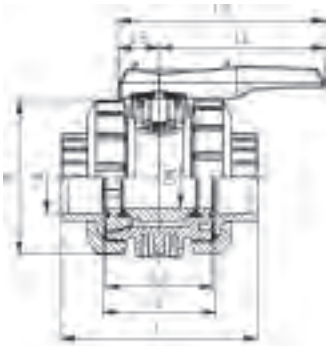

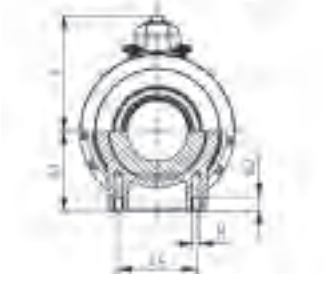

Ball valve type 546 PVC-U SF
With mounting inserts
With solvent cement sockets metric

Model:

- Silicone free/paint-compatible
- For easy installation and removal
- With PVDF ball seal
- Integrated stainless steel mounting inserts
- z-dimension, valve end and union nut are **not compatible** with type 346 (DN10/15-50) resp. type 370 (DN65-100)

Option:

- Individual configuration of the valve (see diagram)
- Multifunctional module with integrated limit switches

d (mm)	DN (mm)	PN (bar)	kv-value (Δp=1 bar) (l/min)	EPDM Code	Weight (kg)	FPM Code	Weight (kg)
16	10	16	71	**800 000 601**	0.150	**800 000 611**	0.150
20	15	16	185	**800 000 602**	0.150	**800 000 612**	0.150
25	20	16	350	**800 000 603**	0.240	**800 000 613**	0.230
32	25	16	700	**800 000 604**	0.342	**800 000 614**	0.330
40	32	16	1000	**800 000 605**	0.600	**800 000 615**	0.600
50	40	16	1600	**800 000 606**	0.800	**800 000 616**	0.800
63	50	16	3100	**800 000 607**	1.460	**800 000 617**	1.460
75	65	16	5000	**800 000 608**	4.286	**800 000 618**	3.567
90	80	16	7000	**800 000 609**	7.400	**800 000 619**	5.401
110	100	16	11000	**800 000 610**	11.600	**800 000 620**	11.600

d (mm)	D (mm)	H (mm)	H1 (mm)	H2 (mm)	L (mm)	L1 (mm)	L2 (mm)	L4 (mm)	L5 (mm)	L6 (mm)	M	z (mm)	closest inch (inch)
16	50	57	27	12	92	77	56	25	32	45	M6	64	⅜
20	50	57	27	12	95	77	56	25	32	45	M6	64	½
25	58	67	30	12	110	97	65	25	39	58	M6	72	¾
32	68	73	36	12	123	97	71	25	39	58	M6	79	1
40	84	90	44	15	146	128	85	45	54	74	M8	94	1 ¼
50	97	97	51	15	157	128	89	45	54	74	M8	95	1 ½
63	124	116	64	15	183	152	101	45	66	87	M8	107	2
75	166	149	85	15	233	270	136	70	64	206	M8	144	2 ½
90	200	161	105	15	254	270	141	70	64	206	M8	151	3
110	238	178	123	22	301	320	164	120	64	256	M12	174	4



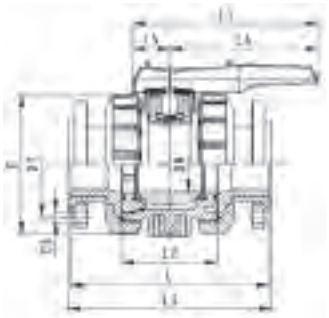



Ball valve type 546 PVC-U SF
With mounting inserts
With backing flanges PVC-U metric

Model:

- Silicone free/paint-compatible
- For easy installation and removal
- With PVDF ball seal
- Integrated stainless steel mounting inserts
- z-dimension, valve end and union nut are **not compatible** with type 346 (DN10/15-50) resp. type 370 (DN65-100)
- Overall length according to EN 558
- Connecting dimension: ISO 7005 PN10, EN 1092 PN10, DIN 2501 PN10

Option:

- Individual configuration of the valve (see diagram)
- Multifunctional module with integrated limit switches

d (mm)	DN (mm)	PN (bar)	kv-value (Δp=1 bar) (l/min)	EPDM Code	Weight (kg)	FPM Code	Weight (kg)
75	65	10	5000	**161 546 128**	7.200	**161 546 138**	7.200
90	80	10	7000	**161 546 129**	10.600	**161 546 139**	10.600
110	100	10	11000	**161 546 130**	16.500	**161 546 140**	16.500

d (mm)	D (mm)	D1 (mm)	D3 (mm)	H (mm)	H1 (mm)	L (mm)	L1 (mm)	L2 (mm)	L3 (mm)	L4 (mm)	L5 (mm)	L6 (mm)	M	closest inch (inch)
75	166	145	18	149	85	284	270	136	290	70	64	206	8	2 ½
90	200	160	18	161	105	300	270	141	310	70	64	206	8	3
110	238	180	18	178	123	340	320	164	350	120	64	256	12	4





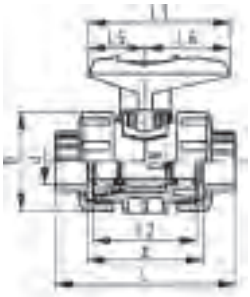

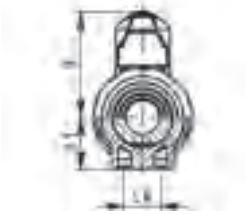

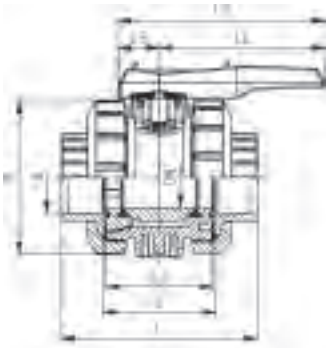

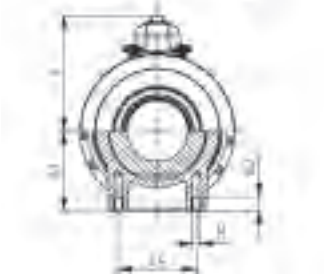

Ball valve type 546 PVC-U SF
With solvent cement sockets metric

Model:

- Silicone free/paint-compatible
- For easy installation and removal
- With PVDF ball seal
- Without mounting inserts
- z-dimension, valve end and union nut are **not compatible** with type 346 (DN10/15-50) resp. type 370 (DN65-100)

Option:

- Individual configuration of the valve (see diagram)
- Multifunctional module with integrated limit switches

d (mm)	DN (mm)	PN (bar)	kv-value (Δp=1 bar) (l/min)	EPDM Code	Weight (kg)	FPM Code	Weight (kg)
16	10	16	71	**161 546 601**	0.150	**161 546 611**	0.150
20	15	16	185	**161 546 602**	0.150	**161 546 612**	0.150
25	20	16	350	**161 546 603**	0.230	**161 546 613**	0.230
32	25	16	700	**161 546 604**	0.343	**161 546 614**	0.330
40	32	16	1000	**161 546 605**	0.599	**161 546 615**	0.603
50	40	16	1600	**161 546 606**	0.800	**161 546 616**	0.800
63	50	16	3100	**161 546 607**	1.522	**161 546 617**	1.460
75	65	16	5000	**161 546 608**	3.792	**161 546 618**	4.900
90	80	16	7000	**161 546 609**	7.400	**161 546 619**	7.400
110	100	16	11000	**161 546 610**	11.600	**161 546 620**	11.600

d (mm)	D (mm)	H (mm)	H1 (mm)	L (mm)	L1 (mm)	L2 (mm)	L4 (mm)	L5 (mm)	L6 (mm)	z (mm)	closest inch (inch)
16	50	57	27	92	77	56	25	32	45	64	⅜
20	50	57	27	95	77	56	25	32	45	64	½
25	58	67	30	110	97	65	25	39	58	72	¾
32	68	73	36	123	97	71	25	39	58	79	1
40	84	90	44	146	128	85	45	54	74	94	1 ¼
50	97	97	51	157	128	89	45	54	74	95	1 ½
63	124	116	64	183	152	101	45	66	87	107	2
75	166	149	85	233	270	136	70	64	206	144	2 ½
90	200	161	105	254	270	141	70	64	206	151	3
110	238	178	123	301	320	164	120	64	256	174	4





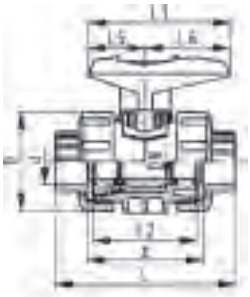

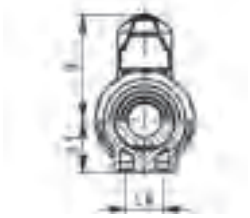

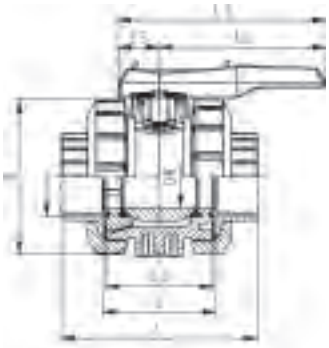

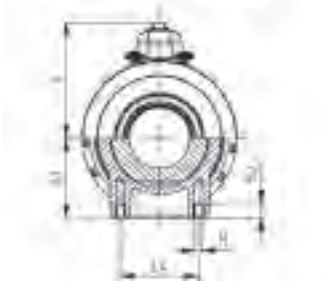

Ball valve type 546 PVC-U OF
With mounting inserts
With solvent cement sockets JIS

Model:

- Oil free
- For easy installation and removal
- Ball seals PTFE
- Integrated stainless steel mounting inserts
- z-dimension, valve end and union nut are **not compatible** with type 346 (DN10/15-50) resp. type 370 (DN65-100)

Option:

- Individual configuration of the valve (see diagram)
- Multifunctional module with integrated limit switches

Size (inch)	DN (mm)	PN (bar)	kv-value (Δp=1 bar) (l/min)	EPDM Code	Weight (kg)	FPM Code	Weight (kg)
½	15	16	185	**161 546 902**	0.155	**161 546 912**	0.156
¾	20	16	350	**161 546 903**	0.239	**161 546 913**	0.242
1	25	16	700	**161 546 904**	0.345	**161 546 914**	0.330
1 ¼	32	16	1000	**161 546 905**	0.100	**161 546 915**	0.622
1 ½	40	16	1600	**161 546 906**	0.850	**161 546 916**	0.867
2	50	16	3100	**161 546 907**	1.576	**161 546 917**	1.592
2 ½	65	16	5000	**161 546 908**	4.333	**161 546 918**	4.900
3	80	16	7000	**161 546 909**	7.400	**161 546 919**	6.273
4	100	16	11000	**161 546 910**	11.500	**161 546 920**	11.500

Size (inch)	D (mm)	H (mm)	H1 (mm)	H2 (mm)	L (mm)	L1 (mm)	L2 (mm)	L4 (mm)	L5 (mm)	L6 (mm)	M	z (mm)
½	50	57	27	12	95	77	56	25	32	45	M6	64
¾	58	67	30	12	110	97	65	25	39	58	M6	72
1	68	73	36	12	123	97	71	25	39	58	M6	79
1 ¼	84	90	44	15	146	128	85	45	54	74	M8	94
1 ½	97	97	51	15	157	128	89	45	54	74	M8	95
2	124	116	64	15	183	152	101	45	66	87	M8	107
2 ½	166	149	85	15	233	270	136	70	64	206	M8	144
3	200	161	105	15	254	270	141	70	64	206	M8	151
4	238	178	123	22	301	320	164	120	64	256	M12	174





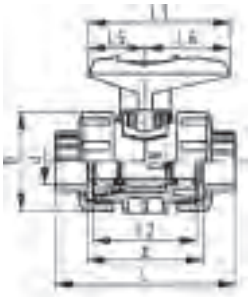

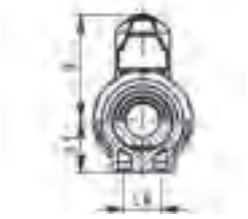

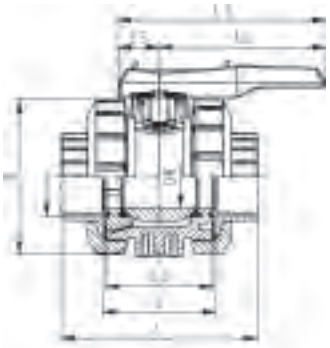

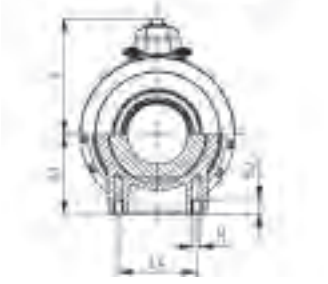

Ball valve type 546 PVC-U OF
With solvent cement sockets JIS

Model:

- Oil free
- For easy installation and removal
- Ball seals PTFE
- Without mounting inserts
- z-dimension, valve end and union nut are **not compatible** with type 346 (DN10/15-50) resp. type 370 (DN65-100)

Option:

- Individual configuration of the valve (see diagram)
- Multifunctional module with integrated limit switches

Size (inch)	DN (mm)	PN (bar)	kv-value (Δp=1 bar) (l/min)	EPDM Code	Weight (kg)	FPM Code	Weight (kg)
½	15	16	185	**161 546 502**	0.149	**161 546 512**	0.150
¾	20	16	350	**161 546 503**	0.233	**161 546 513**	0.235
1	25	16	700	**161 546 504**	0.342	**161 546 514**	0.330
1 ¼	32	16	1000	**161 546 505**	0.610	**161 546 515**	0.610
1 ½	40	16	1600	**161 546 506**	0.846	**161 546 516**	0.815
2	50	16	3100	**161 546 507**	1.495	**161 546 517**	1.578
2 ½	65	16	5000	**161 546 508**	4.900	**161 546 518**	3.559
3	80	16	7000	**161 546 509**	7.400	**161 546 519**	7.400
4	100	16	11000	**161 546 510**	11.500	**161 546 520**	11.500

Size (inch)	D (mm)	H (mm)	H1 (mm)	L (mm)	L1 (mm)	L2 (mm)	L4 (mm)	L5 (mm)	L6 (mm)	z (mm)
½	50	57	27	95	77	56	25	32	45	64
¾	58	67	30	110	97	65	25	39	58	72
1	68	73	36	123	97	71	25	39	58	79
1 ¼	84	90	44	146	128	85	45	54	74	94
1 ½	97	97	51	157	128	89	45	54	74	95
2	124	116	64	183	152	101	45	66	87	107
2 ½	166	149	85	233	270	136	70	64	206	144
3	200	161	105	254	270	141	70	64	206	151
4	238	178	123	301	320	164	120	64	256	174



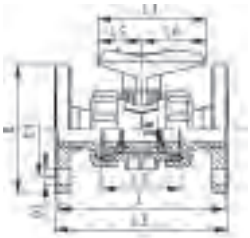

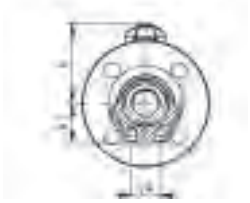

Ball valve type 546 PVC-U OF
With fixed flanges PVC-U JIS

Model:

- Oil free
- For easy installation and removal
- Ball seals PTFE
- Without mounting inserts
- z-dimension, valve end and union nut are not compatible with type 346

Option:

- Individual configuration of the valve (see diagram)
- Multifunctional module with integrated limit switches

Size (inch)	DN (mm)	PN (bar)	kv-value (Δp=1 bar) (l/min)	EPDM Code	Weight (kg)	FPM Code	Weight (kg)
½	15	16	185	**161 546 922**	0.415	**161 546 932**	0.415
¾	20	16	350	**161 546 923**	0.535	**161 546 933**	0.535
1	25	16	700	**161 546 924**	0.825	**161 546 934**	0.825
1 ¼	32	16	1000	**161 546 925**	1.385	**161 546 935**	1.385
1 ½	40	16	1600	**161 546 926**	1.620	**161 546 936**	1.620
2	50	16	3100	**161 546 927**	2.630	**161 546 937**	2.630

Size (inch)	D (mm)	D1 (mm)	D3 (mm)	H (mm)	H1 (mm)	L1 (mm)	L2 (mm)	L3 (mm)	L4 (mm)	L5 (mm)	L6 (mm)	T (mm)
½	95	70	15	57	27	77	56	143	25	32	45	14
¾	100	75	15	67	30	97	65	172	25	39	58	14
1	125	90	15	73	36	97	71	187	25	39	58	14
1 ¼	135	100	19	90	44	128	85	190	45	54	74	17
1 ½	140	105	19	97	51	128	89	212	45	54	74	18
2	155	120	19	116	64	152	101	234	45	66	87	20



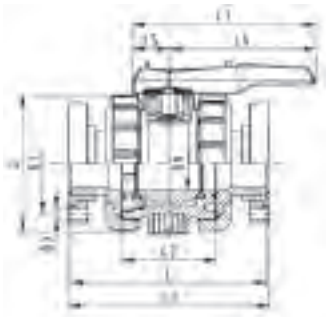



Ball valve type 546 PVC-U OF
With backing flanges PVC-U JIS

Model:

- Oil free
- For easy installation and removal
- Ball seals PTFE
- Without mounting inserts
- z-dimension, valve end and union nut are **not compatible** with type 346 (DN10/15-50) resp. type 370 (DN65-100)
- Overall length according to EN 558
- Connecting dimensions: JIS B 2220, 10K

Option:

- Individual configuration of the valve (see diagram)
- Multifunctional module with integrated limit switches

Size (inch)	DN (mm)	PN (bar)	kv-value (Δp=1 bar) (l/min)	EPDM Code	Weight (kg)	FPM Code	Weight (kg)
2 ½	65	10	5000	**161 546 468**	5.600	**161 546 478**	5.600
3	80	10	7000	**161 546 469**	8.400	**161 546 479**	8.400
4	100	10	11000	**161 546 470**	13.100	**161 546 480**	13.100

Size (inch)	D (mm)	D1 (mm)	D3 (mm)	H (mm)	H1 (mm)	L (mm)	L1 (mm)	L2 (mm)	L3 (mm)	L4 (mm)	L5 (mm)	L6 (mm)
2 ½	166	140	19	149	85	284	270	136	290	70	64	206
3	200	150	19	161	105	300	270	141	310	70	64	206
4	238	175	19	178	123	340	320	164	350	120	64	256





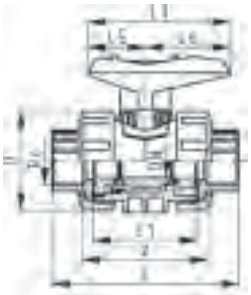



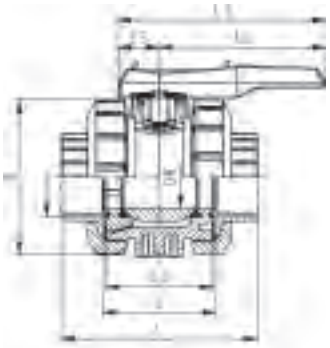

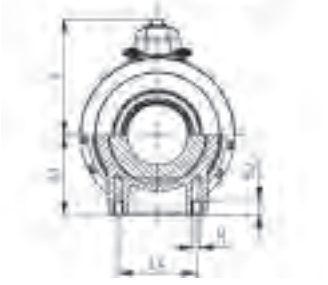

Ball valve type 546 PVC-U OF
With threaded sockets Rc

Model:

- Oil free
- For easy installation and removal
- Ball seals PTFE
- Without mounting inserts
- z-dimension, valve end and union nut are **not compatible** with type 346 (DN10/15-50) resp. type 370 (DN65-100)

Option:

- Individual configuration of the valve (see diagram)
- Multifunctional module with integrated limit switches

Rc (inch)	DN (mm)	PN (bar)	kv-value (Δp=1 bar) (l/min)	EPDM Code	Weight (kg)	FPM Code	Weight (kg)
½	15	10	185	**161 546 522**	0.155	**161 546 532**	0.160
¾	20	10	350	**161 546 523**	0.240	**161 546 533**	0.240
1	25	10	700	**161 546 524**	0.345	**161 546 534**	0.345
1 ¼	32	10	1000	**161 546 525**	0.610	**161 546 535**	0.610
1 ½	40	10	1600	**161 546 526**	0.835	**161 546 536**	0.835
2	50	10	3100	**161 546 527**	1.520	**161 546 537**	1.520
2 ½	65	10	5000	**161 546 528**	5.000	**161 546 538**	5.000
3	80	10	7000	**161 546 529**	7.500	**161 546 539**	7.500
4	100	10	11000	**161 546 530**	11.700	**161 546 540**	11.700

Rc (inch)	D (mm)	H (mm)	H1 (mm)	L (mm)	L1 (mm)	L2 (mm)	L4 (mm)	L5 (mm)	L6 (mm)	z (mm)
½	50	57	27	100	77	56	25	32	45	66
¾	58	67	30	114	97	65	25	39	58	78
1	68	73	36	127	97	71	25	39	58	85
1 ¼	84	90	44	146	128	85	45	54	74	98
1 ½	97	97	51	152	128	89	45	54	74	104
2	124	116	64	177	152	101	45	66	87	119
2 ½	166	149	85	233	270	136	70	64	206	144
3	200	161	105	254	270	141	70	64	206	151
4	238	178	123	301	320	164	120	64	256	174

3-Way ball valves type 543



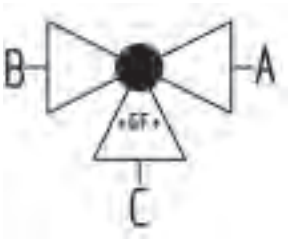



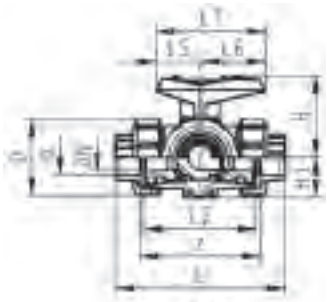

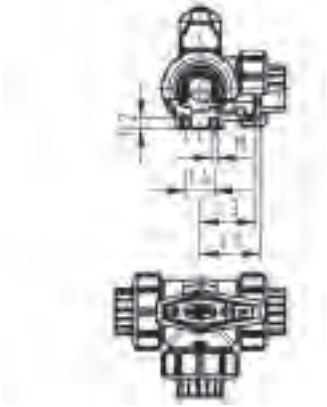

3-Way ball valve type 543 PVC-U SF
Horizontal/L-port
With solvent cement sockets metric

Model:

- Silicone free/paint-compatible
- For easy installation and removal (valve end and union nut are compatible with type 546)
- Ball seals PVDF
- Pneumatic or electric actuator available separately
- Angle of operation 360° without turn limiter
- Turn limiter 90° enclosed, in different positions usable as a clip-on ring
- Integrated stainless steel mounting inserts
- Delivery status A-C opened, see flow scheme

d (mm)	DN (mm)	PN (bar)	kv-value (Δp=1 bar) (l/min)	EPDM Code	Weight (kg)	FPM Code	Weight (kg)
16	10	10	50	**161 543 141**	0.245	**161 543 151**	0.245
20	15	10	75	**161 543 142**	0.251	**161 543 152**	0.251
25	20	10	150	**161 543 143**	0.343	**161 543 153**	0.361
32	25	10	280	**161 543 144**	0.524	**161 543 154**	0.551
40	32	10	480	**161 543 145**	0.938	**161 543 155**	0.938
50	40	10	620	**161 543 146**	1.390	**161 543 156**	1.390
63	50	10	1230	**161 543 147**	2.705	**161 543 157**	2.705

d (mm)	D (mm)	H (mm)	H1 (mm)	H2 (mm)	L (mm)	L1 (mm)	L2 (mm)	L3 (mm)	L4 (mm)	L5 (mm)	L6 (mm)	M	z (mm)	z1 (mm)	closest inch (inch)
16	50	57	28	8	109	77	73	36	25	32	45	6	81	40	⅜
20	50	57	28	8	112	77	73	36	25	32	45	6	81	40	½
25	58	67	32	8	131	97	86	43	25	39	58	6	94	47	¾
32	68	73	36	8	151	97	99	50	25	39	58	6	107	54	1
40	84	90	45	9	181	128	120	60	45	54	74	8	130	65	1 ¼
50	97	97	51	9	205	128	137	69	45	54	74	8	143	72	1 ½
63	124	116	65	9	261	152	179	89	45	66	87	8	185	92	2



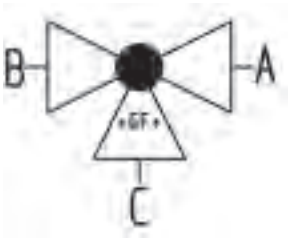



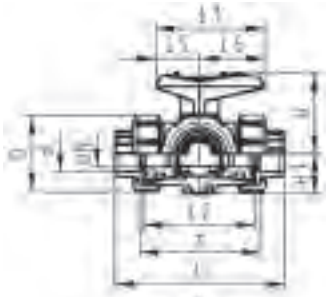

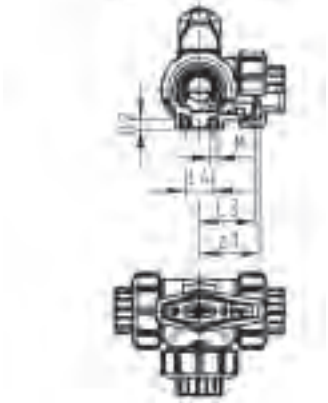

3-Way ball valve type 543 PVC-U SF
Horizontal/T-port
With solvent cement sockets metric

Model:

- Silicone free/paint-compatible
- For easy installation and removal (valve end and union nut are compatible with type 546)
- Ball seals PVDF
- Pneumatic or electric actuator available separately
- Angle of operation 360° without turn limiter
- Turn limiter 90° enclosed, in different positions usable as a clip-on ring
- Integrated stainless steel mounting inserts
- Delivery status A-B-C opened, see flow scheme

d (mm)	DN (mm)	PN (bar)	kv-value (Δp=1 bar) (l/min)	EPDM Code	Weight (kg)	FPM Code	Weight (kg)
16	10	10	140	**161 543 341**	0.244	**161 543 351**	0.244
20	15	10	200	**161 543 342**	0.232	**161 543 352**	0.250
25	20	10	470	**161 543 343**	0.339	**161 543 353**	0.359
32	25	10	793	**161 543 344**	0.544	**161 543 354**	0.544
40	32	10	1290	**161 543 345**	0.891	**161 543 355**	0.927
50	40	10	1910	**161 543 346**	1.369	**161 543 356**	1.369
63	50	10	3100	**161 543 347**	2.660	**161 543 357**	2.660

d (mm)	D (mm)	H (mm)	H1 (mm)	H2 (mm)	L (mm)	L1 (mm)	L2 (mm)	L3 (mm)	L4 (mm)	L5 (mm)	L6 (mm)	M	z (mm)	z1 (mm)	closest inch (inch)
16	50	57	28	8	109	77	73	36	25	32	45	6	81	40	⅜
20	50	57	28	8	112	77	73	36	25	32	45	6	81	40	½
25	58	67	32	8	131	97	86	43	25	39	58	6	94	47	¾
32	68	73	36	8	151	97	99	50	25	39	58	6	107	54	1
40	84	90	45	9	181	128	120	60	45	54	74	8	130	65	1 ¼
50	97	97	51	9	205	128	137	69	45	54	74	8	143	72	1 ½
63	124	116	65	9	261	152	179	89	45	66	87	8	185	92	2



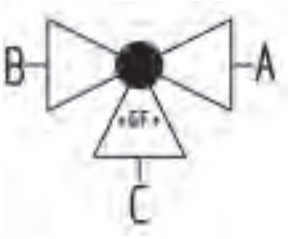

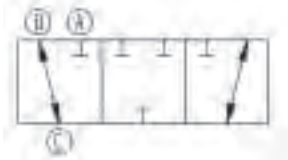

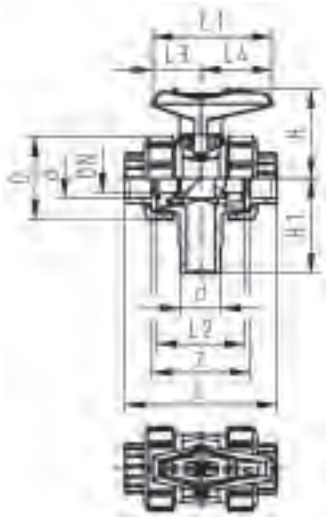

3-Way ball valve type 543 PVC-U SF
Vertical/L-port
With solvent cement sockets metric

Model:

- Silicone free/paint-compatible
- Vertical inlet solvent cement spigot metric
- Easy installation and removal using union on third outlet
- Ball seals PVDF
- Electric actuator available separately
- Angle of operation 360° without turn limiter
- Delivery status B-C opened, see flow scheme

Mode of action:

- For interconnection of two inputs

d (mm)	DN (mm)	PN (bar)	kv-value (Δp=1 bar) (l/min)	EPDM Code	Weight (kg)	FPM Code	Weight (kg)
16	10	10	49	**161 543 781**	0.156	**161 543 791**	0.162
20	15	10	77	**161 543 782**	0.166	**161 543 792**	0.166
25	20	10	146	**161 543 783**	0.255	**161 543 793**	0.255
32	25	10	260	**161 543 784**	0.372	**161 543 794**	0.372
40	32	10	437	**161 543 785**	0.622	**161 543 795**	0.622
50	40	10	667	**161 543 786**	0.886	**161 543 796**	0.886
63	50	10	1293	**161 543 787**	1.617	**161 543 797**	1.617

d (mm)	D (mm)	H (mm)	H1 (mm)	L (mm)	L1 (mm)	L2 (mm)	L3 (mm)	L4 (mm)	z (mm)	closest inch (inch)
16	50	57	62	92	77	56	32	45	64	⅜
20	50	57	62	95	77	56	32	45	64	½
25	58	67	72	111	97	66	39	58	74	¾
32	68	73	77	123	97	71	39	58	79	1
40	84	90	87	146	128	85	54	74	95	1 ¼
50	97	97	97	157	128	89	54	74	95	1 ½
63	124	116	112	183	152	101	66	87	107	2



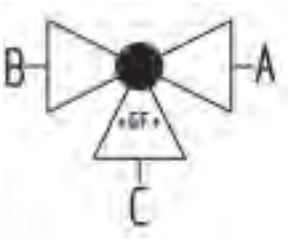



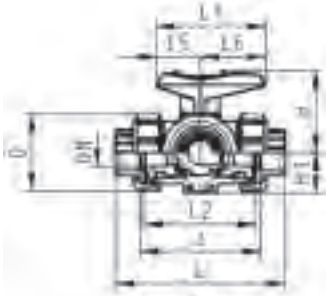

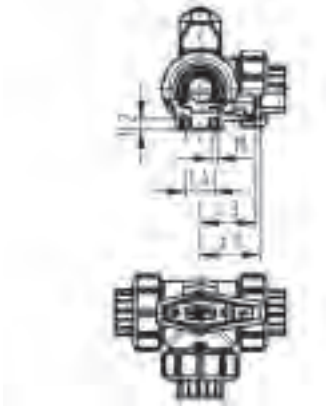

3-Way ball valve type 543 PVC-U OF
Horizontal/L-port
With solvent cement sockets JIS

Model:

- Oil free
- For easy installation and removal (valve end and union nut are compatible with type 546)
- Ball seals PTFE
- Pneumatic or electric actuator available separately
- Angle of operation 360° without turn limiter
- Turn limiter 90° enclosed, in different positions usable as a clip-on ring
- Integrated stainless steel mounting inserts
- Delivery status A-C opened, see flow scheme

Size (inch)	DN (mm)	PN (bar)	kv-value (Δp=1 bar) (l/min)	EPDM Code	Weight (kg)	FPM Code	Weight (kg)
½	15	10	75	**161 543 842**	0.228	**161 543 852**	0.231
¾	20	10	150	**161 543 843**	0.361	**161 543 853**	0.361
1	25	10	280	**161 543 844**	0.528	**161 543 854**	0.551
1 ¼	32	10	480	**161 543 845**	0.938	**161 543 855**	0.938
1 ½	40	10	620	**161 543 846**	1.395	**161 543 856**	1.390
2	50	10	1230	**161 543 847**	2.703	**161 543 857**	2.705

Size (inch)	D (mm)	H (mm)	H1 (mm)	H2 (mm)	L (mm)	L1 (mm)	L2 (mm)	L3 (mm)	L4 (mm)	L5 (mm)	L6 (mm)	M	z (mm)	z1 (mm)
½	50	57	28	8	112	77	73	36	25	32	45	6	81	40
¾	58	67	32	8	131	97	86	43	25	39	58	6	94	47
1	68	73	36	8	151	97	99	50	25	39	58	6	107	54
1 ¼	84	90	45	9	181	128	120	60	45	54	74	8	130	65
1 ½	97	97	51	9	205	128	137	69	45	54	74	8	143	72
2	124	116	65	9	261	152	179	89	45	66	87	8	185	92



3-Way ball valve type 543 PVC-U OF
Horizontal/T-port
With solvent cement sockets JIS

Model:

- Oil free
- For easy installation and removal (valve end and union nut are compatible with type 546)
- Ball seals PTFE
- Pneumatic or electric actuator available separately
- Angle of operation 360° without turn limiter
- Turn limiter 90° enclosed, in different positions usable as a clip-on ring
- Integrated stainless steel mounting inserts
- Delivery status A-B-C opened, see flow scheme

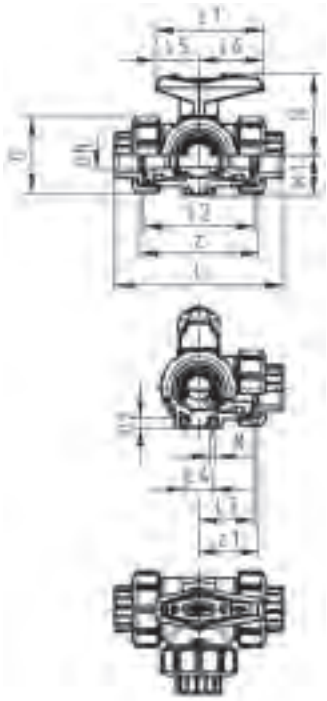

Size (inch)	DN (mm)	PN (bar)	kv-value (Δp=1 bar) (l/min)	EPDM Code	Weight (kg)	FPM Code	Weight (kg)
½	15	10	200	**161 543 582**	0.250	**161 543 592**	0.250
¾	20	10	470	**161 543 583**	0.359	**161 543 593**	0.359
1	25	10	793	**161 543 584**	0.523	**161 543 594**	0.544
1 ¼	32	10	1290	**161 543 585**	0.927	**161 543 595**	0.927
1 ½	40	10	1910	**161 543 586**	1.369	**161 543 596**	1.369
2	50	10	3100	**161 543 587**	2.683	**161 543 597**	2.660

Size (inch)	D (mm)	H (mm)	H1 (mm)	H2 (mm)	L (mm)	L1 (mm)	L2 (mm)	L3 (mm)	L4 (mm)	L5 (mm)	L6 (mm)	M	z (mm)	z1 (mm)
½	50	57	28	8	112	77	73	36	25	32	45	6	81	40
¾	58	67	32	8	131	97	86	43	25	39	58	6	94	47
1	68	73	36	8	151	97	99	50	25	39	58	6	107	54
1 ¼	84	90	45	9	181	128	120	60	45	54	74	8	130	65
1 ½	97	97	51	9	205	128	137	69	45	54	74	8	143	72
2	124	116	65	9	261	152	179	89	45	66	87	8	185	92

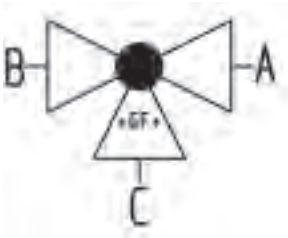





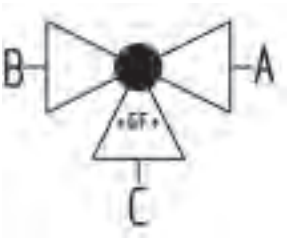

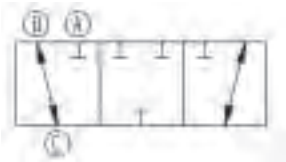

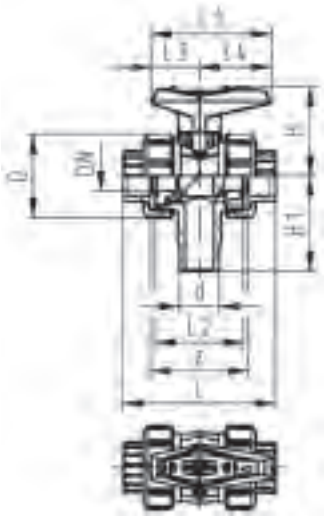

3-Way ball valve type 543 PVC-U OF
Vertical/L-port
With solvent cement sockets JIS

Model:

- Oil free
- Vertical inlet solvent cement spigot metric
- Easy installation and removal using union on third outlet
- Ball seals PTFE
- Electric actuator available separately
- Angle of operation 360° without turn limiter
- Delivery status B-C opened, see flow scheme

Mode of action:

- For interconnection of two inputs

Size (inch)	DN (mm)	PN (bar)	kv-value (Δp=1 bar) (l/min)	EPDM Code	Weight (kg)	FPM Code	Weight (kg)
½	15	10	77	**161 543 802**	0.166	**161 543 812**	0.166
¾	20	10	146	**161 543 803**	0.255	**161 543 813**	0.255
1	25	10	260	**161 543 804**	0.372	**161 543 814**	0.372
1 ¼	32	10	437	**161 543 805**	0.622	**161 543 815**	0.622
1 ½	40	10	667	**161 543 806**	0.886	**161 543 816**	0.886
2	50	10	1293	**161 543 807**	1.617	**161 543 817**	1.617

Size (inch)	D (mm)	H (mm)	H1 (mm)	L (mm)	L1 (mm)	L2 (mm)	L3 (mm)	L4 (mm)	z (mm)
½	50	57	62	95	77	56	32	45	64
¾	58	67	72	111	97	66	39	58	74
1	68	73	77	123	97	71	39	58	79
1 ¼	84	90	87	146	128	85	54	74	95
1 ½	97	97	97	157	128	89	54	74	95
2	124	116	112	183	152	101	66	87	107



3-Way ball valve type 543 PVC-U OF
Vertical diverter ball
With solvent cement sockets JIS

Model:

- Oil free
- Vertical inlet solvent cement spigot metric
- Easy installation and removal using union on third outlet
- Ball seals PTFE
- Electric actuator available separately
- Angle of operation 360° without turn limiter
- Delivery status B-C opened, see flow scheme

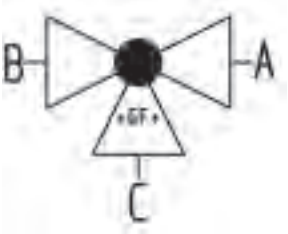

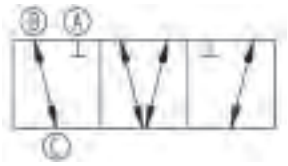

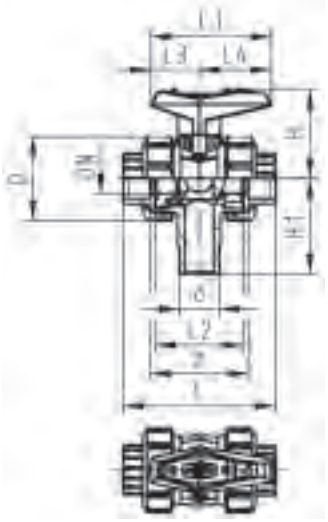

Size (inch)	DN (mm)	PN (bar)	kv-value (Δp=1 bar) (l/min)	EPDM Code	Weight (kg)	FPM Code	Weight (kg)
½	15	10	77	**161 543 982**	0.165	**161 543 992**	0.165
¾	20	10	146	**161 543 983**	0.243	**161 543 993**	0.253
1	25	10	260	**161 543 984**	0.354	**161 543 994**	0.365
1 ¼	32	10	437	**161 543 985**	0.611	**161 543 995**	0.611
1 ½	40	10	667	**161 543 986**	0.880	**161 543 996**	0.865
2	50	10	1293	**161 543 987**	1.604	**161 543 997**	1.572

Size (inch)	D (mm)	H (mm)	H1 (mm)	L (mm)	L1 (mm)	L2 (mm)	L3 (mm)	L4 (mm)	z (mm)
½	50	57	62	95	77	56	32	45	64
¾	58	67	72	111	97	66	39	58	74
1	68	73	77	123	97	71	39	58	79
1 ¼	84	90	87	146	128	85	54	74	95
1 ½	97	97	97	157	128	89	54	74	95
2	124	116	112	183	152	101	66	87	107

3-Way ball valves electric



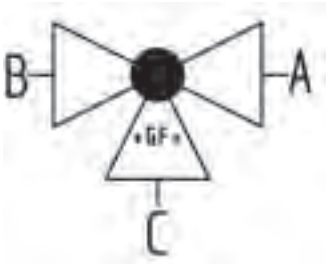

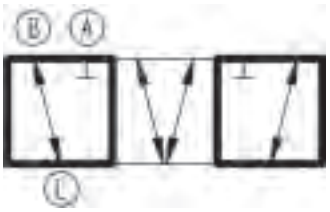

3-Way ball valve type 170 PVC-U OF
Vertical diverter ball 100-230V
With manual emergency override
With solvent cement sockets JIS

Model:

- Voltage 100-230 V, 50-60 Hz
- Basic position B-C opened, activated position A-C opened, see flow scheme
- Other positions possible by adjusting the limit switches
- Factory set control range 90°<)
- Heating element, position feedback (Open/Close/ Middle)
- Integrated stainless steel mounting inserts

Option:

- Optional accessories: Fail-safe return unit, Monitoring board, Position controller, Profibus DP board

Size (inch)	DN (mm)	PN (bar)	kv-value (Δp=1 bar) (l/min)	EA	EPDM Code	Weight (kg)
½	15	10	77	EA25	**199 170 393**	3.550
¾	20	10	146	EA25	**199 170 394**	2.042
1	25	10	260	EA25	**199 170 395**	2.148
1 ¼	32	10	437	EA25	**199 170 396**	2.260
1 ½	40	10	667	EA25	**199 170 397**	2.543
2	50	10	1293	EA25	**199 170 398**	2.797

Size (inch)	D (mm)	H (mm)	H1 (mm)	H2 (mm)	H3 (mm)	H5 (mm)	L (mm)	L1 (mm)	L2 (mm)	L5 (mm)	L6 (mm)	L7 (mm)	L8 (mm)	z (mm)
½	50	231	62	64	94	167	95	180	56	97	83	122	33	64
¾	58	240	72	73	94	167	111	180	66	97	83	122	33	74
1	68	240	77	73	94	167	123	180	71	97	83	122	33	79
1 ¼	84	251	87	84	94	167	146	180	85	97	83	122	33	95
1 ½	97	251	97	84	94	167	157	180	89	97	83	122	33	95
2	124	273	112	106	94	167	183	180	101	97	83	122	33	107

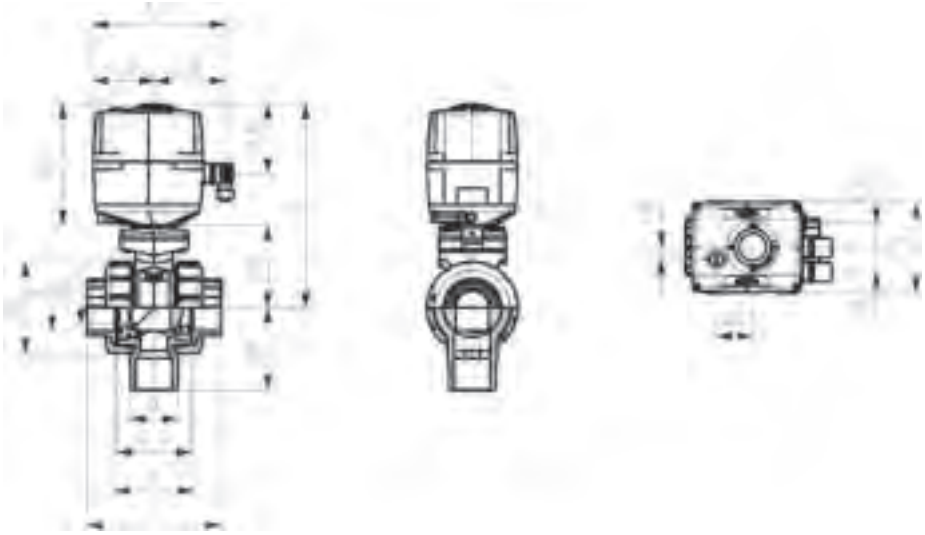



3-Way ball valve type 185 PVC-U OF
Horizontal/L-port 100-230V
With manual emergency override
With solvent cement sockets JIS

Model:

- Built on with electric actuator EA21
- Voltage 100-230 V, 50-60 Hz
- Control range 90°<)
- Basic position A-C opened, activated position B-C opened, see flow scheme
- Other positions possible by adjusting the limit switches
- Control time 5 s/90°<)
- For easy installation and removal
- Integrated stainless steel mounting inserts
- Oil free

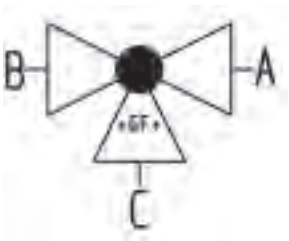



Size (inch)	DN (mm)	PN (bar)	kv-value (Δp=1 bar) (l/min)	EPDM Code	Weight (kg)	FPM Code	Weight (kg)
½	15	10	75	**199 185 883**	2.128	**199 185 893**	2.128
¾	20	10	150	**199 185 884**	2.256	**199 185 894**	2.256
1	25	10	280	**199 185 885**	2.446	**199 185 895**	2.446
1 ¼	32	10	480	**199 185 886**	2.870	**199 185 896**	2.870
1 ½	40	10	620	**199 185 887**	3.717	**199 185 897**	3.322
2	50	10	1230	**199 185 888**	4.683	**199 185 898**	4.683

Size (inch)	D (mm)	H (mm)	H1 (mm)	H2 (mm)	H3 (mm)	H5 (mm)	H6 (mm)	L (mm)	L1 (mm)	L2 (mm)	L3 (mm)	L4 (mm)	L5 (mm)	L6 (mm)	L7 (mm)
½	50	231	28	64	94	167	8	112	180	73	36	25	97	83	122
¾	58	240	32	73	94	167	8	131	180	86	43	25	97	83	122
1	68	240	36	73	94	167	8	151	180	99	50	25	97	83	122
1 ¼	84	251	45	84	94	167	9	181	180	120	60	45	97	83	122
1 ½	97	251	51	84	94	167	9	205	180	137	69	45	97	83	122
2	124	273	65	106	94	167	9	261	180	179	89	45	97	83	122

Size (inch)	L8 (mm)	M	z (mm)	z1 (mm)
½	33	6	81	40
¾	33	6	94	47
1	33	6	107	54
1 ¼	33	8	130	65
1 ½	33	8	143	72
2	33	8	185	92

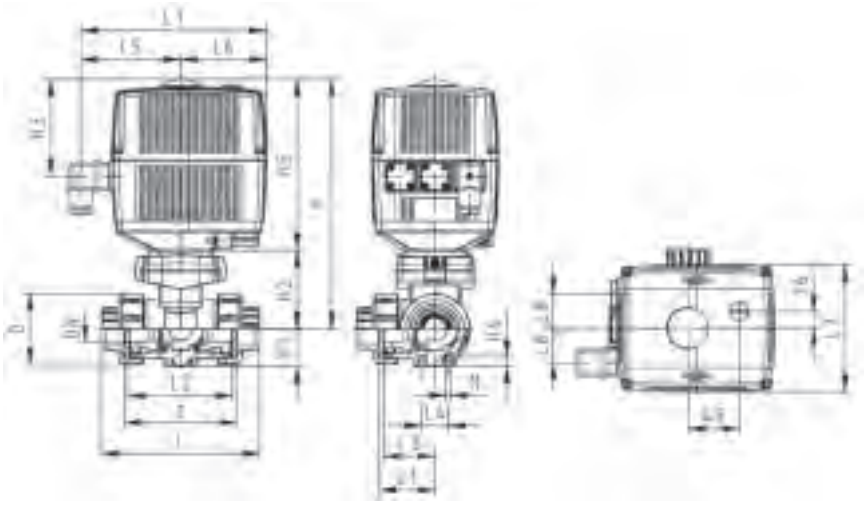



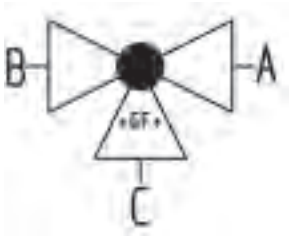

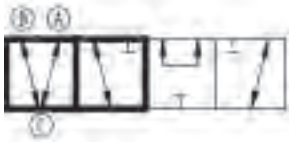

3-Way ball valve type 185 PVC-U OF
Horizontal/T-port 100-230V
With manual emergency override
With solvent cement sockets JIS

Model:

- Built on with electric actuator EA21
- Voltage 100-230 V, 50-60 Hz
- Control range 90°<)
- Basic position A-B-C opened, activated position B-C opened, see flow scheme
- Other positions possible by adjusting the limit switches
- Control time 5 s/90°<)
- For easy installation and removal
- Integrated stainless steel mounting inserts
- Oil free

Size (inch)	DN (mm)	PN (bar)	kv-value (Δp=1 bar) (l/min)	EPDM Code	Weight (kg)	FPM Code	Weight (kg)
½	15	10	200	**199 185 903**	2.127	**199 185 913**	2.127
¾	20	10	470	**199 185 904**	2.254	**199 185 914**	2.254
1	25	10	793	**199 185 905**	2.439	**199 185 915**	2.439
1 ¼	32	10	1290	**199 185 906**	2.859	**199 185 916**	2.859
1 ½	40	10	1910	**199 185 907**	3.301	**199 185 917**	3.301
2	50	10	3100	**199 185 908**	4.638	**199 185 918**	4.638

Size (inch)	D (mm)	H (mm)	H1 (mm)	H2 (mm)	H3 (mm)	H5 (mm)	H6 (mm)	L (mm)	L1 (mm)	L2 (mm)	L3 (mm)	L4 (mm)	L5 (mm)	L6 (mm)	L7 (mm)
½	50	231	28	64	94	167	8	112	180	73	36	25	97	83	122
¾	58	240	32	73	94	167	8	131	180	86	43	25	97	83	122
1	68	240	36	73	94	167	8	151	180	99	50	25	97	83	122
1 ¼	84	251	45	84	94	167	9	181	180	120	60	45	97	83	122
1 ½	97	251	51	84	94	167	9	205	180	137	69	45	97	83	122
2	124	273	65	106	94	167	9	261	180	179	89	45	97	83	122

Size (inch)	L8 (mm)	M	z (mm)	z1 (mm)
½	33	6	81	40
¾	33	6	94	47
1	33	6	107	54
1 ¼	33	8	130	65
1 ½	33	8	143	72
2	33	8	185	92

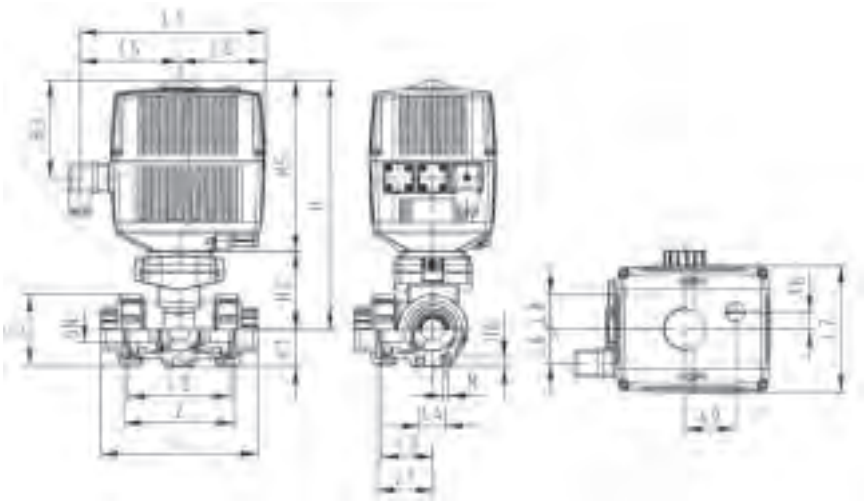



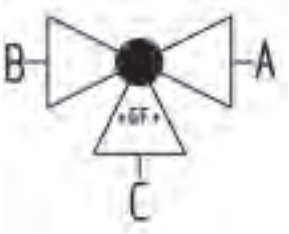

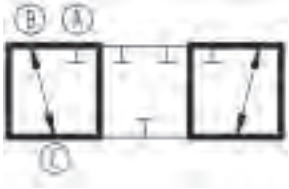

3-Way ball valve type 188 PVC-U OF
Vertical/L-port 100-230V
With manual emergency override
With solvent cement sockets JIS

Model:

- Vertical inlet solvent cement spigot metric
- Built on with electric actuator EA21
- Voltage 100-230 V, 50-60 Hz
- Control range 180°<)
- Basic position B-C opened, activated position A-C opened, see flow scheme
- Control time 10 s/180°<)
- Easy installation and removal using union on third outlet
- Oil free

Size (inch)	DN (mm)	PN (bar)	kv-value (Δp=1 bar) (l/min)	EPDM Code	Weight (kg)	FPM Code	Weight (kg)
½	15	10	77	**199 188 353**	3.212	**199 188 363**	3.595
¾	20	10	146	**199 188 354**	2.043	**199 188 364**	2.043
1	25	10	260	**199 188 355**	2.150	**199 188 365**	2.150
1 ¼	32	10	437	**199 188 356**	2.267	**199 188 366**	2.267
1 ½	40	10	667	**199 188 357**	2.554	**199 188 367**	2.554
2	50	10	1293	**199 188 358**	2.818	**199 188 368**	2.818

Size (inch)	D (mm)	H (mm)	H1 (mm)	H2 (mm)	H3 (mm)	H5 (mm)	L (mm)	L1 (mm)	L2 (mm)	L5 (mm)	L6 (mm)	L7 (mm)	L8 (mm)	z (mm)
½	50	231	62	64	94	167	95	180	56	97	83	122	33	64
¾	58	240	72	73	94	167	111	180	66	97	83	122	33	74
1	68	240	77	73	94	167	123	180	71	97	83	122	33	79
1 ¼	84	251	87	84	94	167	146	180	85	97	83	122	33	95
1 ½	97	251	97	84	94	167	157	180	89	97	83	122	33	95
2	124	273	112	106	94	167	183	180	101	97	83	122	33	107

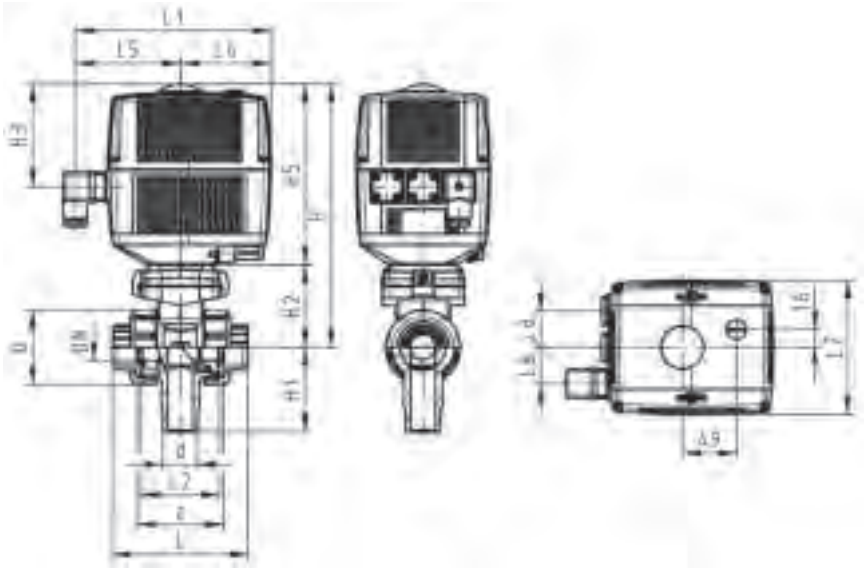



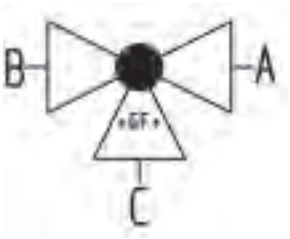

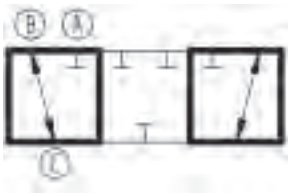

3-Way ball valve type 188 PVC-U OF
Vertical/L-port 24V
With manual emergency override
With solvent cement sockets JIS

Model:

- Vertical inlet solvent cement spigot metric
- Built on with electric actuator EA21
- Voltage 24 V AC/DC
- Control range 180°<)
- Basic position B-C opened, activated position A-C opened, see flow scheme
- Control time 10 s/180°<)
- Easy installation and removal using union on third outlet
- Oil free

Size (inch)	DN (mm)	PN (bar)	kv-value (Δp=1 bar) (l/min)	FPM Code	Weight (kg)
½	15	10	77	**199 188 443**	3.550
¾	20	10	146	**199 188 444**	2.150
1	25	10	260	**199 188 445**	2.267
1 ¼	32	10	437	**199 188 446**	2.554
1 ½	40	10	667	**199 188 447**	2.818
2	50	10	1293	**199 188 448**	3.595

Size (inch)	D (mm)	H (mm)	H1 (mm)	H2 (mm)	H3 (mm)	H5 (mm)	L (mm)	L1 (mm)	L2 (mm)	L5 (mm)	L6 (mm)	L7 (mm)	L8 (mm)	z (mm)
½	50	231	62	64	94	167	95	180	56	97	83	122	33	64
¾	58	240	72	73	94	167	111	180	66	97	83	122	33	74
1	68	240	77	73	94	167	123	180	71	97	83	122	33	79
1 ¼	84	251	87	84	94	167	146	180	85	97	83	122	33	95
1 ½	97	251	97	84	94	167	157	180	89	97	83	122	33	95
2	124	273	112	106	94	167	183	180	101	97	83	122	33	107

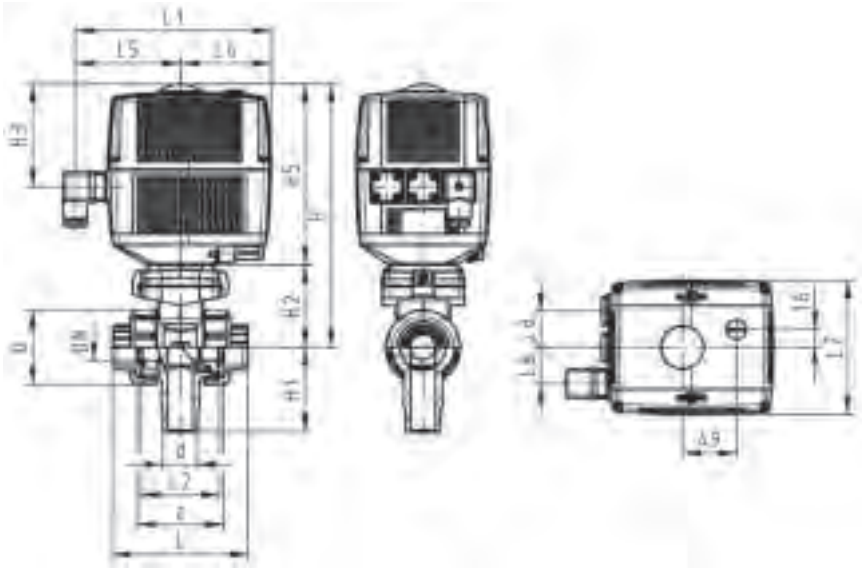



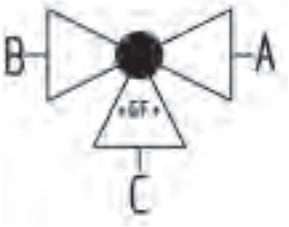

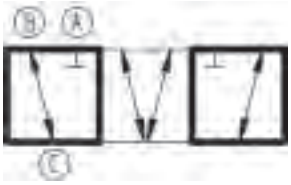

3-Way ball valve type 188 PVC-U OF
Vertical diverter ball 100-230V
With manual emergency override
With solvent cement sockets JIS

Model:

- Vertical inlet solvent cement spigot metric
- Built on with electric actuator EA21
- Voltage 100-230 V, 50-60 Hz
- Control range 180°<)
- Basic position B-C opened, activated position A-C opened, see flow scheme
- Other positions possible by adjusting the limit switches
- Control time 10 s/180°<)
- Easy installation and removal using union on third outlet
- Oil free

Size (inch)	DN (mm)	PN (bar)	kv-value (Δp=1 bar) (l/min)	EPDM Code	Weight (kg)	FPM Code	Weight (kg)
½	15	10	77	**199 188 393**	3.550	**199 188 403**	3.550
¾	20	10	146	**199 188 394**	2.042	**199 188 404**	2.042
1	25	10	260	**199 188 395**	2.148	**199 188 405**	2.148
1 ¼	32	10	437	**199 188 396**	2.260	**199 188 406**	2.260
1 ½	40	10	667	**199 188 397**	2.543	**199 188 407**	2.543
2	50	10	1293	**199 188 398**	2.797	**199 188 408**	2.797

Size (inch)	D (mm)	H (mm)	H1 (mm)	H2 (mm)	H3 (mm)	H5 (mm)	L (mm)	L1 (mm)	L2 (mm)	L5 (mm)	L6 (mm)	L7 (mm)	L8 (mm)	z (mm)
½	50	231	62	64	94	167	95	180	56	97	83	122	33	64
¾	58	240	72	73	94	167	111	180	66	97	83	122	33	74
1	68	240	77	73	94	167	123	180	71	97	83	122	33	79
1 ¼	84	251	87	84	94	167	146	180	85	97	83	122	33	95
1 ½	97	251	97	84	94	167	157	180	89	97	83	122	33	95
2	124	273	112	106	94	167	183	180	101	97	83	122	33	107

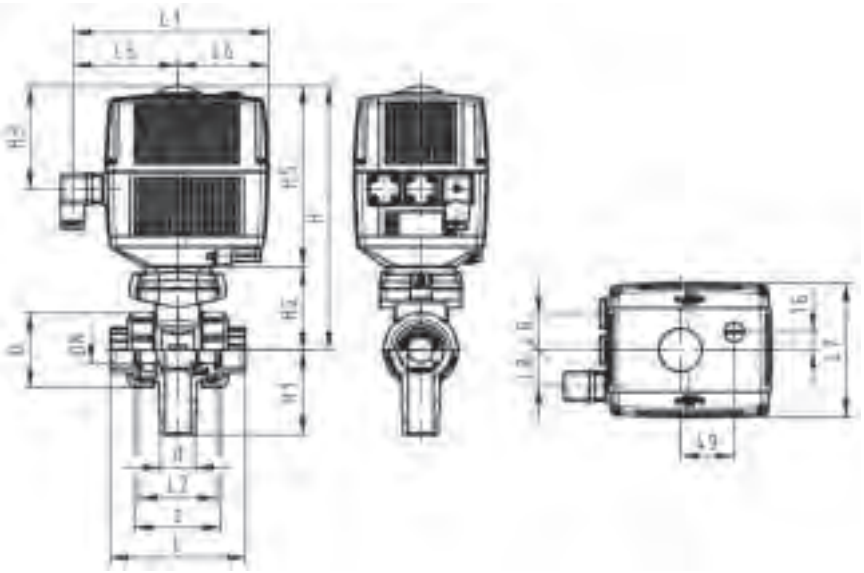

3-Way ball valves pneumatic



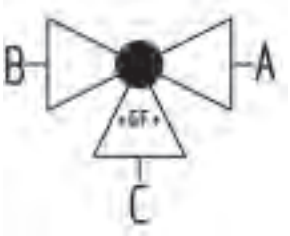

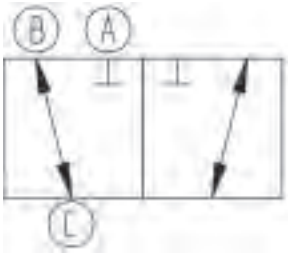

3-Way ball valve type 285 PVC-U OF
Horizontal/L-port
Without manual override
With solvent cement sockets JIS

Model:

- Built on with pneumatic actuator PA11 (DN10/15-25), PA21 (DN32-50)
- Actuator fails safe to the closed position FC
- Basic position B-C opened, activated position A-C opened, see flow scheme
- Control time 90°<) 1-3 s
- For easy installation and removal
- Integrated stainless steel mounting inserts
- Oil free

Size (inch)	DN (mm)	PN (bar)	kv-value (Δp=1 bar) (l/min)	EPDM Code	Weight (kg)	FPM Code	Weight (kg)
½	15	10	75	**199 285 883**	1.121	**199 285 893**	1.121
¾	20	10	150	**199 285 884**	1.249	**199 285 894**	1.249
1	25	10	280	**199 285 885**	1.439	**199 285 895**	1.439
1 ¼	32	10	480	**199 285 886**	2.539	**199 285 896**	2.539
1 ½	40	10	620	**199 285 887**	2.991	**199 285 897**	2.991
2	50	10	1230	**199 285 888**	4.352	**199 285 898**	4.352

Size (inch)	D (mm)	H (mm)	H1 (mm)	H2 (mm)	H3 (mm)	H4 (mm)	H5 (mm)	H6 (mm)	L (mm)	L1 (mm)	L2 (mm)	L3 (mm)	L4 (mm)	L5 (mm)	L6 (mm)
½	50	159	28	62	97	40	77	8	112	194	73	36	25	261	76
¾	58	168	32	71	97	40	77	8	131	194	86	43	25	261	76
1	68	168	36	71	97	40	77	8	151	194	99	50	25	261	76
1 ¼	84	203	45	84	119	51	99	9	181	224	120	60	45	305	95
1 ½	97	203	51	84	119	51	99	9	205	224	137	69	45	305	95
2	124	225	65	106	119	51	99	9	261	224	179	89	45	305	95

Size (inch)	L7 (mm)	M	z (mm)	z1 (mm)
½	48	6	81	40
¾	48	6	94	47
1	48	6	107	54
1 ¼	59	8	130	65
1 ½	59	8	143	72
2	59	8	185	92

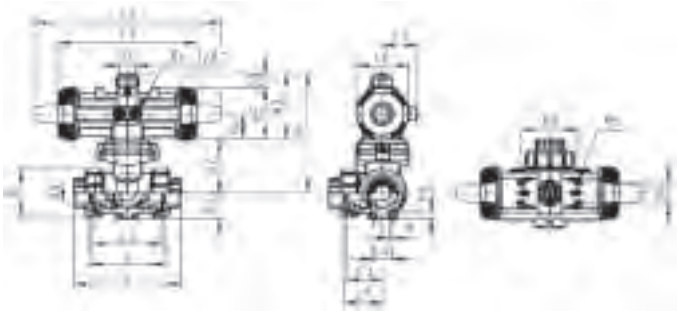



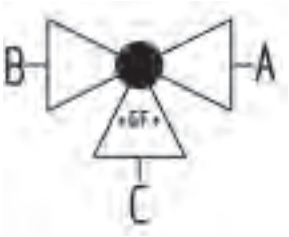

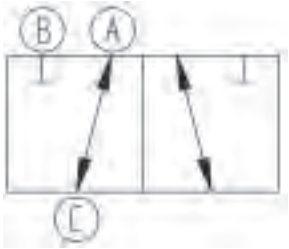

3-Way ball valve type 285 PVC-U OF
Horizontal/L-port DA (Double acting)
Without manual override
With solvent cement sockets JIS

Model:

- Built on with pneumatic actuator PA11 (DN10/15-25), PA21 (DN32-50)
- Basic position A-C opened, activated position B-C opened, see flow scheme
- Control time 90°<) 1-3 s
- For easy installation and removal
- Integrated stainless steel mounting inserts
- Oil free

Size (inch)	DN (mm)	PN (bar)	kv-value (Δp=1 bar) (l/min)	EPDM Code	Weight (kg)	FPM Code	Weight (kg)
½	15	10	75	**199 285 663**	0.931	**199 285 673**	0.931
¾	20	10	150	**199 285 664**	1.059	**199 285 674**	1.059
1	25	10	280	**199 285 665**	1.249	**199 285 675**	1.249
1 ¼	32	10	480	**199 285 666**	2.115	**199 285 676**	2.115
1 ½	40	10	620	**199 285 667**	2.567	**199 285 677**	2.567
2	50	10	1230	**199 285 668**	3.928	**199 285 678**	3.928

Size (inch)	D (mm)	H (mm)	H1 (mm)	H2 (mm)	H3 (mm)	H4 (mm)	H5 (mm)	H6 (mm)	L (mm)	L1 (mm)	L2 (mm)	L3 (mm)	L4 (mm)	L5 (mm)	L6 (mm)
½	50	159	28	62	97	40	77	8	112	194	73	36	25	261	76
¾	58	168	32	71	97	40	77	8	131	194	86	43	25	261	76
1	68	168	36	71	97	40	77	8	151	194	99	50	25	261	76
1 ¼	84	203	45	84	119	51	99	9	181	224	120	60	45	305	95
1 ½	97	203	51	84	119	51	99	9	205	224	137	69	45	305	95
2	124	225	65	106	119	51	99	9	261	224	179	89	45	305	95

Size (inch)	L7 (mm)	M	z (mm)	z1 (mm)
½	48	6	81	40
¾	48	6	94	47
1	48	6	107	54
1 ¼	59	8	130	65
1 ½	59	8	143	72
2	59	8	185	92

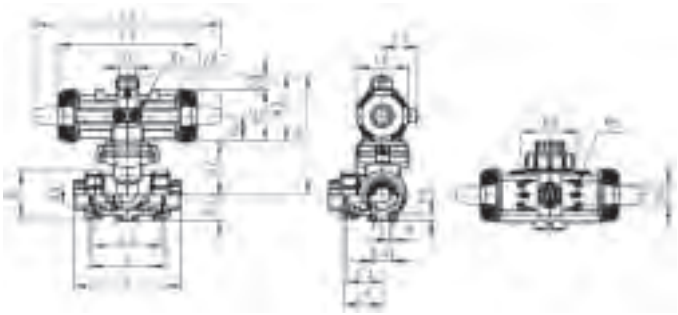



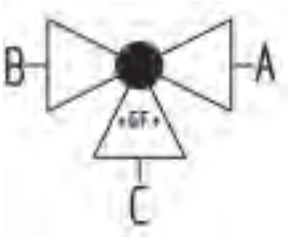

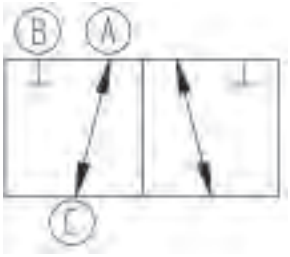

3-Way ball valve type 288 PVC-U OF
Vertical diverter ball
Without manual override
With solvent cement sockets JIS

Model:

- Vertical inlet solvent cement spigot metric
- Built on with pneumatic actuator PA11 (DN10/15-25), PA21 (DN32-50)
- Actuator fails safe to the closed position FC
- Basic position A-C opened, activated position B-C opened, see flow scheme
- Control time 90°<) 1-3 s
- Easy installation and removal using union on third outlet
- Oil free

Size (inch)	DN (mm)	PN (bar)	kv-value (Δp=1 bar) (l/min)	EPDM Code	Weight (kg)	FPM Code	Weight (kg)
½	15	10	77	**199 288 143**	1.035	**199 288 153**	1.035
¾	20	10	146	**199 288 144**	1.141	**199 288 154**	1.141
1	25	10	260	**199 288 145**	1.253	**199 288 155**	1.253
1 ¼	32	10	437	**199 288 146**	2.212	**199 288 156**	2.212
1 ½	40	10	667	**199 288 147**	2.466	**199 288 157**	2.466
2	50	10	1293	**199 288 148**	3.219	**199 288 158**	3.219

Size (inch)	D (mm)	H (mm)	H1 (mm)	H2 (mm)	H3 (mm)	H4 (mm)	H5 (mm)	L (mm)	L1 (mm)	L2 (mm)	L3 (mm)	L4 (mm)	L5 (mm)	z (mm)
½	50	159	62	62	97	40	77	95	194	56	261	76	48	64
¾	58	168	72	71	97	40	77	111	194	66	261	76	48	74
1	68	168	77	71	97	40	77	123	194	71	261	76	48	79
1 ¼	84	203	87	84	119	51	99	146	224	85	305	95	59	95
1 ½	97	203	97	84	119	51	99	157	224	89	305	95	59	95
2	124	225	112	106	119	51	99	183	224	101	305	95	59	107

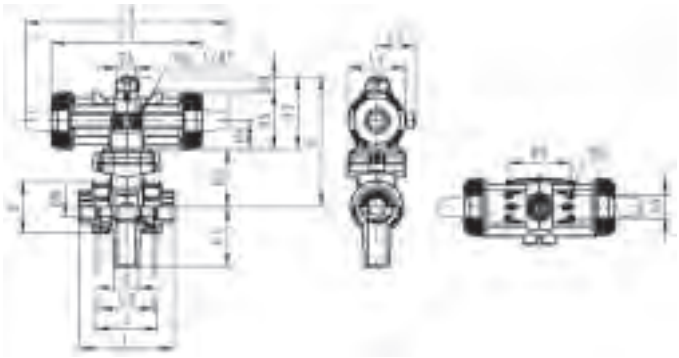

Metering ball valves type 523



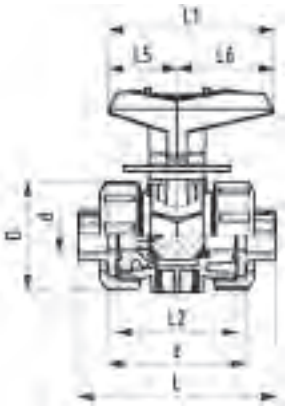

Metering ball valve type 523 PVC-U SF
With mounting inserts
With solvent cement sockets metric

Model:

- Silicone free/paint-compatible
- Micro-doser
- Excellent control characteristics
- Designed for easy installation and removal
- Ball seals PVDF
- Angle of operation 180° with scale
- Integrated stainless steel mounting inserts
- Z-length, end connectors and union nuts **not compatible** to Type 323

Option:

- Other materials on demand

d (mm)	DN (mm)	PN (bar)	kv-value (Δp=1 bar) (l/min)	EPDM Code	Weight (kg)	FPM Code	Weight (kg)
16	10	10	11	**161 523 001**	0.170	**161 523 011**	0.170
20	15	10	20	**161 523 002**	0.170	**161 523 012**	0.170

d (mm)	D (mm)	H (mm)	H1 (mm)	L (mm)	L1 (mm)	L2 (mm)	L4 (mm)	L5 (mm)	L6 (mm)	z (mm)	closest inch (inch)
16	50	68	27	92	77	56	25	32	45	64	⅜
20	50	68	27	95	77	56	25	32	45	64	½





Metering ball valve type 523 PVC-U SF
With mounting inserts
With solvent cement spigots metric

Model:

- Silicone free/paint-compatible
- Micro-doser
- Excellent control characteristics
- Designed for easy installation and removal
- Ball seals PVDF
- Angle of operation 180° with scale
- Integrated stainless steel mounting inserts
- Z-length, end connectors and union nuts **not compatible** to Type 323

Option:

- Other materials on demand

d (mm)	DN (mm)	PN (bar)	kv-value (Δp=1 bar) (l/min)	EPDM Code	Weight (kg)	FPM Code	Weight (kg)
16	10	10	11	**161 523 041**	0.170	**161 523 051**	0.170
20	15	10	20	**161 523 042**	0.170	**161 523 052**	0.170

d (mm)	D (mm)	H (mm)	H1 (mm)	L (mm)	L1 (mm)	L2 (mm)	L3 (mm)	L4 (mm)	L5 (mm)	L6 (mm)	closest inch (inch)
16	50	68	27	114	77	56		25	32	45	⅜
20	50	68	27	124	77	56	130	25	32	45	½



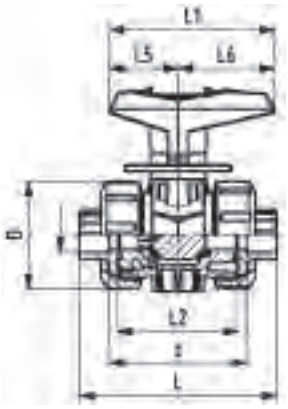

Metering ball valve type 523 PVC-U OF
With mounting inserts
With solvent cement sockets JIS

Model:

- Oil free
- Micro-doser
- Excellent control characteristics
- Designed for easy installation and removal
- Ball seals PTFE
- Angle of operation 180° with scale
- Integrated stainless steel mounting inserts
- Z-length, end connectors and union nuts **not compatible** to Type 323

Option:

- Other materials on demand

Size (inch)	DN (mm)	PN (bar)	kv-value (Δp=1 bar) (l/min)	EPDM Code	Weight (kg)	FPM Code	Weight (kg)
½	15	10	20	**161 523 582**	0.170	**161 523 592**	0.170

Size (inch)	D (mm)	H (mm)	H1 (mm)	L (mm)	L1 (mm)	L2 (mm)	L4 (mm)	L5 (mm)	L6 (mm)	z (mm)
½	50	68	27	95	77	56	25	32	45	64

Diaphragm valves





Diaphragm valve type 514 PVC-U SF
With solvent cement sockets metric

Model:

- Silicone free/paint-compatible
- Double flow rate compared to predecessor
- One housing nut replaces four screws
- Handwheel with built-in locking mechanism
- For easy installation and removal
- Short overall length

Option:

- Individual configuration of the valve (see diagram)
- Self adjusting multifunctional module with integrated limit switches
- PN16 available as a configuration

d (mm)	DN (mm)	PN (bar)	kv-value (Δp=1 bar) (l/min)	EPDM Code	Weight (kg)	PTFE/EPDM Code	Weight (kg)
16	10	10	125	**161 514 021**	0.398	**161 514 071**	0.408
20	15	10	125	**161 514 022**	0.299	**161 514 072**	0.408
25	20	10	271	**161 514 023**	0.527	**161 514 073**	0.538
32	25	10	481	**161 514 024**	1.161	**161 514 074**	1.181
40	32	10	759	**161 514 025**	0.945	**161 514 075**	1.447
50	40	10	1263	**161 514 026**	2.516	**161 514 076**	2.546
63	50	10	1728	**161 514 027**	3.385	**161 514 077**	3.413

d (mm)	D (mm)	D2 (mm)	D3 (mm)	H (mm)	H1 (mm)	H2 (mm)	L (mm)	L2 (mm)	M	z (mm)	Lift = Hx (mm)	closest inch (inch)
16	65	65	43	73	14	12	124	25	M6	96	7	⅜
20	65	65	43	73	14	12	128	25	M6	96	7	½
25	80	65	51	81	18	12	152	25	M6	114	10	¾
32	88	87	58	107	22	12	166	25	M6	122	13	1
40	101	87	72	115	26	15	192	45	M8	140	15	1 ¼
50	117	135	83	148	32	15	222	45	M8	160	19	1 ½
63	144	135	100	166	39	15	266	45	M8	190	25	2





Diaphragm valve type 514 PVC-U SF
With solvent cement sockets BS

Model:

- Silicone free/paint-compatible
- Double flow rate compared to predecessor
- One housing nut replaces four screws
- Handwheel with built-in locking mechanism
- For easy installation and removal
- Short overall length

Option:

- Individual configuration of the valve (see diagram)
- Self adjusting multifunctional module with integrated limit switches
- PN16 available as a configuration

Size (inch)	**DN** (mm)	**PN** (bar)	**kv-value (Δp=1 bar)** (l/min)	**EPDM Code**	**Weight** (kg)	**PTFE/EPDM Code**	**Weight** (kg)
½	15	10	125	**161 514 522**	0.396	**161 514 572**	0.406
¾	20	10	271	**161 514 523**	0.524	**161 514 573**	0.536
1	25	10	481	**161 514 524**	1.159	**161 514 574**	1.179
1 ¼	32	10	759	**161 514 525**	1.419	**161 514 575**	1.439
1 ½	40	10	1263	**161 514 526**	2.528	**161 514 576**	2.558
2	50	10	1728	**161 514 527**	3.409	**161 514 577**	3.437

Size (inch)	**D** (mm)	**D2** (mm)	**D3** (mm)	**H** (mm)	**H1** (mm)	**H2** (mm)	**L** (mm)	**L2** (mm)	**M**	**z** (mm)	**Lift = Hx** (mm)
½	65	65	43	73	14	12	141	25	M6	96	7
¾	80	65	51	81	18	12	165	25	M6	114	10
1	88	87	58	107	22	12	179	25	M6	122	13
1 ¼	101	87	72	115	26	15	204	45	M8	140	15
1 ½	117	135	83	148	32	15	230	45	M8	160	19
2	144	135	100	166	39	15	268	45	M8	190	25





Diaphragm valve type 514 PVC-U SF
With threaded sockets Rp

Model:

- Silicone free/paint-compatible
- Double flow rate compared to predecessor
- One housing nut replaces four screws
- Handwheel with built-in locking mechanism
- For easy installation and removal
- Short overall length

Option:

- Individual configuration of the valve (see diagram)
- Self adjusting multifunctional module with integrated limit switches
- PN16 available as a configuration

Rp (inch)	DN (mm)	PN (bar)	kv-value (Δp=1 bar) (l/min)	EPDM Code	Weight (kg)	PTFE/EPDM Code	Weight (kg)
½	15	10	125	**161 514 422**	0.400	**161 514 472**	0.410
¾	20	10	271	**161 514 423**	0.523	**161 514 473**	0.534
1	25	10	481	**161 514 424**	1.163	**161 514 474**	1.183
1 ¼	32	10	759	**161 514 425**	1.429	**161 514 475**	1.449
1 ½	40	10	1263	**161 514 426**	2.528	**161 514 476**	2.558
2	50	10	1728	**161 514 427**	3.449	**161 514 477**	3.477

Rp (inch)	D (mm)	D2 (mm)	D3 (mm)	H (mm)	H1 (mm)	H2 (mm)	L (mm)	L2 (mm)	M	z (mm)	Lift = Hx (mm)
½	65	65	43	73	14	12	128	25	M6	96	7
¾	80	65	51	81	18	12	152	25	M6	114	10
1	88	87	58	107	22	12	166	25	M6	122	13
1 ¼	101	87	72	115	26	15	192	45	M8	140	15
1 ½	117	135	83	148	32	15	222	45	M8	160	19
2	144	135	100	166	39	15	266	45	M8	190	25





Diaphragm valve type 514 PVC-U OF
With solvent cement sockets JIS

Model:

- Oil free
- Double flow rate compared to predecessor
- One housing nut replaces four screws
- Handwheel with built-in locking mechanism
- For easy installation and removal
- Short overall length

Option:

- Individual configuration of the valve (see diagram)
- Self adjusting multifunctional module with integrated limit switches
- PN16 available as a configuration

Size (inch)	DN (mm)	PN (bar)	kv-value (Δp=1 bar) (l/min)	EPDM Code	Weight (kg)	PTFE/EPDM Code	Weight (kg)
½	15	10	125	**161 514 822**	0.434	**161 514 872**	0.548
¾	20	10	271	**161 514 823**	0.527	**161 514 873**	0.538
1	25	10	481	**161 514 824**	0.678	**161 514 874**	1.183
1 ¼	32	10	759	**161 514 825**	1.437	**161 514 875**	1.457
1 ½	40	10	1263	**161 514 826**	2.558	**161 514 876**	2.588
2	50	10	1728	**161 514 827**	3.425	**161 514 877**	3.453

table continued on the next page

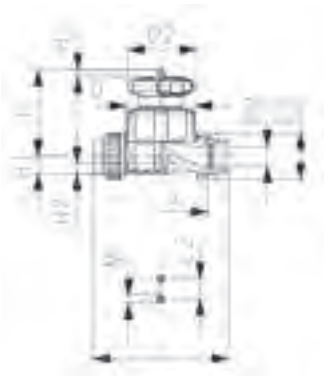

Size (inch)	D (mm)	D2 (mm)	D3 (mm)	H (mm)	H1 (mm)	H2 (mm)	L (mm)	L2 (mm)	M	z (mm)	Lift = Hx (mm)
½	80	65	51	81	18	12	152	25	M6	120	10
¾	80	65	51	81	18	12	152	25	M6	114	10
1	88	87	58	107	22	12	166	25	M6	122	13
1 ¼	101	87	72	115	26	15	192	45	M8	140	15
1 ½	117	135	83	148	32	15	222	45	M8	160	19
2	144	135	100	166	39	15	266	45	M8	190	25





Diaphragm valve type 514 PVC-U OF
With threaded sockets Rc

Model:

- Oil free
- Double flow rate compared to predecessor
- One housing nut replaces four screws
- Handwheel with built-in locking mechanism
- For easy installation and removal
- Short overall length

Option:

- Individual configuration of the valve (see diagram)
- Self adjusting multifunctional module with integrated limit switches
- PN16 available as a configuration

Rc (inch)	DN (mm)	PN (bar)	kv-value (Δp=1 bar) (l/min)	EPDM Code	Weight (kg)	PTFE/EPDM Code	Weight (kg)
½	15	10	125	**161 514 922**	0.537	**161 514 972**	0.548
¾	20	10	271	**161 514 923**	0.529	**161 514 973**	0.540
1	25	10	481	**161 514 924**	1.165	**161 514 974**	1.185
1 ¼	32	10	759	**161 514 925**	1.433	**161 514 975**	1.453
1 ½	40	10	1263	**161 514 926**	2.556	**161 514 976**	2.586
2	50	10	1728	**161 514 927**	3.497	**161 514 977**	3.525

Rc (inch)	D (mm)	D2 (mm)	D3 (mm)	H (mm)	H1 (mm)	H2 (mm)	L (mm)	L2 (mm)	M	z (mm)	Lift = Hx (mm)
½	80	65	51	81	18	12	152	25	M6	120	110
¾	80	65	51	81	18	12	152	25	M6	114	10
1	88	87	58	107	22	12	166	25	M6	122	13
1 ¼	101	87	72	115	26	15	192	45	M8	140	15
1 ½	117	135	83	148	32	15	222	45	M8	160	19
2	144	135	100	166	39	15	266	45	M8	190	25



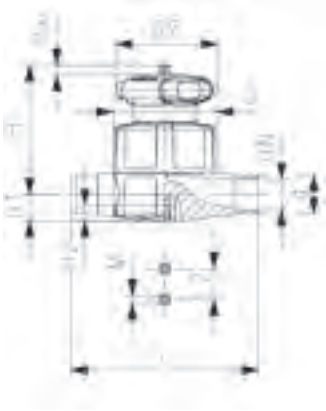

Diaphragm valve type 515 PVC-U SF
With solvent cement spigots metric

Model:

- Silicone free/paint-compatible
- Double flow rate compared to predecessor
- One housing nut replaces four screws
- Handwheel with built-in locking mechanism
- Overall length EN 558

Option:

- Individual configuration of the valve (see diagram)
- Self adjusting multifunctional module with integrated limit switches
- PN16 available as a configuration

d (mm)	DN (mm)	PN (bar)	kv-value (Δp=1 bar) (l/min)	EPDM Code	Weight (kg)	PTFE/EPDM Code	Weight (kg)
20	15	10	125	**161 515 022**	0.238	**161 515 072**	0.345
25	20	10	271	**161 515 023**	0.444	**161 515 073**	0.456
32	25	10	481	**161 515 024**	1.032	**161 515 074**	1.052
40	32	10	759	**161 515 025**	1.237	**161 515 075**	1.257
50	40	10	1263	**161 515 026**	2.262	**161 515 076**	2.292
63	50	10	1728	**161 515 027**	2.057	**161 515 077**	2.991

d (mm)	D (mm)	D2 (mm)	H (mm)	H1 (mm)	H2 (mm)	L (mm)	L2 (mm)	M	Lift = Hx (mm)	closest inch (inch)
20	65	65	73	14	12	124	25	M6	7	½
25	80	65	81	18	12	144	25	M6	10	¾
32	88	87	107	22	12	154	25	M6	13	1
40	101	87	115	26	15	174	45	M8	15	1 ¼
50	117	135	148	32	15	194	45	M8	19	1 ½
63	144	135	166	39	15	224	45	M8	25	2





Diaphragm valve type 517 PVC-U SF
With backing flanges PVC-U metric

Model:

- Silicone free/paint-compatible
- Double flow rate compared to predecessor
- One housing nut replaces four screws
- Handwheel with built-in locking mechanism
- Flat sealing faces
- Overall length EN 558
- Connecting dimension: ISO 7005 PN 10, EN 1092 PN 10, DIN 2501 PN 10, BS 4504 PN 10

Option:

- Individual configuration of the valve (see diagram)
- Self adjusting multifunctional module with integrated limit switches

d (mm)	DN (mm)	PN (bar)	kv-value (Δp=1 bar) (l/min)	EPDM Code	Weight (kg)	PTFE/EPDM Code	Weight (kg)
20	15	10	125	**161 517 022**	0.493	**161 517 072**	0.503
25	20	10	271	**161 517 023**	0.661	**161 517 073**	0.672
32	25	10	481	**161 517 024**	1.344	**161 517 074**	1.364
40	32	10	759	**161 517 025**	1.233	**161 517 075**	1.372
50	40	10	1263	**161 517 026**	2.868	**161 517 076**	2.898
63	50	10	1728	**161 517 027**	2.904	**161 517 077**	3.817

table continued on the next page



d (mm)	D (mm)	D2 (mm)	D3 (mm)	D4 (mm)	D5 (mm)	H (mm)	H1 (mm)	H2 (mm)	L (mm)	L2 (mm)	M	Lift = Hx (mm)	closest inch (inch)
20	65	65	95	65	14	73	14	12	130	25	M6	7	½
25	80	65	105	75	14	81	18	12	150	25	M6	10	¾
32	88	87	115	85	14	107	22	12	160	25	M6	13	1
40	101	87	140	100	18	115	26	15	180	45	M8	15	1 ¼
50	117	135	150	110	18	148	32	15	200	45	M8	19	1 ½
63	144	135	165	125	18	166	39	15	230	45	M8	25	2



Diaphragm valve type 517 PVC-U OF
With fixed flanges PVC-U JIS

Model:

- Oil free
- Double flow rate compared to predecessor
- One housing nut replaces four screws
- Handwheel with built-in locking mechanism
- Joining faces flat/serrated
- Overall length EN 558
- Connecting dimension: JIS B2238/39 10K

Option:

- Individual configuration of the valve (see diagram)
- Self adjusting multifunctional module with integrated limit switches

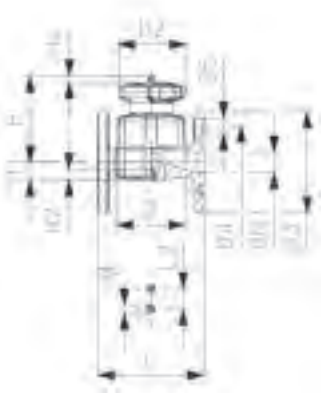

Size (inch)	DN (mm)	PN (bar)	kv-value (Δp=1 bar) (l/min)	EPDM Code	Weight (kg)	PTFE/EPDM Code	Weight (kg)
½	15	10	125	**161 517 922**	0.528	**161 517 972**	0.538
¾	20	10	271	**161 517 923**	0.626	**161 517 973**	0.637
1	25	10	481	**161 517 924**	1.334	**161 517 974**	1.354
1 ¼	32	10	759	**161 517 925**	1.745	**161 517 975**	1.765
1 ½	40	10	1263	**161 517 926**	2.814	**161 517 976**	2.844
2	50	10	1728	**161 517 927**	3.652	**161 517 977**	3.680

Size (inch)	D (mm)	D2 (mm)	D3 (mm)	D4 (mm)	D5 (mm)	H (mm)	H1 (mm)	H2 (mm)	L (mm)	L2 (mm)	M	Lift = Hx (mm)
½	65	65	95	70	15	73	14	12	110	25	M6	7
¾	80	65	100	75	15	81	18	12	120	25	M6	10
1	88	87	125	90	19	107	22	12	130	25	M6	13
1 ¼	101	87	135	100	19	115	26	15	180	45	M8	15
1 ½	117	135	140	105	19	148	32	15	180	45	M8	19
2	144	135	155	120	19	166	39	15	210	45	M8	25





Diaphragm valve type 317 PVC-U SF
With flanges PVC-U metric

Model:

- Silicone free/paint-compatible
- Flat sealing faces
- Overall length according to EN 558
- Connecting dimension: ISO 7005 PN 10, EN 1092 PN 10, DIN 2501 PN 10, BS 4504 PN 10

Option:

- Handwheel lockable DN15-65 (basic version not lockable)

d (mm)	Size (inch)	DN (mm)	PN (bar)	kv-value (Δp=1 bar) (l/min)	EPDM Code	PTFE with EPDM supp. diaphragm Code	Weight (kg)
75	2 ½	65	10	992	**161 317 723**	**161 317 738**	4.420
90	3	80	10	1700	**161 317 424**	**161 317 439**	9.600
110	4	100	10	2700	**161 317 425**	**161 317 440**	13.360
160	6	150	7	6033	**161 317 427**	**161 317 442**	29.250

d (mm)	D (mm)	D1 (mm)	D2 (mm)	D3 (mm)	H (mm)	H1 (mm)	H2 (mm)	L (mm)	L1 (mm)	L2 (mm)	L3 (mm)	M	Lift = Hx (mm)	AL
75	185	145	152	18	201	46	15	290		70		M8	30	4
90	200	160	270	18	265	57	23	310	35	120		M12	40	8
110	225	180	270	18	304	69	23	350	35	120		M12	50	8
160	285	240	400	23	437	108	23	480	26	100	200	M12	70	8



Diaphragm valves pneumatic

DIASTAR Six





Diaphragm valve DIASTAR Six PVC-U SF
FC (Fail safe to close)
With fixed flanges PVC-U JIS

Model:

- Silicone free/paint-compatible
- Double flow rate compared to predecessor
- One housing nut replaces four screws
- Rotating air connection at 90° intervals
- Joining faces flat/serrated
- Connecting dimension: JIS B2238/39 10K

Option:

- Individual configuration of the valve (see diagram)

Size (inch)	DN (mm)	PN (bar)	kv-value (Δp=1 bar) (l/min)	EPDM Code	Weight (kg)
½	15	6	125	**161 617 922**	0.696
¾	20	6	271	**161 617 923**	1.145
1	25	6	481	**161 617 924**	1.448
1 ¼	32	6	759	**161 617 925**	2.384
1 ½	40	6	960	**161 617 926**	2.964
2	50	6	1181	**161 617 927**	4.029

Size (inch)	D (mm)	D1_G (inch)	D3 (mm)	D4 (mm)	D5 (mm)	H (mm)	H1 (mm)	H2 (mm)	H3 (mm)	H7 (mm)	L (mm)	L2 (mm)	M	Lift = Hx (mm)
½	68	⅛	95	70	15	101	14	12	60	43	110	25	M6	7
¾	96	⅛	100	75	15	132	18	12	73	57	120	25	M6	10
1	96	⅛	125	90	15	143	22	12	84	57	130	25	M6	13
1 ¼	120	⅛	135	100	19	173	26	15	99	69	180	45	M6	14
1 ½	120	⅛	140	105	19	193	32	15	119	69	180	45	M6	16
2	120	⅛	155	120	19	205	39	15	132	69	210	45	M6	16

DIASTAR Ten





Diaphragm valve DIASTAR Ten PVC-U SF
FC (Fail safe to close)
With fixed flanges PVC-U JIS

Model:

- Silicone free/paint-compatible
- Double flow rate compared to predecessor
- One housing nut replaces four screws
- Rotating air connection at 90° intervals
- Joining faces flat/serrated
- Connecting dimension: JIS B2238/39 10K

Option:

- Individual configuration of the valve (see diagram)
- Comprehensive range of accessories available

* PN: PTFE
Working Pressure: **one side**

Size (inch)	DN (mm)	PN* (bar)	kv-value (Δp=1 bar) (l/min)	EPDM Code	Weight (kg)	PTFE/EPDM Code	Weight (kg)
½	15	10/10*	125	**161 627 922**	0.722	**161 627 972**	0.732
¾	20	10/10*	271	**161 627 923**	1.220	**161 627 973**	1.231
1	25	10/10*	481	**161 627 924**	1.520	**161 627 974**	1.540
1 ¼	32	10/10*	759	**161 627 925**	2.534	**161 627 975**	2.554
1 ½	40	10/10*	1263	**161 627 926**	4.102	**161 627 976**	4.132
2	50	10/6*	1728	**161 627 927**	4.950	**161 627 977**	4.978

Size (inch)	D (mm)	D1_G (inch)	D3 (mm)	D4 (mm)	D5 (mm)	H (mm)	H1 (mm)	H2 (mm)	H3 (mm)	H4 (mm)	H5 (mm)	H7 (mm)	L (mm)	L2 (mm)	M
½	68	⅛	95	70	15	101	14	12	60	24	16	43	110	25	M6
¾	96	⅛	100	75	15	132	18	12	73	25	16	57	120	25	M6
1	96	⅛	125	90	19	143	22	12	84	25	16	57	130	25	M6
1 ¼	120	⅛	135	100	19	173	26	15	99	26	26	69	180	45	M8
1 ½	150	¼	140	105	19	193	32	15	119	36	26	88	180	45	M8
2	150	¼	155	120	19	205	39	15	132	36	26	88	210	45	M8

Size (inch)	Lift = Hx (mm)
½	7
¾	10
1	13
1 ¼	15
1 ½	19
2	23



Diaphragm valve DIASTAR Ten PVC-U SF
FO (Fail safe to open)
With fixed flanges PVC-U JIS

Model:

- Silicone free/paint-compatible
- Double flow rate compared to predecessor
- One housing nut replaces four screws
- Rotating air connection at 90° intervals
- Joining faces flat/serrated
- Connecting dimension: JIS B2238/39 10K

Option:

- Individual configuration of the valve (see diagram)
- Comprehensive range of accessories available

* PN: PTFE
Working Pressure: **one side**



Size (inch)	DN (mm)	PN* (bar)	kv-value (Δp=1 bar) (l/min)	EPDM Code	Weight (kg)	PTFE/EPDM Code	Weight (kg)
½	15	10/10*	125	**161 647 922**	0.672	**161 647 972**	0.682
¾	20	10/10*	271	**161 647 923**	1.046	**161 647 973**	1.057
1	25	10/10*	481	**161 647 924**	1.340	**161 647 974**	1.360
1 ¼	32	10/10*	759	**161 647 925**	2.174	**161 647 975**	2.194
1 ½	40	10/10*	1263	**161 647 926**	4.012	**161 647 976**	4.042
2	50	10/10*	1728	**161 647 927**	4.860	**161 647 977**	4.888

Size (inch)	D (mm)	D1_G (inch)	D3 (mm)	D4 (mm)	D5 (mm)	H (mm)	H1 (mm)	H2 (mm)	H3 (mm)	H4 (mm)	H5 (mm)	H7 (mm)	L (mm)	L2 (mm)	M
½	68	⅛	95	70	15	101	14	12	60	24	16	43	110	25	M6
¾	96	⅛	100	75	15	132	18	12	73	25	16	57	120	25	M6
1	96	⅛	125	90	19	143	22	12	84	25	16	57	130	25	M6
1 ¼	120	⅛	135	100	19	173	26	15	99	26	26	69	180	45	M8
1 ½	150	¼	140	105	19	214	32	15	119	36	26	88	180	45	M8
2	150	¼	155	120	19	226	39	15	132	36	26	88	210	45	M8

Size (inch)	Lift = Hx (mm)
½	7
¾	10
1	13
1 ¼	15
1 ½	19
2	23



Diaphragm valve DIASTAR Ten PVC-U SF
DA (Double acting)
With fixed flanges PVC-U JIS

Model:

- Silicone free/paint-compatible
- Double flow rate compared to predecessor
- One housing nut replaces four screws
- Rotating air connection at 90° intervals
- Joining faces flat/serrated
- Connecting dimension: JIS B2238/39 10K

Option:

- Individual configuration of the valve (see diagram)
- Comprehensive range of accessories available

* PN: PTFE
Working Pressure: **one side**



Size (inch)	DN (mm)	PN* (bar)	kv-value (Δp=1 bar) (l/min)	EPDM Code	Weight (kg)	PTFE/EPDM Code	Weight (kg)
½	15	10/10*	125	**161 657 922**	0.656	**161 657 972**	0.666
¾	20	10/10*	271	**161 657 923**	1.010	**161 657 973**	1.021
1	25	10/10*	481	**161 657 924**	1.310	**161 657 974**	1.330
1 ¼	32	10/10*	759	**161 657 925**	2.114	**161 657 975**	2.134
1 ½	40	10/10*	1263	**161 657 926**	3.262	**161 657 976**	3.292
2	50	10/10*	1728	**161 657 927**	4.110	**161 657 977**	4.138

Size (inch)	D (mm)	D1_G (inch)	D3 (mm)	D4 (mm)	D5 (mm)	H (mm)	H1 (mm)	H2 (mm)	H3 (mm)	H4 (mm)	H5 (mm)	H7 (mm)	L (mm)	L2 (mm)	M
½	68	⅛	95	70	15	101	14	12	60	24	16	43	110	25	M6
¾	96	⅛	100	75	15	132	18	12	73	25	16	57	120	25	M6
1	96	⅛	125	90	19	143	22	12	84	25	16	57	130	25	M6
1 ¼	120	⅛	135	100	19	173	26	15	99	26	26	69	180	45	M8
1 ½	150	¼	140	105	19	214	32	15	119	36	26	88	180	45	M8
2	150	¼	155	120	19	226	39	15	132	36	26	88	210	45	M8

Size (inch)	Lift = Hx (mm)
½	7
¾	10
1	13
1 ¼	15
1 ½	19
2	23

DIASTAR TenPlus





Diaphragm valve DIASTAR TenPlus PVC-U OF FC (Fail safe to close) low pressure
Unions with solvent cement sockets JIS

Model:

- Double flow rate compared to predecessor
- One housing nut replaces four screws
- Rotating air connection at 90° intervals
- For easy installation and removal
- Oil free
- Short overall length

Option:

- Individual configuration of the valve (see diagram)
- Comprehensive range of accessories available
- PN16 available as a configuration

* PN: PTFE
Working Pressure: **both sides**

Size (inch)	DN (mm)	PN* (bar)	kv-value (Δp=1 bar) (l/min)	EPDM Code	Weight (kg)	PTFE/EPDM Code	Weight (kg)
½	15	10/8*	125	**161 684 822**	1.131	**161 684 872**	1.142
¾	20	10/8*	271	**161 684 823**	1.121	**161 684 873**	1.132
1	25	10/8*	481	**161 684 824**	2.046	**161 684 874**	1.963
1 ¼	32	10/8*	759	**161 684 825**	3.296	**161 684 875**	3.316
1 ½	40	10/8*	1263	**161 684 826**	5.254	**161 684 876**	5.284
2	50	10/6*	1728	**161 684 827**	6.130	**161 684 877**	6.158

Size (inch)	D (mm)	D1_G (inch)	H (mm)	H1 (mm)	H2 (mm)	H3 (mm)	H4 (mm)	H5 (mm)	H7 (mm)	L (mm)	L2 (mm)	M	z (mm)	Lift = Hx (mm)
½	96	⅛	132	18	12	73	25	16	57	152	25	M6	120	10
¾	96	⅛	132	18	12	73	25	16	57	152	25	M6	114	10
1	120	⅛	167	22	12	93	26	26	69	166	25	M6	122	13
1 ¼	150	¼	196	26	15	101	36	26	88	192	45	M8	140	15
1 ½	180	¼	239	32	15	124	37	26	103	222	45	M8	160	19
2	180	¼	251	39	15	137	37	26	103	266	45	M8	190	23





Diaphragm valve DIASTAR TenPlus PVC-U OF FC (Fail safe to close) low pressure Unions with threaded sockets Rc

Model:

- Double flow rate compared to predecessor
- One housing nut replaces four screws
- Rotating air connection at 90° intervals
- For easy installation and removal
- Oil free
- Short overall length

Option:

- Individual configuration of the valve (see diagram)
- Comprehensive range of accessories available
- PN16 available as a configuration

* PN: PTFE

Working Pressure: **both sides**

Rc (inch)	DN (mm)	PN* (bar)	kv-value (Δp=1 bar) (l/min)	EPDM Code	Weight (kg)	PTFE/EPDM Code	Weight (kg)
½	15	10/8*	125	**161 684 922**	1.131	**161 684 972**	1.142
¾	20	10/8*	271	**161 684 923**	1.123	**161 684 973**	1.134
1	25	10/8*	481	**161 684 924**	1.945	**161 684 974**	1.965
1 ¼	32	10/8*	759	**161 684 925**	3.292	**161 684 975**	3.312
1 ½	40	10/8*	1263	**161 684 926**	5.252	**161 684 976**	5.282
2	50	10/6*	1728	**161 684 927**	6.202	**161 684 977**	6.230

Rc (inch)	D (mm)	D1_G (inch)	H (mm)	H1 (mm)	H2 (mm)	H3 (mm)	H4 (mm)	H5 (mm)	H7 (mm)	L (mm)	L2 (mm)	M	z (mm)	Lift = Hx (mm)
½	96	⅛	132	18	12	73	25	16	57	152	25	M6	120	10
¾	96	⅛	132	18	12	73	25	16	57	152	25	M6	114	10
1	120	⅛	167	22	12	93	26	26	69	166	25	M6	122	13
1 ¼	150	¼	196	26	15	101	36	26	88	192	45	M8	140	15
1 ½	180	¼	239	32	15	124	37	26	103	222	45	M8	160	19
2	180	¼	251	39	15	137	37	26	103	266	45	M8	190	23



Diaphragm valve DIASTAR TenPlus PVC-U OF
FC (Fail safe to close) low pressure
With fixed flanges PVC-U JIS

Model:

- Double flow rate compared to predecessor
- One housing nut replaces four screws
- Rotating air connection at 90° intervals
- Joining faces flat/serrated
- Oil free
- Connecting dimension: JIS B2238/39 10K

Option:

- Individual configuration of the valve (see diagram)
- Comprehensive range of accessories available

* PN: PTFE
Working Pressure: **both sides**



Size (inch)	DN (mm)	PN* (bar)	kv-value (Δp=1 bar) (l/min)	EPDM Code	Weight (kg)	PTFE/EPDM Code	Weight (kg)
½	15	10/8*	125	**161 687 922**	1.122	**161 687 972**	1.132
¾	20	10/8*	271	**161 687 923**	1.220	**161 687 973**	1.231
1	25	10/8*	481	**161 687 924**	2.114	**161 687 974**	2.134
1 ¼	32	10/8*	759	**161 687 925**	3.604	**161 687 975**	3.624
1 ½	40	10/8*	1263	**161 687 926**	5.510	**161 687 976**	5.540
2	50	10/6*	1728	**161 687 927**	6.357	**161 687 977**	6.385

Size (inch)	D (mm)	D1_G (inch)	D3 (mm)	D4 (mm)	D5 (mm)	H (mm)	H1 (mm)	H2 (mm)	H3 (mm)	H4 (mm)	H5 (mm)	H7 (mm)	L (mm)	L2 (mm)	M
½	96	⅛	95	70	15	127	14	12	68	25	16	57	110	25	M6
¾	96	⅛	100	75	15	132	18	12	73	25	16	57	120	25	M6
1	120	⅛	125	90	19	167	22	12	93	26	26	69	130	25	M6
1 ¼	150	¼	135	100	19	196	26	15	101	36	26	88	180	45	M8
1 ½	180	¼	140	105	19	239	32	15	124	37	26	103	180	45	M8
2	180	¼	155	120	19	251	39	15	137	37	26	103	210	45	M8

Size (inch)	Lift = Hx (mm)
½	7
¾	10
1	13
1 ¼	15
1 ½	19
2	23

Butterfly valves type 567



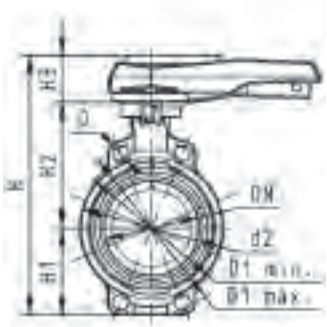

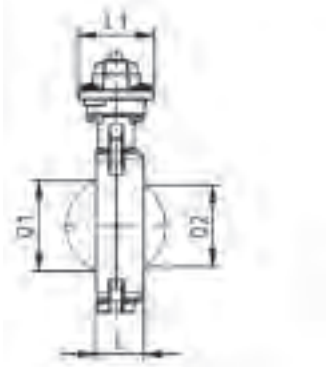

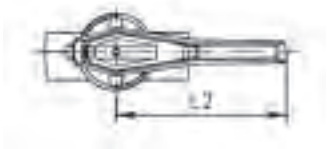

Butterfly valve type 567 PVC-U SF
Hand lever with ratchet settings

Model:

- Silicone free/paint-compatible
- Overall length according to EN 558, ISO 5752
- Connecting dimension: ISO 7005 PN 10, EN 1092 PN 10, DIN 2501 PN 10, ANSI/ASME B 16.5 Class 150, BS 1560: 1989, BS 4504, JIS B 2220

d (mm)	Size (inch)	DN (mm)	PN (bar)	kv-value (Δp=1 bar) (l/min)	EPDM Code	Weight (kg)	FPM Code	Weight (kg)
63	2	50	10	1470	**161 567 402**	1.040	**161 567 422**	1.044
75	2 ½	65	10	2200	**161 567 403**	1.350	**161 567 423**	1.148
90	3	80	10	3000	**161 567 404**	1.517	**161 567 424**	1.315
110	4	100	10	6500	**161 567 405**	2.528	**161 567 425**	1.983
140	5	125	10	11500	**161 567 406**	2.536	**161 567 426**	3.339
160	6	150	10	16600	**161 567 407**	3.541	**161 567 427**	3.564
225	8	200	10	39600	**161 567 408**	5.513	**161 567 428**	5.541

d (mm)	d2 (mm)	D (mm)	D1 min. (mm)	D1 max. (mm)	H (mm)	H1 (mm)	H2 (mm)	H3 (mm)	L (mm)	L1 (mm)	L2 (mm)	Q1 (mm)	Q2 (mm)
63	104	19	120	125	264	77	134	54	45	106	205	40	
75	115	19	140	145	277	83	140	54	46	106	205	54	35
90	131	19	150	160	289	89	146	54	49	106	205	67	50
110	161	19	175	191	325	104	167	55	56	106	255	88	74
140	187	23	210	216	352	117	181	55	64	106	255	113	97
160	215	24	241	241	373	130	189	55	72	106	255	139	123
225	267	23	290	295	435	158	210	67	73	140	408	178	169



Butterfly valve type 567 PVC-U OF
Hand lever with ratchet settings

Model:

- Oil free
- Overall length according to EN 558, ISO 5752
- Connecting dimension: ISO 7005 PN 10, EN 1092 PN 10, DIN 2501 PN 10, ANSI/ASME B 16.5 Class 150, BS 1560: 1989, BS 4504, JIS B 2220

d (mm)	Size (inch)	DN (mm)	PN (bar)	kv-value (Δp=1 bar) (l/min)	EPDM Code	Weight (kg)
63	2	50	10	1470	**161 567 502**	1.040
75	2 ½	65	10	2200	**161 567 503**	1.344
90	3	80	10	3000	**161 567 504**	1.308
110	4	100	10	6500	**161 567 505**	1.969
140	5	125	10	11500	**161 567 506**	2.536
160	6	150	10	16600	**161 567 507**	3.731
225	8	200	10	39600	**161 567 508**	5.513

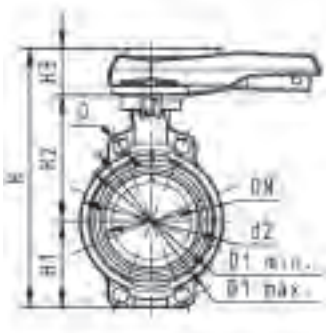

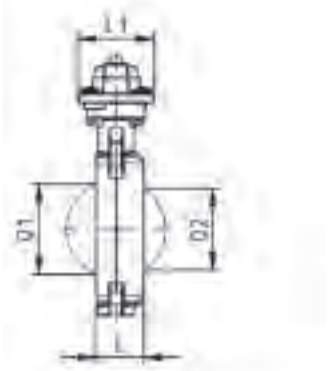

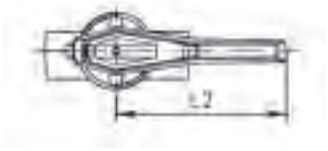

d (mm)	d2 (mm)	D (mm)	D1 min. (mm)	D1 max. (mm)	H (mm)	H1 (mm)	H2 (mm)	H3 (mm)	L (mm)	L1 (mm)	L2 (mm)	Q1 (mm)	Q2 (mm)
63	104	19	120	125	264	77	134	54	45	106	205	40	
75	115	19	140	145	277	83	140	54	46	106	205	54	35
90	131	19	150	160	289	89	146	54	49	106	205	67	50
110	161	19	175	191	325	104	167	55	56	106	255	88	74
140	187	23	210	216	352	117	181	55	64	106	255	113	97
160	215	24	241	241	373	130	189	55	72	106	255	139	123
225	267	23	290	295	435	158	210	67	73	140	408	178	169

Lugstyle butterfly valves type 578



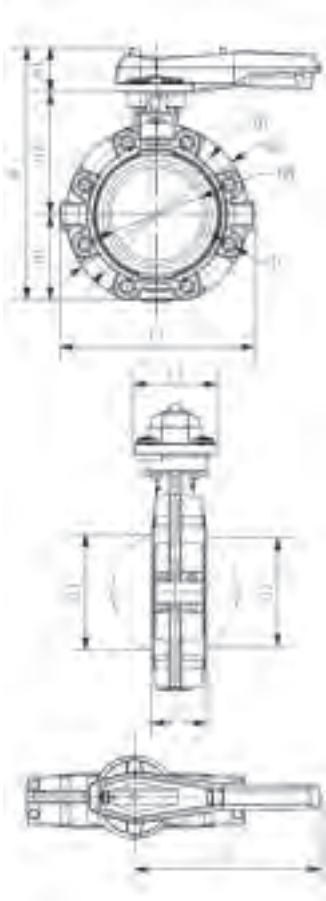

Lugstyle butterfly valve type 578 PVC-U SF
Hand lever with ratchet settings

Model:

- Silicone free/paint-compatible
- Housing material: PP-GF30 with SS316 lug-inserts
- Overall length according to EN 558, ISO 5752 (DN50 - 200 line 25, DN250 - 300 line 10)
- Connecting dimension: ISO 7005 PN10, EN 1092 PN10, DIN 2501 PN10
- We recommend for the dimensions DN250 and DN300 only 6 bar maximum system pressure for the hand lever version

Option:

- Optional accessory: Valve-Integrated position feedback with limit switches (limit switches have to be ordered separately)

d (mm)	Size (inch)	DN (mm)	PN (bar)	kv-value (Δp=1 bar) (l/min)	EPDM Code	Weight (kg)	FPM Code	Weight (kg)
63	2	50	10	1470	**161 578 402**	1.800	**161 578 422**	1.800
75	2 ½	65	10	2200	**161 578 403**	1.895	**161 578 423**	1.895
90	3	80	10	3000	**161 578 404**	2.251	**161 578 424**	2.251
110	4	100	10	6500	**161 578 405**	3.146	**161 578 425**	3.146
140	5	125	10	11500	**161 578 406**	4.660	**161 578 426**	4.660
160	6	150	10	16600	**161 578 407**	6.430	**161 578 427**	6.430
225	8	200	10	39600	**161 578 408**	8.625	**161 578 428**	8.625
280	10	250	10	55200	**161 578 409**	19.528	**161 578 429**	19.528
315	12	300	10	80000	**161 578 410**	26.106	**161 578 430**	26.106

d (mm)	d2 (mm)	D	D1 (mm)	H (mm)	H1 (mm)	H2 (mm)	H3 (mm)	L (mm)	L1 (mm)	L2 (mm)	L3 (mm)	Q1 (mm)	Q2 (mm)
63	160	M16	125	265	77	134	54	45	106	205	165	40	
75	180	M16	145	277	83	140	54	46	106	205	182	54	35
90	195	M16	160	289	89	146	54	49	106	205	210	67	50
110	226	M16	180	328	106	167	55	56	106	255	240	88	74
140	258	M16	210	357	121	181	55	64	106	255	272	113	97
160	284	M20	240	377	133	189	55	72	106	255	300	139	123
225	341	M20	295	436	159	210	67	73	140	408	360	178	169
280	412	M20	350	536	205	264	67	113	140	408	440	210	207
315	482	M20	400	586	234	285	67	113	140	408	510	256	253

Cone check valves



Check valve type 561 PVC-U SF
With solvent cement sockets metric

Model:

- Sealing at a minimum water column of 2 m
- Silicone free/paint-compatible
- Designed for easy installation and removal
- Vibration free even at high flow velocity
- Flow-optimized return cone, double guided
- For vertical installation
- Compact installation length, same as ball valve type 546
- Z-length, end connectors and union nuts **not** compatible with type 360
- New DN65-DN100

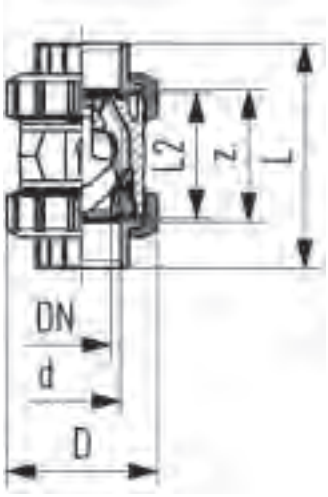

d (mm)	DN (mm)	PN (bar)	kv-value (Δp=1 bar) (l/min)	EPDM Code	Weight (kg)	FPM Code	Weight (kg)
16	10	16	190	**161 561 201**	0.120	**161 561 211**	0.120
20	15	16	180	**161 561 202**	0.130	**161 561 212**	0.130
25	20	16	380	**161 561 203**	0.250	**161 561 213**	0.270
32	25	16	460	**161 561 204**	0.290	**161 561 214**	0.290
40	32	16	850	**161 561 205**	0.510	**161 561 215**	0.510
50	40	16	1080	**161 561 206**	0.750	**161 561 216**	0.750
63	50	16	1670	**161 561 207**	1.330	**161 561 217**	1.340
75	65	16	2950	**161 561 208**	3.160	**161 561 218**	3.170
90	80	16	3600	**161 561 209**	5.040	**161 561 219**	5.060
110	100	16	4150	**161 561 210**	8.130	**161 561 220**	8.170

d (mm)	D (mm)	L (mm)	L2 (mm)	z (mm)	closest inch (inch)
16	50	92	56	64	⅜
20	50	95	56	64	½
25	58	110	65	72	¾
32	68	123	71	79	1
40	84	146	85	94	1 ¼
50	97	157	89	95	1 ½
63	124	183	101	107	2
75	166	233	136	144	2 ½
90	200	254	141	151	3
110	238	301	164	174	4



Check valve type 561 PVC-U SF
With solvent cement spigots metric

Model:

- Sealing at a minimum water column of 2 m
- Silicone free/paint-compatible
- Designed for easy installation and removal
- Vibration free even at high flow velocity
- Flow-optimized return cone, double guided
- For vertical installation
- Compact installation length, same as ball valve type 546
- Z-length, end connectors and union nuts **not** compatible with type 360
- New DN65-DN100

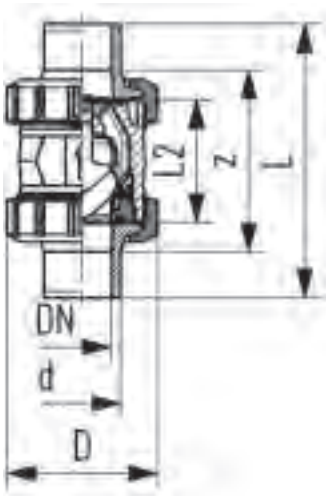

d (mm)	DN (mm)	PN (bar)	kv-value (Δp=1 bar) (l/min)	EPDM Code	Weight (kg)	FPM Code	Weight (kg)
16	10	16	190	**161 561 221**	0.130	**161 561 231**	0.130
20	15	16	180	**161 561 222**	0.130	**161 561 232**	0.130
25	20	16	380	**161 561 223**	0.260	**161 561 233**	0.280
32	25	16	460	**161 561 224**	0.300	**161 561 234**	0.310
40	32	16	850	**161 561 225**	0.520	**161 561 235**	0.520
50	40	16	1080	**161 561 226**	0.790	**161 561 236**	0.790
63	50	16	1670	**161 561 227**	1.410	**161 561 237**	1.420
75	65	16	2950	**161 561 228**	3.310	**161 561 238**	3.320
90	80	16	3600	**161 561 229**	5.220	**161 561 239**	5.250
110	100	16	4150	**161 561 230**	8.350	**161 561 240**	8.390

d (mm)	D (mm)	L (mm)	L2 (mm)	closest inch (inch)
16	50	114	56	⅜
20	50	124	56	½
25	58	144	65	¾
32	68	154	71	1
40	84	174	85	1 ¼
50	97	194	89	1 ½
63	124	224	101	2
75	166	284	136	2 ½
90	200	300	141	3
110	238	340	164	4



Check valve type 562 PVC-U SF
With solvent cement sockets metric

Model:

- For horizontal or vertical installation
- Sealing at a minimum water column of 1 m
- Silicone free/paint-compatible
- Spring loaded, spring made of stainless steel (1.4310)
- Spring available in other materials, see spare parts
- Designed for easy installation and removal
- Vibration free even at high flow velocity
- Flow-optimized return cone, double guided
- Compact installation length, same as ball valve type 546
- Z-length, end connectors and union nuts **not** compatible with type 360
- New DN65-DN100

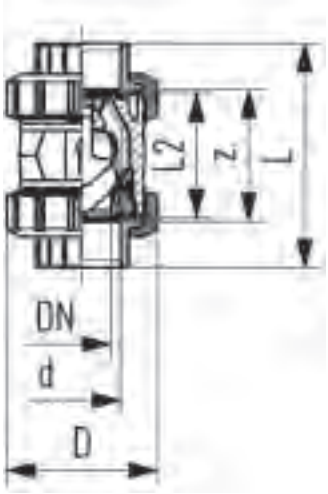

d (mm)	DN (mm)	PN (bar)	kv-value (Δp=1 bar) (l/min)	EPDM Code	Weight (kg)	FPM Code	Weight (kg)
16	10	16	190	**161 562 201**	0.120	**161 562 211**	0.120
20	15	16	180	**161 562 202**	0.130	**161 562 212**	0.130
25	20	16	380	**161 562 203**	0.250	**161 562 213**	0.270
32	25	16	460	**161 562 204**	0.290	**161 562 214**	0.290
40	32	16	850	**161 562 205**	0.510	**161 562 215**	0.510
50	40	16	1080	**161 562 206**	0.750	**161 562 216**	0.750
63	50	16	1670	**161 562 207**	1.330	**161 562 217**	1.340
75	65	16	2950	**161 562 208**	3.160	**161 562 218**	3.170
90	80	16	3600	**161 562 209**	5.040	**161 562 219**	5.060
110	100	16	4150	**161 562 210**	8.130	**161 562 220**	8.170

d (mm)	D (mm)	L (mm)	L2 (mm)	z (mm)	closest inch (inch)
16	50	92	56	64	⅜
20	50	95	56	64	½
25	58	110	65	72	¾
32	68	123	71	79	1
40	84	146	85	94	1 ¼
50	97	157	89	95	1 ½
63	124	183	101	107	2
75	166	233	136	144	2 ½
90	200	254	141	151	3
110	238	301	164	174	4



Check valve type 562 PVC-U SF
With solvent cement spigots metric

Model:

- For horizontal or vertical installation
- Sealing at a minimum water column of 1 m
- Silicone free/paint-compatible
- Spring loaded, spring made of stainless steel (1.4310)
- Spring available in other materials, see spare parts
- Designed for easy installation and removal
- Vibration free even at high flow velocity
- Flow-optimized return cone, double guided
- Compact installation length, same as ball valve type 546
- Z-length, end connectors and union nuts **not** compatible with type 360
- New DN65-DN100

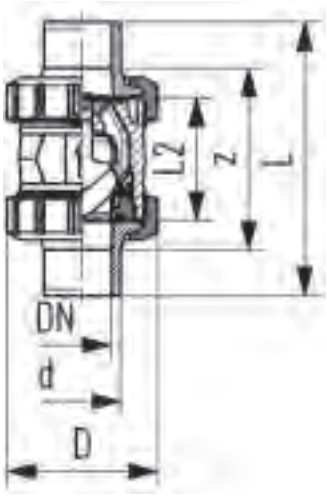

d (mm)	DN (mm)	PN (bar)	kv-value (Δp=1 bar) (l/min)	EPDM Code	Weight (kg)	FPM Code	Weight (kg)
16	10	16	190	**161 562 221**	0.130	**161 562 231**	0.130
20	15	16	180	**161 562 222**	0.130	**161 562 232**	0.130
25	20	16	380	**161 562 223**	0.260	**161 562 233**	0.280
32	25	16	460	**161 562 224**	0.300	**161 562 234**	0.310
40	32	16	850	**161 562 225**	0.520	**161 562 235**	0.520
50	40	16	1080	**161 562 226**	0.790	**161 562 236**	0.790
63	50	16	1670	**161 562 227**	1.410	**161 562 237**	1.420
75	65	16	2950	**161 562 228**	3.310	**161 562 238**	3.320
90	80	16	3600	**161 562 229**	5.220	**161 562 239**	5.250
110	100	16	4150	**161 562 230**	8.350	**161 562 240**	8.390

d (mm)	D (mm)	L (mm)	L2 (mm)	closest inch (inch)
16	50	114	56	⅜
20	50	124	56	½
25	58	144	65	¾
32	68	154	71	1
40	84	174	85	1 ¼
50	97	194	89	1 ½
63	124	224	101	2
75	166	284	136	2 ½
90	200	300	141	3
110	238	340	164	4

Angle seat valves



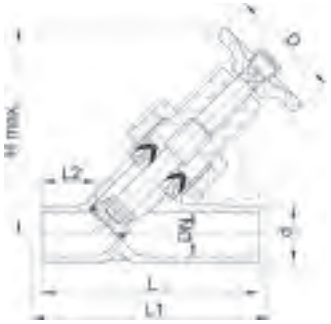

Angle seat valve type 300 PVC-U SF
With solvent cement spigots metric

Model:

- For horizontal or vertical installation
- Silicone free/paint-compatible
- Overall length EN 558

d (mm)	DN (mm)	PN (bar)	kv-value (Δp=1 bar) (l/min)	PE Code	Weight (kg)	D (mm)	L (mm)	L1 (mm)	L2 (mm)	closest inch (inch)	H max. (mm)
16	10	10	41	**161 300 800**	0.125	50	114	120	24	⅜	105
20	15	10	95	**161 300 801**	0.180	63	124	130	28	½	126
25	20	10	180	**161 300 802**	0.250	63	144	150	37	¾	140
32	25	10	327	**161 300 803**	2.600	80	154	160	37	1	166
40	32	10	484	**161 300 804**	0.580	80	174	180	44	1 ¼	191
50	40	10	725	**161 300 805**	1.005	100	194	200	48	1 ½	233
63	50	10	1130	**161 300 806**	0.944	100	224	230	60	2	264
75	65	10	1700	**161 300 807**	2.610	160	284	290	74	2 ½	335
90	80	10	2500	**161 300 808**	3.945	200	300	310	85	3	390



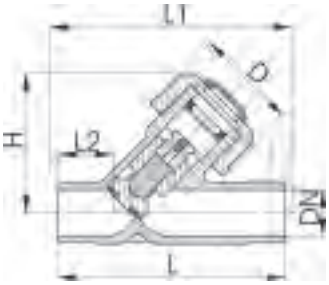

Angle seat check valve type 303 PVC-U SF
With solvent cement spigots metric

Model:

- For horizontal or vertical installation
- Leakproof even at minimum pressure
- Silicone free/paint-compatible
- Overall length EN 558

d (mm)	**DN** (mm)	**PN** (bar)	**kv-value (Δp=1 bar)** (l/min)	**EPDM Code**	**Weight** (kg)	**FPM Code**	**Weight** (kg)
16	10	10	41	**161 303 015**	0.094	**161 303 040**	0.094
20	15	10	95	**161 303 016**	0.139	**161 303 041**	0.132
25	20	10	180	**161 303 017**	0.200	**161 303 042**	0.200
32	25	10	327	**161 303 018**	0.323	**161 303 043**	0.323
40	32	10	484	**161 303 019**	0.498	**161 303 044**	0.498
50	40	10	725	**161 303 020**	0.860	**161 303 045**	0.860
63	50	10	1130	**161 303 021**	1.455	**161 303 046**	1.455
75	65	10	1700	**161 303 022**	2.483	**161 303 047**	2.450
90	80	10	2500	**161 303 023**	3.511	**161 303 048**	3.511

d (mm)	**D** (mm)	**H** (mm)	**L** (mm)	**L1** (mm)	**L2** (mm)	**closest inch** (inch)
16	39	58	114	120	24	⅜
20	43	65	124	130	28	½
25	47	75	144	150	37	¾
32	56	90	154	160	37	1
40	64	102	174	180	44	1 ¼
50	82	123	194	200	48	1 ½
63	95	144	224	230	60	2
75	92	186	284	290	74	2 ½
90	104	204	300	310	85	3

Strainers





Line strainer type 305 PVC-U SF
Transparent body with solvent cement spigots metric

Model:

- Silicone free/paint-compatible
- Overall length EN 558
- With screen PVC-U, perforation ø 0.8 mm

d (mm)	DN (mm)	PN (bar)	kv-value (Δp=1 bar) (l/min)	EPDM Code	Weight (kg)	FPM Code	Weight (kg)
20	15	10	35	**192 305 821**	0.101	**192 305 831**	0.114
25	20	10	63	**192 305 822**	0.150	**192 305 832**	0.170
32	25	10	85	**192 305 823**	0.255	**192 305 833**	0.229
40	32	10	150	**192 305 824**	0.386	**192 305 834**	0.386
50	40	10	225	**192 305 825**	0.643	**192 305 835**	0.643
63	50	10	346	**192 305 826**	0.979	**192 305 836**	1.033
75	65	10	535	**192 305 827**	1.835	**192 305 837**	1.835
90	80	10	750	**192 305 828**	2.549	**192 305 838**	2.565

d (mm)	D (mm)	H (mm)	L (mm)	L1 (mm)	L2 (mm)	closest inch (inch)
20	43	65	124	130	28	½
25	47	76	144	150	37	¾
32	56	90	154	160	37	1
40	64	104	174	180	44	1 ¼
50	82	124	194	200	48	1 ½
63	95	148	224	230	60	2
75	106	188	284	290	74	2 ½
90	120	205	300	310	85	3

Electric and pneumatic actuators

Electric actuators



Electric actuator type EA25/45/120/250

Model:

- Heating element, position feedback (Open/Close/ Middle)

Option:

- Optional accessories: Fail-safe return unit, Monitoring board, Position controller, Profibus DP board

*with adapter 198 000 587 F05 / WS 11, 198 204 057 F05 / WS 14

Type of actuator	Voltage	Torque nominal	Torque maximal	Interfaces	Code
EA25	100 -230V AC	10 Nm	25 Nm	F05* (WS 11/14)	**198 153 182**
EA25	24V AC/DC	10 Nm	25 Nm	F05* (WS 11/14)	**198 153 183**
EA45	100 -230V AC	20 Nm	45 Nm	F05* (WS 11/14)	**198 153 184**
EA45	24V AC/DC	20 Nm	45 Nm	F05* (WS 11/14)	**198 153 185**
EA120	100 -230V AC	60 Nm	120 Nm	F07 (WS17)	**198 153 186**
EA120	24V AC/DC	60 Nm	120 Nm	F07 (WS17)	**198 153 187**
EA250	100 -230V AC	100 Nm	250 Nm	F07 (WS17)	**198 153 188**
EA250	24V AC/DC	100 Nm	250 Nm	F07 (WS17)	**198 153 189**

Type of actuator	H1 (mm)	H2 (mm)	L1 (mm)	L2 (mm)	L3 (mm)	L4 (mm)	L5 (mm)	L6 (mm)	L7 (mm)	L8 (mm)	L9 (mm)
EA25	167	188	150	82.5	107	64.3	122	16	49	33	33
EA25	167	188	150	82.5	107	64.3	122	16	49	33	33
EA45	167	188	150	82.5	107	64.3	122	16	49	33	33
EA45	167	188	150	82.5	107	64.3	122	16	49	33	33
EA120	190	212	150	82.5	107	64.3	122	16	49	33	33
EA120	190	212	150	82.5	107	64.3	122	16	49	33	33
EA250	200	221	150	82.5	107	64.3	122	16	49	33	33
EA250	200	221	150	82.5	107	64.3	122	16	49	33	33





Accessory for electric actuators type 25/45/120/250

Model:

- All accessory can be retrofitted
- Accessory works with 100-230V and 24V version

Material	Description	Code
Fail-safe return unit integrated	Moves actuator in pre-defined safe position upon power loss, integrated battery pack	**199 190 601**
Fail-safe return unit external	Moves actuator in pre-defined safe position upon power loss, voltage supply implemented externally	**199 190 604**
Positioner	Continuous actuator control. 4-20mA or 0-10 V Input and 4-20 mA Feedback	**199 190 603**
Monitoring	Parameter monitoring. Generates alarm upon reaching its set limitations. Prevents water hammers or indicates maintenance need for valve	**199 190 602**
Profibus DP	Enables the actuator to be connected to a Profibus DP-V0 network	**199 190 605**
Diagnostic Tool	Enables to read from the actuator main board and check configurations	**199 190 600**



Electric actuator type EA04

Type of actuator	Voltage	Code	Weight (kg)
10Nm	100-230V	**198 151 480**	0.900
10Nm	24V	**198 151 481**	0.900
20Nm	100-230V	**198 151 482**	1.500
20Nm	24V	**198 151 483**	1.500

Product Configurator

Create your own actuator

Electric Actuator

T01	EA 11 24V with Cable Plug
T02	EA 11 100-230V with Cable Plug
T07	EA 25 24V with Cable Plug
T08	EA 25 100-230V with Cable Plug
T09	EA 120 24V with Cable Plug
T10	EA 120 100-230V with Cable Plug
T11	EA 250 24V with Cable Plug
T12	EA 250 100-230V with Cable Plug



Angle (Open/ Close)

W45	45°
W90	90°
W180	180°

Middle Position

W17	No
W18	Yes

Colour Assignment Feedback

W20	Open = rot
W21	Open= grün

Position Feedback

W23	Open/ Close
W24	Open/ Close/ Middle
W25	Middle



Wiring Feedback

W26	NC
W28	NO

Heating Threshold

W29	5°
...	[5°steps]
W37	45°

Failsafe Return uni

W39	Integrated (Battery powered)
W40	External (no Battery - 24V needed)



Accessory

W42	Positioner
W43	Monitoring
W44	Profibus

Setting Positioner

W46	BCD = 0
...	
W55	BCD = 9

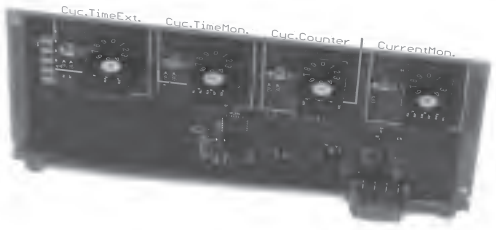

Setting Motor Current

W56	BCD = 0
...	
W65	BCD = 9

Setting Cycle Time

W66	BCD = 0
...	
W75	BCD = 9

Setting Cycle Time Monitoring

W76	BCD = 0
...	
W85	BCD = 9

Setting Cycle Counter

W86	BCD = 0
...	
W96	BCD = 9



T08	W90	W17	W20	W23	W26	W29	W39	W42	W46	W65	-	-	-	=

Pneumatic rotary actuators PA

Type PA11 / PA21



Pneumatic actuator type PA11/PA21
Fail safe to close (FC)

Inch (inch)	Type	DN-DN (mm)	Code	Weight (kg)
⅜ - 1	PA 11 FC	10 - 25	**198 150 127**	0.769
1 ¼ - 2	PA 21 FC	32 - 50	**198 150 130**	1.445



Pneumatic actuator type PA11/PA21
Fail safe to open (FO)

Inch (inch)	Type	DN-DN (mm)	Code	Weight (kg)
⅜ - 1	PA 11 FO	10 - 25	**198 150 128**	0.775
1 ¼ - 2	PA 21 FO	32 - 50	**198 150 131**	1.419



Pneumatic actuator type PA11/PA21
Double action (DA)

Inch (inch)	Type	DN-DN (mm)	Code	Weight (kg)
⅜ - 1	PA 11 DA	10 - 25	**198 150 129**	0.542
1 ¼ - 2	PA 21 DA	32 - 50	**198 150 132**	0.995



Pneumatic actuator type PA11/PA21
Fail safe to close (FC) with stroke limiter

Inch (inch)	Type	DN-DN (mm)	Code	Weight (kg)
⅜ - 1	PA 11 FC	10 - 25	**198 150 144**	0.854
1 ¼ - 2	PA 21 FC	32 - 50	**198 150 147**	1.609



Pneumatic actuator type PA11/PA21
Fail safe to open (FO) with stroke limiter

Inch (inch)	Type	DN-DN (mm)	Code	Weight (kg)
⅜ - 1	PA 11 FO	10 - 25	**198 150 145**	0.837
1 ¼ - 2	PA 21 FO	32 - 50	**198 150 148**	1.609



Pneumatic actuator type PA11/PA21
Double action (DA) with stroke limiter

Type	Inch (inch)	DN-DN (mm)	Code	Weight (kg)
PA 11 DA	⅜ - 1	10 - 25	**198 150 146**	0.647
PA 21 DA	1 ¼ - 2	32 - 50	**198 150 149**	1.185

Type PA30 / PA90



Pneumatic actuator type PA30 PA90
Fail safe to close/fail safe to open (FC/FO)

* Only valid for butterfly valve type 240, 241, 242 and ball valve type 230 - 235

	Type	hard anodized Code	Weight (kg)	nickel plated Code	Weight (kg)	hard anodized with stroke limiter Code	Weight (kg)
	PA 30 FC/FO	**198 800 757**	2.022	**198 800 034**	2.400		
*	PA 30 FO	**198 811 025**	2.020				
	PA 35 FC/FO	**198 800 037**	2.673	**198 800 052**	2.400		
*	PA 35 FO	**198 811 026**	2.675				
	PA 40 FC/FO	**198 800 728**	3.602	**198 800 004**	3.598	**198 800 017**	3.598
*	PA 40 FO	**198 811 027**	3.623				
	PA 45 FC/FO	**198 800 039**	4.962	**198 800 054**	4.600		
*	PA45 FO	**198 811 028**	4.944				
	PA 50 FC/FO	**198 800 729**	6.921	**198 800 005**	6.921	**198 800 018**	6.921
*	PA50 FO	**198 811 029**	6.819				
	PA 55 FC/FO	**198 800 041**	9.354	**198 800 056**	9.400		
*	PA 55 FO	**198 811 030**	9.203				
	PA 60 FC/FO	**198 800 730**	11.371	**198 800 006**	12.895	**198 800 019**	12.895
	PA 65 FC/FO	**198 800 043**	15.900	**198 800 058**	15.900		
	PA 70 FC/FO	**198 800 731**	18.758	**198 800 007**	19.496	**198 800 020**	19.496
*	PA 70 FO	**198 811 198**	18.750				
	PA 75 FC/FO	**198 800 045**	26.700	**198 800 060**	26.700		
	PA 80 FC/FO	**198 800 047**	34.400	**198 800 062**	34.400		

	Type	epoxy coated Code	Weight (kg)
	PA 30 FC/FO	**198 811 194**	2.400
*	PA 30 FO		
	PA 35 FC/FO	**198 800 029**	2.400
*	PA 35 FO		
	PA 40 FC/FO	**198 800 025**	3.598
*	PA 40 FO		
	PA 45 FC/FO		
*	PA45 FO		
	PA 50 FC/FO	**198 800 026**	6.921
*	PA50 FO		
	PA 55 FC/FO	**198 811 190**	9.424
*	PA 55 FO		
	PA 60 FC/FO		
	PA 65 FC/FO		
	PA 70 FC/FO	**198 800 028**	19.496
*	PA 70 FO		
	PA 75 FC/FO		
	PA 80 FC/FO		

table continued on the next page

	Type		D1 (mm)	D2 (mm)	D3[M] (mm)	D4 (inch)	D5 (mm)	L (mm)	L2 (mm)	L3 (mm)	L4 (mm)	L5 (mm)	H (mm)
	PA 30 FC/FO	F04	42	30	M5x9		10	276	11	35	70	32	102
*	PA 30 FO	F04	42	30	M5x9	⅛	10	276	11	35	70	32	102
	PA 35 FC/FO	F05	50	35	M6x11		12	326	14	35	70	32	111
*	PA 35 FO	F05	50	35	M6x11	⅛	12	326	14	35	70	32	111
	PA 40 FC/FO	F05	50	35	M6x11		12	370	14	35	70	32	129
*	PA 40 FO	F05	50	35	M6x11	⅛	12	370	14	35	70	32	129
	PA 45 FC/FO	F07	70	55	M8x15	⅛	15	411	17	35	70	32	139
*	PA45 FO	F07	70	55	M8x15	⅛	15	411	17	35	70	32	139
	PA 50 FC/FO	F07	70	55	M8x15		15	423	17	35	70	32	149
*	PA50 FO	F07	70	55	M8x15	⅛	15	423	17	35	70	32	149
	PA 55 FC/FO	F10	102	70	M10x17		19	452	22	35	70	32	161
*	PA 55 FO	F10	102	70	M10x17	⅛	19	452	22	35	70	32	161
	PA 60 FC/FO	F10	102	70	M10x17	⅛	19	503	22	35	70	32	173
	PA 65 FC/FO	F12	125	85	M12x21	¼		648	27			32	191
	PA 70 FC/FO	F12	125	85	M12x21			663	27			32	196
*	PA 70 FO	F12	125	85	M12x21	¼		663	27			32	196
	PA 75 FC/FO	F14	140	100	M16x25	¼		824	36			32	229
	PA 80 FC/FO	F14	140	100	M16x25	¼		918	36			32	241

	Type	H1 (mm)	H2 (mm)	H3 (mm)	H4 (mm)	H5 (mm)	H6 (mm)	H7 (mm)	H8 (mm)
	PA 30 FC/FO	70	21	18	65	13	20	36	
*	PA 30 FO	70	21	18	65	13	20	36	
	PA 35 FC/FO	78	21	18	72	13	20	36	
*	PA 35 FO	78	21	18	72	13	20	36	
	PA 40 FC/FO	86	25	21	80	13	30	36	
*	PA 40 FO	86	25	21	80	13	30	36	
	PA 45 FC/FO	96	25	21	90	16	30	36	
*	PA45 FO	96	25	21	90	16	30	36	
	PA 50 FC/FO	106	25	26	100	17	30	36	
*	PA50 FO	106	25	26	100	17	30	36	
	PA 55 FC/FO	118	25	25	112	19	30	36	
*	PA 55 FO	118	25	25	112	19	30	36	
	PA 60 FC/FO	130	25	32	124	19	30	36	
	PA 65 FC/FO	148	24	34	137				22

table continued on the next page

	Type	H1 (mm)	H2 (mm)	H3 (mm)	H4 (mm)	H5 (mm)	H6 (mm)	H7 (mm)	H8 (mm)
	PA 70 FC/FO	153	24	38	145				24
*	PA 70 FO	153	24	38	145				24
	PA 75 FC/FO	186	24	43	166				27
	PA 80 FC/FO	198	24	44	180				32

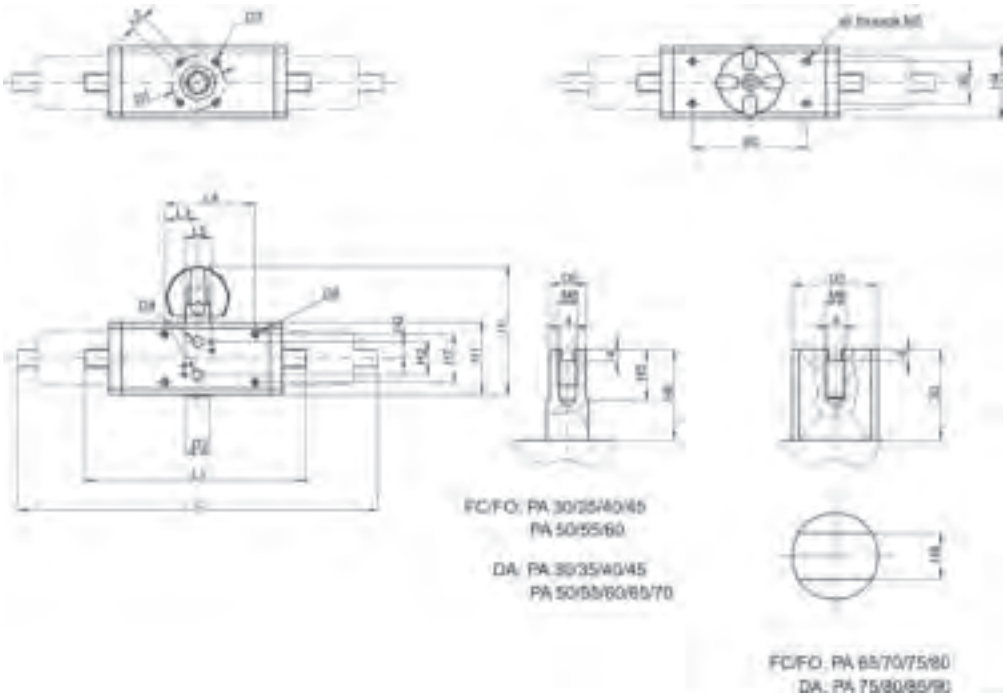



Pneumatic actuator type PA30 PA90
Double acting (DA)

Type	hard anodized Code	Weight (kg)
PA 30 DA	**198 800 737**	1.004
PA 35 DA	**198 800 758**	1.346
PA 40 DA	**198 800 759**	1.731
PA 45 DA	**198 800 040**	2.155
PA 50 DA	**198 800 733**	2.981
PA 55 DA	**198 800 042**	3.892
PA 60 DA	**198 800 734**	5.647
PA 65 DA	**198 800 044**	7.293
PA 70 DA	**198 800 735**	9.008
PA 75 DA	**198 800 046**	12.000
PA 80 DA	**198 800 048**	14.000
PA 85 DA	**198 800 050**	21.527
PA 90 DA	**198 800 051**	25.400

H7 (mm)	D5 (mm)	H6 (mm)	L4 (mm)	L3 (mm)	H5 (mm)	D3[M] (mm)		D1 (mm)	D2 (mm)	D4 (inch)	L1 (mm)	L2 (mm)	L5 (mm)	H (mm)	H1 (mm)
36	9	20	70	35	10	M5x9	F03	36	25	⅛	177	9		92	60
36	10	20	70	35	13	M5x9	F03	42	30	⅛	190	11		98	66
36	10	20	70	35	13	M5x9	F05	42	30	⅛	198	11		102	70
36	12	20	70	35	13	M6x11	F05	50	35	⅛	235	14		111	78
36	12	30	70	35	13	M6x11	F05	50	35	⅛	250	14		129	86
36	15	30	70	35	16	M8x15	F07	70	55	⅛	279	17		139	96
36	15	30	70	35	17	M8x15	F07	70	55	⅛	341	17		149	106
36	19	30	70	35	19	M10x17	F10	102	70	⅛	350	22		161	118
36	19	30	70	35	19	M10x17	F10	102	70	⅛	381	22		173	130

table continued on the next page

H7 (mm)	D5 (mm)	H6 (mm)	L4 (mm)	L3 (mm)	H5 (mm)	D3[M] (mm)		D1 (mm)	D2 (mm)	D4 (inch)	L1 (mm)	L2 (mm)	L5 (mm)	H (mm)	H1 (mm)
						M12x21	F12	125	85	¼	416	27	32	191	148
						M12x21	F12	125	85	¼	466	27	32	197	153
						M16x25	F14	140	100	¼	555	36	32	229	186
						M16x25	F14	140	100	¼	581	36	32	241	198

H2 (mm)	H3 (mm)	H4 (mm)	H8 (mm)
25	12	55	
25	13	60	
21	18	65	
21	18	72	
25	21	80	
25	21	90	
25	26	100	
25	25	112	
25	32	124	
24	34	137	22
24	38	145	24
24	43	166	27
24	44	180	32

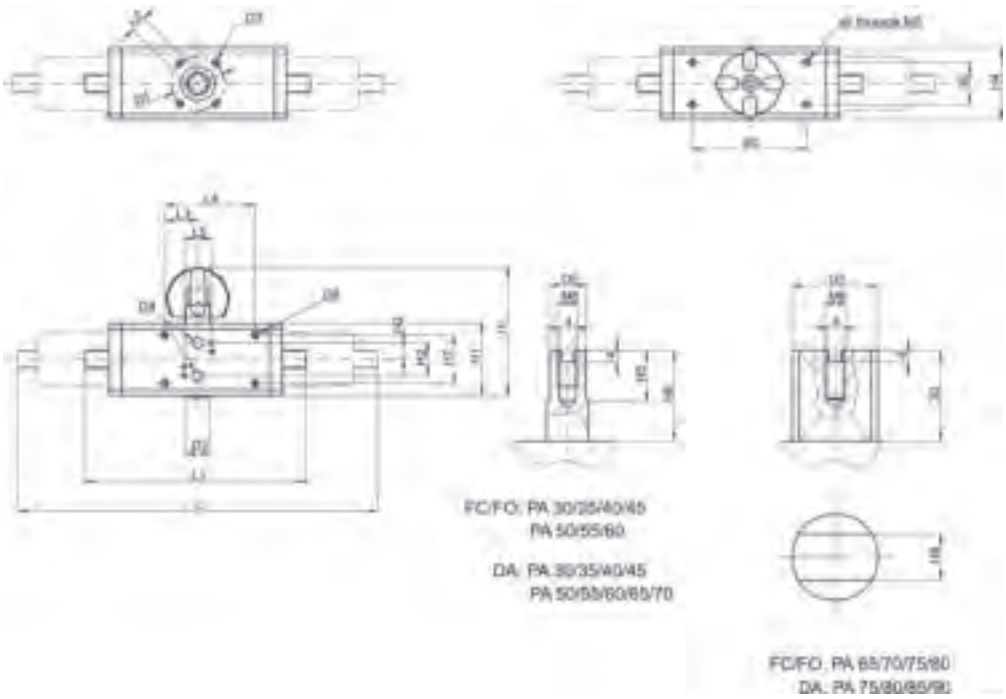

Solvent cements and tools

Tangit Rapid solvent free adhesive for PVC-U



Tangit Rapid cartridges kit

- 2-Component-Adhesive
- For PVC-U and PVC-C
- Tangit Rapid Kit consists of 6 cartridges, 12 mixers and 2 plastic brushes
- Tool needed: Tangit Rapid dispenser and mixers
- Check chemical resistance list (www.gfps.com)

d-d (mm)	Code	Weight (kg)	description
16 - 140	**799 302 005**	0.566	50ml
110 - 400	**799 302 007**	3.700	400ml



Tangit Rapid dispenser

- For Tangit Rapid cartridges

d-d (mm)	Code	Weight (kg)	description
16 - 140	**799 302 011**	0.175	50ml
110 - 400	**799 302 012**	1.900	400ml



Tangit Rapid plastic brush

Dimension	Code	Weight (kg)
3/8"	**799 302 021**	0.006
1"	**799 302 022**	0.008
2"	**799 302 023**	0.010



Tangit Rapid mixer set

- For Tangit Rapid cartridges
- Bag with 30 pieces for 50ml and 15 pieces for 400ml

description	Code	Weight (kg)
50ml	**799 302 032**	0.160
400ml	**799 302 033**	0.190



Tangit Ruler with marking for insertion depth

d-d (mm)	Code	Weight (kg)
16 - 400	**799 302 036**	0.044

Solvent cementing accessories



Tangit Express solvent cement for PVC-U

- Fast curing cement
- Ideal for repair work
- For solvent cementing of joints up to d110
- Tin à 0.500 kg

Code	Weight (kg)
799 298 011	0.500



Tangit solvent cement for PVC-U

- 0.125 kg tube
- Tin à 0.250, 0.500 and 1.000 kg (Net)

Code	Weight (kg)	Description
799 298 000	0.125	tube: 0.125 kg
799 298 001	0.250	tin: 0.25 kg
799 298 002	0.500	tin: 0.50 kg
799 298 003	1.000	tin: 1.00 kg



Cap for cement

- Tangit cement
- Cap prevents the evaporation of the solvent whilst using the Tangit cement

Code	Weight (kg)
799 298 028	0.035



Tangit cleaner

Model:

- 1 litre tin

Code	Weight (kg)
799 298 010	0.900

Brushes



Round brush

	d-d (mm)	Code	Weight (kg)	Closest inch (inch)
4 mm (for Fittings 6-10mm)	6 - 10	**799 299 001**	0.004	⅛
8 mm (for Fittings 12-32mm)	12 - 32	**799 299 002**	0.006	¼ - 1



Flat brush

d-d (mm)		Closest inch (inch)	Code	Weight (kg)
40 - 63	25x3 mm (for Fittings 40-63mm)	1 ¼ - 2	**799 299 003**	0.015
75 - 225	50x5 mm (for Fittings 75-225mm)	2 ½ - 8	**799 299 004**	0.035
250 - 400	75x6 mm (for Fittings 250-400mm)	9 - 16	**799 299 005**	0.053

Spare parts		Page
	Spare parts ball valves	486
	Spare parts diaphragm valves	493
	Spare parts butterfly valves	501
	Spare parts Process control valves	504
	Spare parts cone check valves	510
	Spare parts wafer check valves	513
	Spare parts angle seat valves	515
	Spare parts solenoid valves	521
	Spare parts variable area flow meters	523

Spare parts ball valves

Spare parts ball valve type 546





Central part

Model:

- Every connecting pieces and union nuts are listed on product range industry valves
- Ball seals standard in PTFE
- Central part consisting of: body (1), union bush (2), ball (5), stem (6), ball-, backing-, body-, face- and stem seal (7-11), standard lever (12) and threaded inserts stainless steel (14)

d (mm)	Size (inch)	DN (mm)	PVC-U EPDM Code	PVC-U FPM Code
16	⅜	10	**161 486 151**	**161 486 163**
20	½	15	**161 486 151**	**161 486 163**
25	¾	20	**161 486 152**	**161 486 164**
32	1	25	**161 486 153**	**161 486 165**
40	1 ¼	32	**161 486 154**	**161 486 166**
50	1 ½	40	**161 486 155**	**161 486 167**
63	2	50	**161 486 156**	**161 486 168**
75	2 ½	65	**161 486 157**	**161 486 169**
90	3	80	**161 486 158**	**161 486 170**
110	4	100	**161 486 159**	**161 486 171**









Lever

d (mm)	Size (inch)	DN (mm)	Standard lever red Code	Standard lever black Code	Multifunctional lever Code
16	⅜	10	**167 484 088**	**167 484 076**	**167 484 100**
20	½	15	**167 484 088**	**167 484 076**	**167 484 100**
25	¾	20	**167 484 089**	**167 484 077**	**167 484 101**
32	1	25	**167 484 090**	**167 484 078**	**167 484 102**
40	1 ¼	32	**167 484 091**	**167 484 079**	**167 484 103**
50	1 ½	40	**167 484 092**	**167 484 080**	**167 484 104**
63	2	50	**167 484 093**	**167 484 081**	**167 484 105**
75	2 ½	65	**167 484 094**	**167 484 082**	**161 486 689**
90	3	80	**167 484 095**	**167 484 083**	**161 486 690**
110	4	100	**167 484 096**	**167 484 084**	**161 486 691**



Face seal

Model:

- Face seal no. 10

d (mm)	Size (inch)	DN (mm)	EPDM Code	FPM Code
16	⅜	10	**748 410 059**	**749 410 059**
20	½	15	**748 410 059**	**749 410 059**
25	¾	20	**748 410 106**	**749 410 106**
32	1	25	**748 410 151**	**749 410 151**
40	1 ¼	32	**748 410 062**	**749 410 062**
50	1 ½	40	**748 410 003**	**749 410 003**
63	2	50	**748 410 231**	**749 410 231**
75	2 ½	65	**748 410 119**	**749 410 119**
90	3	80	**748 410 023**	**749 410 023**
110	4	100	**748 410 254**	**749 410 254**



Seal set

Model:

- Seal set consisting of: backing-, body-, face- and stem seal (8-11)

d (mm)	Size (inch)	DN (mm)	DN (mm)	EPDM Code	FPM Code
16 - 20	½	15	10 - 15	**161 486 400**	**161 486 410**
25	¾	20	20	**161 486 401**	**161 486 411**
32	1	25	25	**161 486 402**	**161 486 412**
40	1 ¼	32	32	**161 486 403**	**161 486 413**
50	1 ½	40	40	**161 486 404**	**161 486 414**
63	2	50	50	**161 486 405**	**161 486 415**
75	2 ½	65	65	**161 486 406**	**161 486 416**
90	3	80	80	**161 486 407**	**161 486 417**
110	4	100	100	**161 486 408**	**161 486 418**



Ball set

Model:

- Ball seals standard in PTFE
- Ball set consisting of: ball (5), stem (6), ball-, backing-, body- and stem seal (7-9,11)

d (mm)	Size (inch)	DN (mm)	PVC-U EPDM Code	PVC-U FPM Code
16	⅜	10	**161 486 375**	**161 486 385**
25	¾	20	**161 486 376**	**161 486 386**
32	1	25	**161 486 377**	**161 486 387**
40	1 ¼	32	**161 486 378**	**161 486 388**
50	1 ½	40	**161 486 379**	**161 486 389**
63	2	50	**161 486 380**	**161 486 390**
75	2 ½	65	**161 486 381**	**161 486 391**
90	3	80	**161 486 382**	**161 486 392**
110	4	100	**161 486 383**	**161 486 393**
20	½	15	**161 486 375**	**161 486 385**

Spare parts ball valve type 543 horizontal

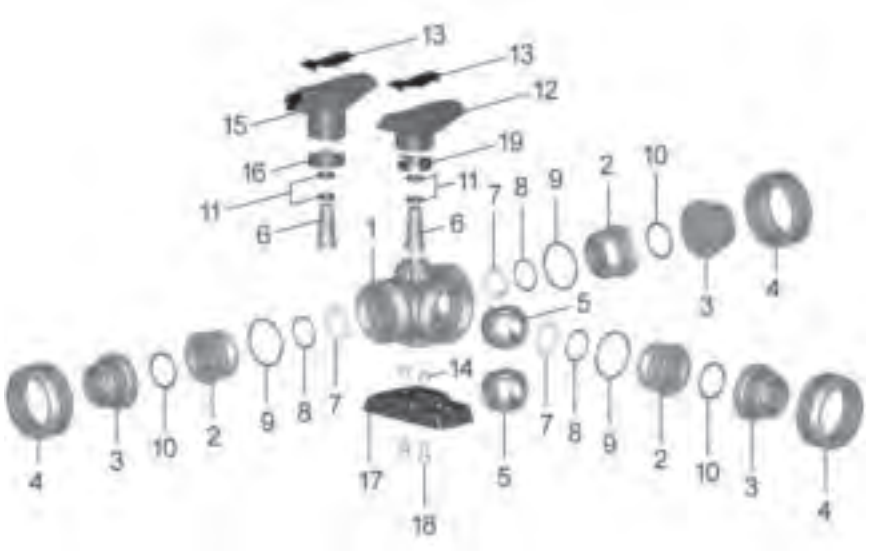



Central part L-port

Model:

- Ball seals standard in PTFE
- Central part consisting of: body (1), union bush (2), ball (5), stem (6), ball-, backing-, body-, face- and stem seal (7-11), standard lever (12) and threaded inserts stainless steel (14)
- Every connecting pieces and union nuts are listed on product range industry valves

d (mm)	Size (inch)	DN (mm)	PVC-U EPDM Code	PVC-U FPM Code
16	⅜	10	**161 488 002**	**161 488 012**
20	½	15	**161 488 002**	**161 488 012**
25	¾	20	**161 488 003**	**161 488 013**
32	1	25	**161 488 004**	**161 488 014**
40	1 ¼	32	**161 488 005**	**161 488 015**
50	1 ½	40	**161 488 006**	**161 488 016**
63	2	50	**161 488 007**	**161 488 017**



Central part T-port

Model:

- Ball seals standard in PTFE
- Central part consisting of: body (1), union bush (2), ball (5), stem (6), ball-, backing-, body-, face- and stem seal (7-11), standard lever (12) and threaded inserts stainless steel (14)

d (mm)	Size (inch)	DN (mm)	PVC-U EPDM Code	PVC-U FPM Code
16	⅜	10	**161 488 022**	**161 488 032**
20	½	15	**161 488 022**	**161 488 032**
25	¾	20	**161 488 023**	**161 488 033**
32	1	25	**161 488 024**	**161 488 034**
40	1 ¼	32	**161 488 025**	**161 488 035**
50	1 ½	40	**161 488 026**	**161 488 036**
63	2	50	**161 488 027**	**161 488 037**



Assembly kit

Model:

- Intermediate element for ball valve type 543 horizontal and electric or pneumatic actuators EA21; PA11/21
- Including screws and position indicator for actuators

d (mm)	Inch (inch)	DN (mm)	Code
16 - 20	⅜ - ½	10 - 15	**167 484 941**
25 - 32	¾ - 1	20 - 25	**167 484 942**
40 - 50	1 ¼ - 1 ½	32 - 40	**167 484 943**
63	2	50	**167 484 944**



Turn limiter 90°

d (mm)	Size (inch)	DN (mm)	Code
16	⅜	10	**167 482 479**
20	½	15	**167 482 479**
25	¾	20	**167 482 480**
32	1	25	**167 482 480**
40	1 ¼	32	**167 482 481**
50	1 ½	40	**167 482 481**
63	2	50	**167 482 482**



Face seal

Model:

- Face seal no. 10

d (mm)	Size (inch)	DN (mm)	EPDM Code	FPM Code
16	⅜	10	**748 410 059**	**749 410 059**
20	½	15	**748 410 059**	**749 410 059**
25	¾	20	**748 410 106**	**749 410 106**
32	1	25	**748 410 151**	**749 410 151**
40	1 ¼	32	**748 410 062**	**749 410 062**
50	1 ½	40	**748 410 003**	**749 410 003**
63	2	50	**748 410 231**	**749 410 231**







Lever

d (mm)	Size (inch)	DN (mm)
16	⅜	10
20	½	15
25	¾	20
32	1	25
40	1 ¼	32
50	1 ½	40
63	2	50

d (mm)	Standard lever L-port red Code	Standard lever L-port black Code	Standard lever T-port red Code	Standard lever T-port black Code	Multifunctional-lever L-port red Code
16	**167 484 488**	**167 484 376**	**167 484 588**	**167 484 576**	**167 484 442**
20	**167 484 488**	**167 484 376**	**167 484 588**	**167 484 576**	**167 484 442**
25	**167 484 489**	**167 484 377**	**167 484 589**	**167 484 577**	**167 484 443**
32	**167 484 490**	**167 484 378**	**167 484 590**	**167 484 578**	**167 484 444**
40	**167 484 491**	**167 484 379**	**167 484 591**	**167 484 579**	**167 484 445**
50	**167 484 492**	**167 484 380**	**167 484 592**	**167 484 580**	**167 484 446**
63	**167 484 493**	**167 484 381**	**167 484 593**	**167 484 581**	**167 484 447**

d (mm)	Multifunctional-lever T-port red Code
16	**167 484 542**
20	**167 484 542**
25	**167 484 543**
32	**167 484 544**
40	**167 484 545**
50	**167 484 546**
63	**167 484 547**



Ball set L-port

Model:

- Ball set consisting of: lever (12), ball (5), stem (6), ball-, backing-, body- and stem seal (7-9,11)
- Ball seals standard in PTFE

d (mm)	Size (inch)	DN (mm)	PVC-U EPDM Code	PVC-U FPM Code
16	⅜	10	**161 488 162**	**161 488 172**
20	½	15	**161 488 162**	**161 488 172**
25	¾	20	**161 488 163**	**161 488 173**
32	1	25	**161 488 164**	**161 488 174**
40	1 ¼	32	**161 488 165**	**161 488 175**
50	1 ½	40	**161 488 166**	**161 488 176**
63	2	50	**161 488 167**	**161 488 177**

Spare parts ball valve type 543 vertical





Central part diverter ball

Model:

- Ball seals standard in PTFE
- Central part consisting of: body (1), union bush (2), ball (5), stem (6), ball-, backing-, body-, face- and stem seal (7-11) and standard lever (12)

d (mm)	Size (inch)	DN (mm)	PVC-U EPDM Code	PVC-U FPM Code
16	⅜	10	**161 488 061**	**161 488 071**
20	½	15	**161 488 062**	**161 488 072**
25	¾	20	**161 488 063**	**161 488 073**
32	1	25	**161 488 064**	**161 488 074**
40	1 ¼	32	**161 488 065**	**161 488 075**
50	1 ½	40	**161 488 066**	**161 488 076**
63	2	50	**161 488 067**	**161 488 077**



Central part L-port

Model:

- Every connecting pieces and union nuts are listed on product range industry valves
- Ball seals standard in PTFE
- Central part consisting of: body (1), union bush (2), ball (5), stem (6), ball-, backing-, body-, face- and stem seal (7-11) and standard lever (12)

d (mm)	Size (inch)	DN (mm)	PVC-U EPDM Code	PVC-U FPM Code
16	⅜	10	**161 488 041**	**161 488 051**
20	⅜	15	**161 488 042**	**161 488 052**
25	¾	20	**161 488 043**	**161 488 053**
32	1	25	**161 488 044**	**161 488 054**
40	1 ¼	32	**161 488 045**	**161 488 055**
50	1 ½	40	**161 488 046**	**161 488 056**
63	2	50	**161 488 047**	**161 488 057**



Assembly kit

Model:

- Intermediate element for ball valve type 543 vertical and electric or pneumatic actuators EA21; PA11/21
- Including screws and position indicator for actuators

d (mm)	Inch (inch)	DN (mm)	Code
16 - 20	⅜ - ½	10 - 15	**167 484 945**
25 - 32	¾ - 1	20 - 25	**167 484 946**
40 - 50	1 ¼ - 1 ½	32 - 40	**167 484 947**
63	2	50	**167 484 948**



Face seal

Model:

- Face seal no. 10

d (mm)	Size (inch)	DN (mm)	EPDM Code	FPM Code
16	⅜	10	**748 410 059**	**749 410 059**
20	½	15	**748 410 059**	**749 410 059**
25	¾	20	**748 410 106**	**749 410 106**
32	1	25	**748 410 151**	**749 410 151**
40	1 ¼	32	**748 410 062**	**749 410 062**
50	1 ½	40	**748 410 003**	**749 410 003**
63	2	50	**748 410 231**	**749 410 231**



Lever

d (mm)	Size (inch)	DN (mm)	Standard lever L-port red Code	Standard lever diverter ball red Code	Multifunctional-lever L-port red Code	Multifunctional-lever diverter ball red Code
16	⅜	10	**167 484 688**	**167 484 788**	**167 484 642**	**167 484 742**
20	½	15	**167 484 688**	**167 484 788**	**167 484 642**	**167 484 742**
25	¾	20	**167 484 689**	**167 484 789**	**167 484 643**	**167 484 743**
32	1	25	**167 484 690**	**167 484 790**	**167 484 644**	**167 484 744**
40	1 ¼	32	**167 484 691**	**167 484 791**	**167 484 645**	**167 484 745**
50	1 ½	40	**167 484 692**	**167 484 792**	**167 484 646**	**167 484 746**
63	2	50	**167 484 693**	**167 484 793**	**167 484 647**	**167 484 747**

Spare parts metering ball valve type 523



Central part

Model:

- Every connecting pieces and union nuts are listed on product range industry valves
- Ball seals standard in PTFE
- Central part consisting of: body, union bush, ball, stem, ball-, backing-, body-, face- and stem seal, standard lever and threaded inserts stainless steel

d (mm)	Size (inch)	DN (mm)	PVC-U EPDM Code	PVC-U FPM Code
16	⅜	10	**161 485 351**	**161 485 361**
20	½	15	**161 485 353**	**161 485 363**

Spare parts diaphragm valves



Spare parts diaphragm
For type 604/605

d (mm)	Size (inch)	DN (mm)	EPDM Code	FPM Code	PTFE/EPDM Code	PTFE/FPM Code
20	½	15	**748 501 012**	**749 501 012**	**747 502 052**	**747 503 012**



Mounting Tool
Type 604/605

Model:

- Hook wrench for easy opening & maintenance

d (mm)	DN (mm)	Code	Weight (kg)
		700 278 354	0.41

Spare parts for valve body type 514



O-ring

d (mm)	Size (inch)	DN (mm)	EPDM Code	FPM Code
20	½	15	**748 410 006**	**749 410 006**
25	¾	20	**748 410 007**	**749 410 007**
32	1	25	**748 410 008**	**749 410 008**
40	1 ¼	32	**748 410 009**	**749 410 009**
50	1 ½	40	**748 410 010**	**749 410 010**
63	2	50	**748 410 011**	**749 410 011**



Union nut

d (mm)	Size (inch)	DN (mm)	PVC-U Code
20	½	15	**721 890 006**
25	¾	20	**721 890 007**
32	1	25	**721 890 008**
40	1 ¼	32	**721 890 009**
50	1 ½	40	**721 890 010**
63	2	50	**721 890 011**



Valve end with spigot

d (mm)	Size (inch)	DN (mm)	PVC-U Code	PVDF Code
20	½	15	**721 600 406**	
25	¾	20	**721 600 407**	
32	1	25	**721 600 408**	
40	1 ¼	32	**721 600 409**	
50	1 ½	40	**721 600 410**	
63	2	50	**721 600 411**	**735 608 611**



Union end

d (mm)	Size (inch)	DN (mm)	PVC-U metric Code	PVC-U JIS Code	PVC-U BS Code
20	½	15	**721 500 106**	**721 605 106**	**721 601 106**
25	¾	20	**721 500 107**	**721 605 107**	**721 601 107**
32	1	25	**721 500 108**	**721 605 108**	**721 601 108**
40	1 ¼	32	**721 500 109**	**721 605 109**	**721 601 109**
50	1 ½	40	**721 500 110**	**721 605 110**	**721 601 110**
63	2	50	**721 500 111**	**721 605 111**	**721 601 111**



Valve body with true union

Model:

- Without connection parts

d (mm)	Size (inch)	DN (mm)	PVC-U Code
20	½	15	**161 492 062**
25	¾	20	**161 492 063**
32	1	25	**161 492 064**
40	1 ¼	32	**161 492 065**
50	1 ½	40	**161 492 066**
63	2	50	**161 492 067**

Spare parts for valve body type 515







Valve body with spigot ends

d (mm)	DN (mm)	Size (inch)	PVC-U solvent cement spigot Code	Weight (kg)
20	15	½	**161 492 072**	0.115
25	20	¾	**161 492 073**	0.183
32	25	1	**161 492 074**	0.246
40	32	1 ¼	**161 492 075**	0.379
50	40	1 ½	**161 492 076**	0.602
63	50	2	**161 492 077**	1.055



Spare parts for valve body type 517
Flat gasket

d (mm)	Size (inch)	DN (mm)	EPDM Code	FPM Code
20	½	15	**748 400 006**	**749 400 006**
25	¾	20	**748 400 007**	**749 400 007**
32	1	25	**748 400 008**	**749 400 008**
40	1 ¼	32	**748 400 009**	**749 400 009**
50	1 ½	40	**748 400 010**	**749 400 010**
63	2	50	**748 400 011**	**749 400 011**



Spare parts diaphragm
For type 514/515/517/519

Model:

- For 5 series Diaphragm valve

d (mm)	Size (inch)	DN (mm)
20	½	15
25	¾	20
32	1	25
40	1 ¼	32
50	1 ½	40
63	2	50

d (mm)	NBR Code	EPDM Code	FPM Code	PTFE/EPDM Code	PTFE/EPDM HP Code	PTFE/FPM Code
20	**745 500 012**	**748 500 012**	**749 500 012**	**747502 012****	**747 502 032**	**747 503 012**
25	**745 500 013**	**748 500 013**	**749 500 013**	**747 502 013**	**747 502 033**	**747 503 013**
32	**745 500 014**	**748 500 014**	**749 500 014**	**747 502 014**	**747 502 034**	**747 503 014**
40	**745 500 015**	**748 500 015**	**749 500 015**	**747 502 015**	**747 502 035**	**747 503 015**
50	**745 500 016**	**748 500 016**	**749 500 016**	**747 502 016**	**747 502 036**	**747 503 016**
63	**745 500 017**	**748 500 017**	**749 500 017**	**747 502 017**	**747 502 037**	**747 503 017**

Spare parts for automatic valves
Diastar Six/Ten/Sixteen









Actuators

d (mm)	Size (inch)	DN (mm)
20	½	15
25	¾	20
32	1	25
40	1 ¼	32
50	1 ½	40
63	2	50

d (mm)	Diastar Six Code	Diastar Ten Code	Diastar Ten + FC Code	Diastar Sixteen FC Code	Diastar Ten FO Code	Diastar Ten DA Code
20	**198 151 762**	**198 151 772**	**198 153 062**	**198 151 782**	**198 151 792**	**198 151 802**
25	**198 151 763**	**198 151 773**	**198 153 063**	**198 151 783**	**198 151 793**	**198 151 803**
32	**198 151 764**	**198 151 774**	**198 153 064**	**198 151 784**	**198 151 794**	**198 151 804**
40	**198 151 765**	**198 151 775**	**198 153 065**	**198 151 785**	**198 151 795**	**198 151 805**
50	**198 151 766**	**198 151 776**	**198 153 066**	**198 151 786**	**198 151 796**	**198 151 806**
63	**198 151 767**	**198 151 777**	**198 153 067**	**198 151 787**	**198 151 797**	**198 151 807**



Indicator cap

Size (mm)	Code
1-2	**198 806 639**
3-5	**198 806 640**



Compressor set

Model:

- Incl. diaphragm holder

d (mm)	Inch (inch)	DN (mm)	Code
20	1/2	15	**198 000 872**
25	3/4	20	**198 000 873**
32	1	25	**198 000 874**
40	1 1/4	32	**198 000 875**
50	1 1/2	40	**198 000 876**
63	2	50	**198 000 877**



Seal set

Model:

- Spindle seal and piston seal

Size (mm)	Diastar Six/ Ten/Sixteen Code	Only for Diastar Six DN40/DN50 Code
Gr. 1	**198 000 881**	
Gr. 2	**198 000 882**	
Gr. 3	**198 000 883**	**198 000 886**
Gr. 4	**198 000 884**	
Gr. 5	**198 000 885**	

Spare parts for hand-operated valves
Type 514/515/517/519





Bonnet complete

d (mm)	Size (inch)	DN (mm)	Standard configuration PN10 Code	For pressure tight housing PN10 Code	Standard configuration PN16 Code	For pressure tight housing PN16 Code
20	½	15	**198 151 742**	**198 151 752**	**198 151 842**	**198 151 852**
25	¾	20	**198 151 743**	**198 151 753**	**198 151 843**	**198 151 853**
32	1	25	**198 151 744**	**198 151 754**	**198 151 844**	**198 151 854**
40	1 ¼	32	**198 151 745**	**198 151 755**	**198 151 845**	**198 151 855**
50	1 ½	40	**198 151 746**	**198 151 756**	**198 151 846**	**198 151 856**
63	2	50	**198 151 747**	**198 151 757**	**198 151 847**	**198 151 857**



Spindle assembly

Model:

- Incl. spindle nut and operation unit

DN-DN (mm)	Code
15 - 20	**198 204 327**
25 - 32	**198 204 328**
40 - 50	**198 204 329**



Position indicator

d (mm)	Size (inch)	DN (mm)	Code
20	½	15	**167 484 992**
25	¾	20	**167 484 993**
32	1	25	**167 484 994**
40	1 ¼	32	**167 484 995**
50	1 ½	40	**167 484 996**
63	2	50	**167 484 997**



Hand wheel

Model:

- Without position indicator

DN (mm)	Code
15 - 20	**198 204 162**
25 - 32	**198 204 164**
40 - 50	**198 104 166**



Seal set

Model:

- For manual valve - pressure tight housing
- Incl. position indicator

d (mm)	Size (inch)	DN (mm)	EPDM Code
20	½	15	**198 000 892**
25	¾	20	**198 000 893**
32	1	25	**198 000 894**
40	1 ¼	32	**198 000 895**
50	1 ½	40	**198 000 896**
63	2	50	**198 000 897**

Special wrench for DV

d (mm)	DN (mm)	Code
20	15	**198 154 012**
25	20	**198 154 013**
32	25	**198 154 014**
40	32	**198 154 015**
50	40	**198 154 016**
63	50	**198 154 017**

Spare parts butterfly valves

Spare parts butterfly valve type 567/578

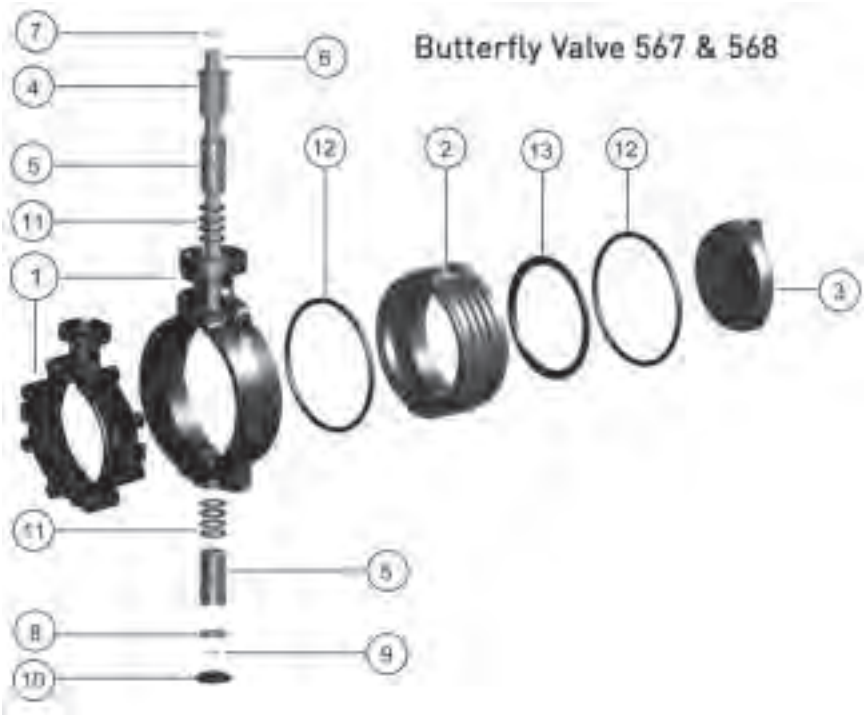



Inner body

Model:

- Inner body consisting of: inner body (2) and profile seal (13)

d (mm)	Size (inch)	DN (mm)	PVC-U EPDM Code	PVC-U FPM Code
63	2	50	**161 486 861**	**161 486 873**
75	2 ½	65	**161 486 862**	**161 486 874**
90	3	80	**161 486 863**	**161 486 875**
110	4	100	**161 486 864**	**161 486 876**
140	5	125	**161 486 865**	**161 486 877**
160	6	150	**161 486 866**	**161 486 878**
225	8	200	**161 486 867**	**161 486 879**
280	10	250	**161 486 868**	**161 486 880**
315	12	300	**161 486 869**	**161 486 881**



Disc (3)

d (mm)	Size (inch)	DN (mm)	PVC-U Code
63	2	50	**161 490 889**
75	2 ½	65	**161 490 890**
90	3	80	**161 490 891**
110	4	100	**161 490 892**
140	5	125	**161 490 893**
160	6	150	**161 490 894**
225	8	200	**161 490 895**
280	10	250	**161 490 896**
315	12	300	**161 490 897**



Bearing bush (5, 11)

Model:

- included in delivery 2 pcs.
- With o-ring
- Bearing bushes in PP-H are used in PP-H and ABS butterfly valves

d (mm)	Size (inch)	DN (mm)	PVC-U EPDM Code	PVC-U FPM Code
63	2	50	**161 486 886**	**161 486 892**
75	2 ½	65	**161 486 886**	**161 486 892**
90	3	80	**161 486 886**	**161 486 892**
110	4	100	**161 486 887**	**161 486 893**
140	5	125	**161 486 887**	**161 486 893**
160	6	150	**161 486 888**	**161 486 894**
225	8	200	**161 486 888**	**161 486 894**
280	10	250	**161 486 889**	**161 486 895**
315	12	300	**161 486 889**	**161 486 895**



Shaft set

Model:

- Shaft set consisting of: shaft chrom steel 1.4301 AISI 304 (6), retention ring (7, 9) and washer (8)

d (mm)	Size (inch)	DN (mm)	Code
63	2	50	**161 486 899**
75	2 ½	65	**161 486 900**
90	3	80	**161 486 901**
110	4	100	**161 486 902**
140	5	125	**161 486 903**
160	6	150	**161 486 904**
225	8	200	**161 486 905**
280	10	250	**161 486 906**
315	12	300	**161 486 907**
355	14	350	**161 486 908**
400	16	400	**161 486 909**
450	18	450	**161 486 926**
500	20	500	**161 486 927**
630	24	600	**161 486 928**



Hand lever

d (mm)	Size (inch)	DN (mm)	with index plate Code	with fine adjustment Code
63	2	50	**161 486 690**	**161 486 325**
75	2 ½	65	**161 486 690**	**161 486 325**
90	3	80	**161 486 690**	**161 486 325**
110	4	100	**161 486 691**	**161 486 326**
140	5	125	**161 486 691**	**161 486 326**
160	6	150	**161 486 694**	**161 486 327**
225	8	200	**161 486 695**	**161 486 328**
280	10	250	**161 486 697**	
315	12	300	**161 486 697**	



Reduction gear with handwheel

d (mm)	Size (inch)	DN (mm)	Code
75	2 ½	65	**161 482 408**
90	3	80	**161 482 408**
110	4	100	**161 482 408**
125	4 ½	125	**161 482 408**
160	6	150	**161 482 408**
225	8	200	**161 482 408**
280	10	250	**161 483 462**
315	12	300	**161 483 462**

Profile seal (13) DN350-600

d (mm)	Size (inch)	DN (mm)	EPDM Code	FPM Code
355	14	350	**748 440 018**	**749 440 028**
400	16	400	**748 440 019**	**749 440 029**
450	18	450	**748 440 020**	**749 440 030**
500	20	500	**748 440 021**	**749 440 031**
630	24	600	**748 440 022**	**749 440 032**

Intermediate element
Gear operated with handwheel 567/568

d (mm)	DN (mm)	Code
63	50	**198 000 621**
75	65	**198 000 621**
90	80	**198 000 621**
110	100	**198 000 622**
140	125	**198 000 622**
160	150	**198 000 599**
225	200	**198 000 599**
280	250	**198 000 880**
315	300	**198 000 880**

Spare parts Process control valves

Pressure regulating valve type 582/586





Cartridge type 582

DN (mm)	PVC-U EPDM Code	PVC-U FPM Code
10-15	**161 489 131**	**161 489 231**
20-25	**161 489 133**	**161 489 233**
32-50	**161 489 136**	**161 489 236**



Cartridge type 586

DN (mm)	PVC-U EPDM Code	PVC-U FPM Code
10-15	**161 489 161**	**161 489 261**
20-25	**161 489 163**	**161 489 263**
32-50	**161 489 166**	**161 489 266**

Cover cap

DN (mm)	Type	Code
10-15	582/586	**198 806 391**
20-25	582/586	**198 806 393**
32-50	582/586	**198 806 396**

Manometer adapter

Model:

- For mediaseparation from pressure gauge to process medium
- Diaphragm PTFE/EPDM

DN (mm)	EPDM/FPM Code	FPM white (HP) Code
10-50	**198 806 650**	**198 806 654**

Manometer

Model:

- Display with double scale: 0-4 bar / 0-58 psi, size: ø 40mm
- Display with double scale: 0-10bar / 0-150psi, size: ø 40mm
- Connection G 1/4 center back mount

DN (mm)	Material	EPDM/FPM 0-10bar Code	FPM white (HP) 0-10bar Code	EPDM/FPM 0-4bar Code
10-50	Brass	**198 806 651**	**198 806 655**	**198 806 963**
10-50	Stainless Steel	**198 806 652**	**198 806 656**	**198 806 962**

Manometer plug

- For maintenance

DN (mm)	Code
10-50	**198 806 653**

Hook wrench

DN (mm)	Type	Code
10-15	582/586	**198 806 451**
20-25	582/586	**198 806 452**
32-50	582/586	**198 806 453**

Pressure reducing valve type V82

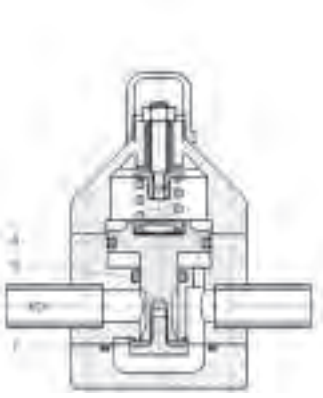

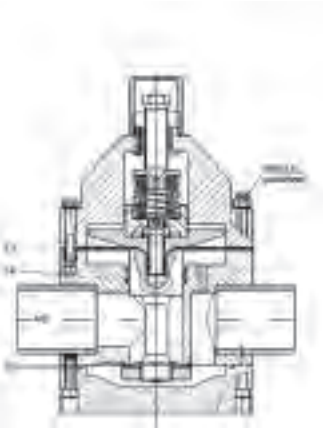

Model:

- Spare part kit contains: diaphragm and o-rings

Type	DN-DN (mm)	EPDM Code	PTFE Code
V82	65	**700 254 404**	**700 254 308**
V82	80	**700 254 405**	**700 254 309**
V82	100	**700 254 406**	**700 254 310**

Pressure relief valve type V85

Model:

- Spare part kit contains: diaphragm

Type	DN-DN (mm)	EPDM Code	PTFE Code
V85	65	**700 254 336**	**700 254 342**
V85	80	**700 254 337**	**700 254 343**
V85	100	**700 254 338**	**700 254 344**

Pressure retaining valve type V86

Model:

- Spare part kit contains: diaphragm

Type	DN-DN (mm)	EPDM Code	PTFE Code
V86	65	**700 254 376**	**700 254 379**
V86	80	**700 254 377**	**700 254 380**
V86	100	**700 254 378**	**700 254 381**

Spare parts ventilating- and bleed valve type 591/595





Central part with spring

Model:

- Central body consisting of: housing (9), union bush (4), support ring (6), floater (7), spring Nimonic 90 Halar coated (8), profile seal ring (5) and face seal (3)

d (mm)	Size (inch)	DN (mm)	PVC-U EPDM Code	PVC-U FPM Code
16	⅜	10	**161 485 281**	**161 485 291**
20	½	15	**161 485 281**	**161 485 291**
25	¾	20	**161 485 282**	**161 485 292**
32	1	25	**161 485 283**	**161 485 293**
40	1 ¼	32	**161 485 284**	**161 485 294**
50	1 ½	40	**161 485 285**	**161 485 295**
63	2	50	**161 485 286**	**161 485 296**
75	2 ½	65	**161 485 287**	**161 485 297**
90	3	80	**161 485 288**	**161 485 298**
110	4	100	**161 485 289**	**161 485 299**



Central part without spring

Model:

- Central body consisting of: housing (9), union bush (4), support ring (6), floater PP-H/PVDF (7), profile seal ring (5) and face seal (3)

d (mm)	Size (inch)	DN (mm)	PVC-U EPDM Code	PVC-U FPM Code
16	⅜	10	**161 485 261**	**161 485 271**
20	½	15	**161 485 261**	**161 485 271**
25	¾	20	**161 485 262**	**161 485 272**
32	1	25	**161 485 263**	**161 485 273**
40	1 ¼	32	**161 485 264**	**161 485 274**
50	1 ½	40	**161 485 265**	**161 485 275**
63	2	50	**161 485 266**	**161 485 276**
75	2 ½	65	**161 485 267**	**161 485 277**
90	3	80	**161 485 268**	**161 485 278**
110	4	100	**161 485 269**	**161 485 279**



Cone (7)

Model:

- For type 595

d (mm)	Size (inch)	DN (mm)	PVC-U Code
16	⅜	10	**161 491 151**
25	¾	20	**161 491 152**
32	1	25	**161 941 153**
40	1 ¼	32	**161 491 154**
50	1 ½	40	**161 491 155**
63	2	50	**161 491 156**
75	2 ½	65	**161 491 157**
90	3	80	**161 491 158**
110	4	100	**161 491 159**



Floater (7)

Model:

- For type 591

d (mm)	Size (inch)	DN (mm)	PP-H Code	PVDF Code
16	⅜	10	**167 485 151**	**175 484 161**
20	½	15	**167 485 151**	**175 484 161**
25	¾	20	**167 485 152**	**175 484 162**
32	1	25	**167 485 153**	**175 484 163**
40	1 ¼	32	**167 485 154**	**175 484 164**
50	1 ½	40	**167 485 155**	**175 484 165**
63	2	50	**167 485 156**	**175 484 166**
75	2 ½	65	**167 485 157**	**175 484 167**
90	3	80	**167 485 158**	**175 484 168**
110	4	100	**167 485 159**	**175 484 169**



Protective cap (10)

Model:

- Protects the piping system from dirt particles out of the ambient airCan also be used as tool for opening and closing the valve union bushing

d (mm)	Size (inch)	DN (mm)	PP-GF Code
16	⅜	10	**167 485 361**
20	½	15	**167 485 361**
25	¾	20	**167 485 362**
32	1	25	**167 485 363**
40	1 ¼	32	**167 485 364**
50	1 ½	40	**167 485 365**
63	2	50	**167 485 366**
75	2 ½	65	**167 485 367**
90	3	80	**167 485 368**
110	4	100	**167 485 369**



Seal set

Model:

- Seal set consisting of: profile seal ring (5) and face seal (3)

d (mm)	Size (inch)	DN (mm)	EPDM Code	FPM Code
16	⅜	10	**161 485 241**	**161 485 251**
20	½	15	**161 485 241**	**161 485 251**
25	¾	20	**161 485 242**	**161 485 252**
32	1	25	**161 485 243**	**161 485 253**
40	1 ¼	32	**161 485 244**	**161 485 254**
50	1 ½	40	**161 485 245**	**161 485 255**
63	2	50	**161 485 246**	**161 485 256**
75	2 ½	65	**161 485 247**	**161 485 257**
90	3	80	**161 485 248**	**161 485 258**
110	4	100	**161 485 249**	**161 485 259**



Spring (8)

Model:

- Material: V2A, code: 1.4310, HALAR® coated

d (mm)	Size (inch)	DN (mm)	V2A, HALAR coated Code
16	⅜	10	**161 485 112**
20	½	15	**161 485 112**
25	¾	20	**161 485 112**
32	1	25	**161 485 113**
40	1 ¼	32	**161 485 114**
50	1 ½	40	**161 485 115**
63	2	50	**161 485 116**
75	2 ½	65	**161 485 117**
90	3	80	**161 485 118**
110	4	100	**161 485 119**





Handle for dismantling

d (mm)	Size (inch)	DN (mm)	red Code	black Code
16	⅜	10	**167 484 088**	**167 484 076**
20	½	15	**167 484 088**	**167 484 076**
25	¾	20	**167 484 089**	**167 484 077**
32	1	25	**167 484 090**	**167 484 078**
40	1 ¼	32	**167 484 091**	**167 484 079**
50	1 ½	40	**167 484 092**	**167 484 080**
63	2	50	**167 484 093**	**167 484 081**
75	2 ½	65	**167 484 094**	**167 484 082**
90	3	80	**167 484 095**	**167 484 083**
110	4	100	**167 484 096**	**167 484 084**

Spare parts cone check valves

Spare parts cone check valve type 561/562

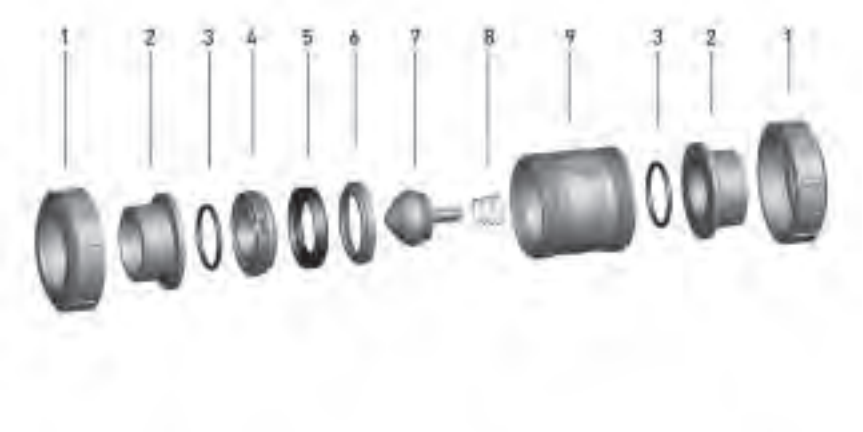



Central part without spring

Model:

- Central body consisting of: housing (9), union bush (4), support ring (6), cone (7), profile seal ring (5) and face seal (3)

d (mm)	Size (inch)	DN (mm)	PVC-U EPDM Code	PVC-U FPM Code
16	⅜	10	**161 485 201**	**161 485 211**
20	½	15	**161 485 201**	**161 485 211**
25	¾	20	**161 485 202**	**161 485 212**
32	1	25	**161 485 203**	**161 485 213**
40	1 ¼	32	**161 485 204**	**161 485 214**
50	1 ½	40	**161 485 205**	**161 485 215**
63	2	50	**161 485 206**	**161 485 216**
75	2 ½	65	**161 485 207**	**161 485 217**
90	3	80	**161 485 208**	**161 485 218**
110	4	100	**161 485 209**	**161 485 219**





Handle for dismantling

d (mm)	Size (inch)	DN (mm)	red Code	black Code
16	⅜	10	**167 484 088**	**167 484 076**
20	½	15	**167 484 088**	**167 484 076**
25	¾	20	**167 484 089**	**167 484 077**
32	1	25	**167 484 090**	**167 484 078**
40	1 ¼	32	**167 484 091**	**167 484 079**
50	1 ½	40	**167 484 092**	**167 484 080**
63	2	50	**167 484 093**	**167 484 081**
75	2 ½	65	**167 484 094**	**167 484 082**
90	3	80	**167 484 095**	**167 484 083**
110	4	100	**167 484 096**	**167 484 084**



Face seal (3)

d (mm)	Size (inch)	DN (mm)	EPDM Code	FPM Code
16	⅜	10	**748 410 059**	**749 410 059**
20	½	15	**748 410 059**	**749 410 059**
25	¾	20	**748 410 106**	**749 410 106**

table continued on the next page

d (mm)	Size (inch)	DN (mm)	EPDM Code	FPM Code
32	1	25	**748 410 151**	**749 410 151**
40	1 ¼	32	**748 410 062**	**749 410 062**
50	1 ½	40	**748 410 003**	**749 410 003**
63	2	50	**748 410 231**	**749 410 231**
75	2 ½	65	**748 410 119**	**749 410 119**
90	3	80	**748 410 023**	**749 410 023**
110	4	100	**748 410 254**	**749 410 254**



Seal set

Model:

- Seal set consisting of: profile seal ring (5) and face seal (3)

d (mm)	Size (inch)	DN (mm)	EPDM Code	FPM Code
16	⅜	10	**161 485 241**	**161 485 251**
20	½	15	**161 485 241**	**161 485 251**
25	¾	20	**161 485 242**	**161 485 252**
32	1	25	**161 485 243**	**161 485 253**
40	1 ¼	32	**161 485 244**	**161 485 254**
50	1 ½	40	**161 485 245**	**161 485 255**
63	2	50	**161 485 246**	**161 485 256**
75	2 ½	65	**161 485 247**	**161 485 257**
90	3	80	**161 485 248**	**161 485 258**
110	4	100	**161 485 249**	**161 485 259**



Profile seal ring (5)

d (mm)	Size (inch)	DN (mm)	EPDM Code	FPM Code
16	⅜	10	**748 436 001**	**749 436 001**
20	½	15	**748 436 001**	**749 436 001**
25	¾	20	**748 436 002**	**749 436 002**
32	1	25	**748 436 003**	**749 436 003**
40	1 ¼	32	**748 436 004**	**749 436 004**
50	1 ½	40	**748 436 005**	**749 436 005**
63	2	50	**748 436 006**	**749 436 006**
75	2 ½	65	**748 436 007**	**749 436 007**
90	3	80	**748 436 008**	**749 436 008**
110	4	100	**748 436 009**	**749 436 009**



Cone (7)

d (mm)	Size (inch)	DN (mm)	PVC-U Code
16	⅜	10	**161 491 151**
20	½	15	**161 491 151**
25	¾	20	**161 491 152**
32	1	25	**161 491 153**
40	1 ¼	32	**161 491 154**
50	1 ½	40	**161 491 155**
63	2	50	**161 491 156**
75	2 ½	65	**161 491 157**
90	3	80	**161 491 158**
110	4	100	**161 491 159**



Spring (8)

Model:

- Material: NIMONIC 90, code: 2.4632
- Material: V2A, code: 1.4310, HALAR® coated
- Material: V2A, code: 1.4310

d (mm)	Size (inch)	DN (mm)	Stainless steel V2A Code	V2A HALAR coated Code	NIMONIC 90 Code
16	⅜	10	**161 485 132**	**161 485 142**	**161 485 152**
20	½	15	**161 485 132**	**161 485 142**	**161 485 152**
25	¾	20	**161 485 132**	**161 485 142**	**161 485 152**
32	1	25	**161 485 133**	**161 485 143**	**161 485 153**
40	1 ¼	32	**161 485 134**	**161 485 144**	**161 485 154**
50	1 ½	40	**161 485 135**	**161 485 145**	**161 485 155**
63	2	50	**161 485 136**	**161 485 146**	**161 485 156**
75	2 ½	65	**161 485 137**	**161 485 147**	**161 485 157**
90	3	80	**161 485 138**	**161 485 148**	**161 485 158**
110	4	100	**161 485 139**	**161 485 149**	**161 485 159**



Central part with spring

Model:

- Central body consisting of: housing (9), union bush (4), support ring (6), cone (7), spring V2A (8), profile seal ring (5) and face seal (3)

d (mm)	Size (inch)	DN (mm)	PVC-U EPDM Code	PVC-U FPM Code
16	⅜	10	**161 485 221**	**161 485 231**
20	½	15	**161 485 221**	**161 485 231**
25	¾	20	**161 485 222**	**161 485 232**
32	1	25	**161 485 223**	**161 485 233**
40	1 ¼	32	**161 485 224**	**161 485 234**
50	1 ½	40	**161 485 225**	**161 485 235**
63	2	50	**161 485 226**	**161 485 236**
75	2 ½	65	**161 485 227**	**161 485 237**
90	3	80	**161 485 228**	**161 485 238**
110	4	100	**161 485 229**	**161 485 239**

Spare parts wafer check valves

Spare parts wafer check valve type 369





Seal set (1)

d (mm)	Size (inch)	DN (mm)	EPDM Code	FPM Code
40	1 ¼	32		**161 484 887**
50	1 ½	40	**161 484 876**	**161 484 888**
63	2	50	**161 484 877**	**161 484 889**
75	2 ½	65	**161 484 878**	**161 484 890**
90	3	80	**161 484 879**	**161 484 891**
110	4	100	**161 484 880**	**161 484 892**
140	5	125	**161 484 881**	**161 484 893**
160	6	150	**161 484 882**	**161 484 894**
225	8	200	**161 484 883**	**161 484 895**
280	10	250	**161 484 884**	**161 484 896**
315	12	300	**161 484 885**	**161 484 897**



Disc set (2)

d (mm)	Size (inch)	DN (mm)	PVC-U EPDM Code	PVC-U FPM Code
40	1 ¼	32	**161 369 122**	**161 369 142**
50	1 ½	40	**161 369 123**	**161 369 143**
63	2	50	**161 369 124**	**161 369 144**
75	2 ½	65	**161 369 125**	**161 369 145**
90	3	80	**161 369 126**	**161 369 146**
110	4	100	**161 369 127**	**161 369 147**
140	5	125	**161 369 128**	**161 369 148**
160	6	150	**161 369 129**	**161 369 149**
225	8	200	**161 369 130**	**161 369 150**
280	10	250	**161 369 131**	**161 369 151**
315	12	300	**161 369 132**	**161 369 152**



Spring (3)

d (mm)	Size (inch)	DN (mm)	V4A Code	Hastelloy C Code
40	1 ¼	32	**161 484 900**	**161 484 912**
50	1 ½	40	**161 484 901**	**161 484 913**
63	2	50	**161 484 902**	**161 484 914**
75	2 ½	65	**161 484 903**	**161 484 915**
90	3	80	**161 484 904**	**161 484 916**
110	4	100	**161 484 905**	**161 484 917**
140	5	125	**161 484 905**	**161 484 917**
160	6	150	**161 484 907**	**161 484 919**
225	8	200	**161 484 908**	**161 484 920**
280	10	250	**161 484 909**	**161 484 921**
315	12	300	**161 484 910**	**161 484 922**

Spare parts angle seat valves

Spare parts angel seat valves type 300/301

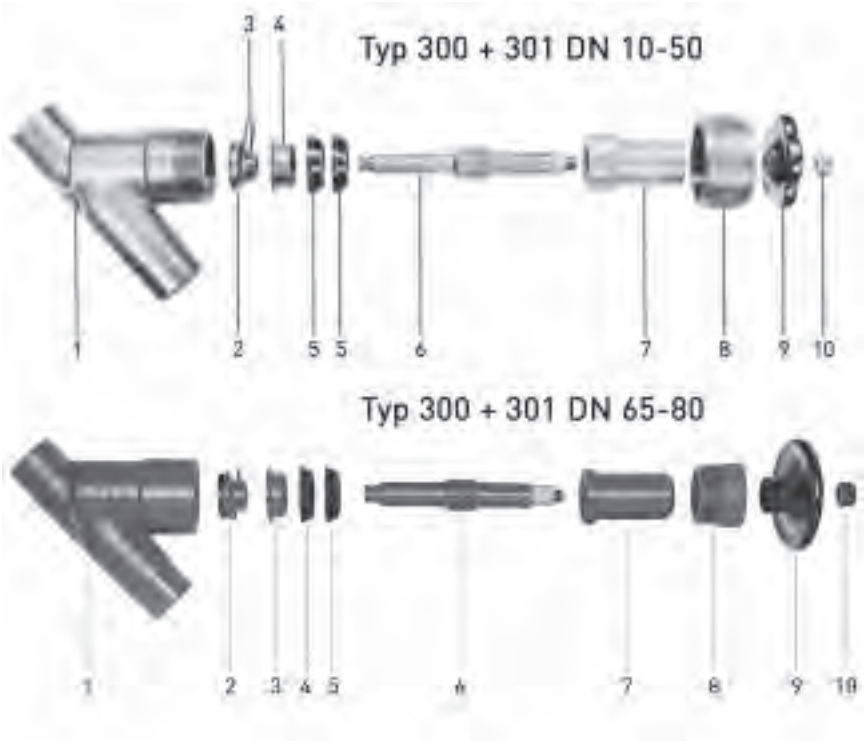



Bonnet complete

Model:

- Bonnet complete consisting of: seal element PVC-U and seating PE, retaining pin, seal support ring, stem, threaded bush, union nut and handwheel nut in PVC-U, cup seal and handwheel in PE (2 -10)

d (mm)	Size (inch)	DN (mm)	PVC-U/PE Code
16	⅜	10	**161 482 250**
20	½	15	**161 482 251**
25	¾	20	**161 482 252**
32	1	25	**161 482 253**
40	1 ¼	32	**161 482 254**
50	1 ½	40	**161 482 255**
63	2	50	**161 482 256**
75	2 ½	65	**161 482 257**
90	3	80	**161 482 258**



Body (1)

d (mm)	Size (inch)	DN (mm)	PVC-U Code	PVC-U transparent Code
16	⅜	10	**161 300 251**	
20	½	15	**161 300 301**	**192 480 001**
25	¾	20	**161 300 351**	**192 480 002**
32	1	25	**161 300 401**	**192 301 401**
40	1 ¼	32	**161 300 451**	**192 301 451**
50	1 ½	40	**161 300 501**	**192 301 501**
63	2	50	**161 300 551**	**192 301 551**
75	2 ½	65	**161 300 601**	
90	3	80	**161 300 651**	**192 301 651**



Plug

Model:

- DN65-DN80 (8)

d (mm)	Size (inch)	DN (mm)	PVC-U Code
75	2 ½	65	**161 300 608**
90	3	80	**161 300 658**



Handwheel (9)

d (mm)	Size (inch)	DN (mm)	Code
16	⅜	10	**161 300 259**
20	½	15	**161 300 309**
25	¾	20	**161 300 309**
32	1	25	**161 300 409**
40	1 ¼	32	**161 300 459**
50	1 ½	40	**161 300 509**
63	2	50	**161 300 559**
75	2 ½	65	**161 300 609**
90	3	80	**161 300 659**



Handwheel nut (10)

d (mm)	Size (inch)	DN (mm)	PVC-U Code
16	⅜	10	**161 300 260**
20	½	15	**721 960 603**
25	¾	20	**721 960 603**
32	1	25	**721 960 603**
40	1 ¼	32	**721 960 604**
50	1 ½	40	**721 960 604**
63	2	50	**721 960 605**
75	2 ½	65	**721 960 606**
90	3	80	**721 960 607**



Stem set

Model:

- Stem set consisting of: stem and threaded bush (6, 7)

d (mm)	Size (inch)	DN (mm)	PVC-U Code
16	⅜	10	**161 483 062**
20	½	15	**161 483 063**
25	¾	20	**161 483 064**
32	1	25	**161 483 065**
40	1 ¼	32	**161 483 066**
50	1 ½	40	**161 483 067**
63	2	50	**161 483 068**
75	2 ½	65	**161 483 069**
90	3	80	**161 483 070**



Union nut

Model:

- DN10-DN50 (8)

d (mm)	Size (inch)	DN (mm)	PVC-U Code
16	⅜	10	**161 300 258**
20	½	15	**161 300 308**
25	¾	20	**161 300 358**
32	1	25	**161 300 408**
40	1 ¼	32	**161 300 458**
50	1 ½	40	**161 300 508**
63	2	50	**161 300 558**



Disc retaining pin set

Model:

- Disc retaining pin set consisting of: seal element and seating, retaining pin, screen support and cup seal (2-5)

d (mm)	Size (inch)	DN (mm)	PE Code	PTFE Code
16	⅜	10	**161 483 076**	**161 483 089**
20	½	15	**161 483 077**	**161 483 090**
25	¾	20	**161 483 078**	**161 483 091**
32	1	25	**161 483 079**	**161 483 092**
40	1 ¼	32	**161 483 080**	**161 483 093**
50	1 ½	40	**161 483 081**	**161 483 094**
63	2	50	**161 483 082**	**161 483 095**
75	2 ½	65	**161 483 083**	**161 483 096**
90	3	80	**161 483 084**	**161 483 097**

Spare parts angle seat valve type 303/304

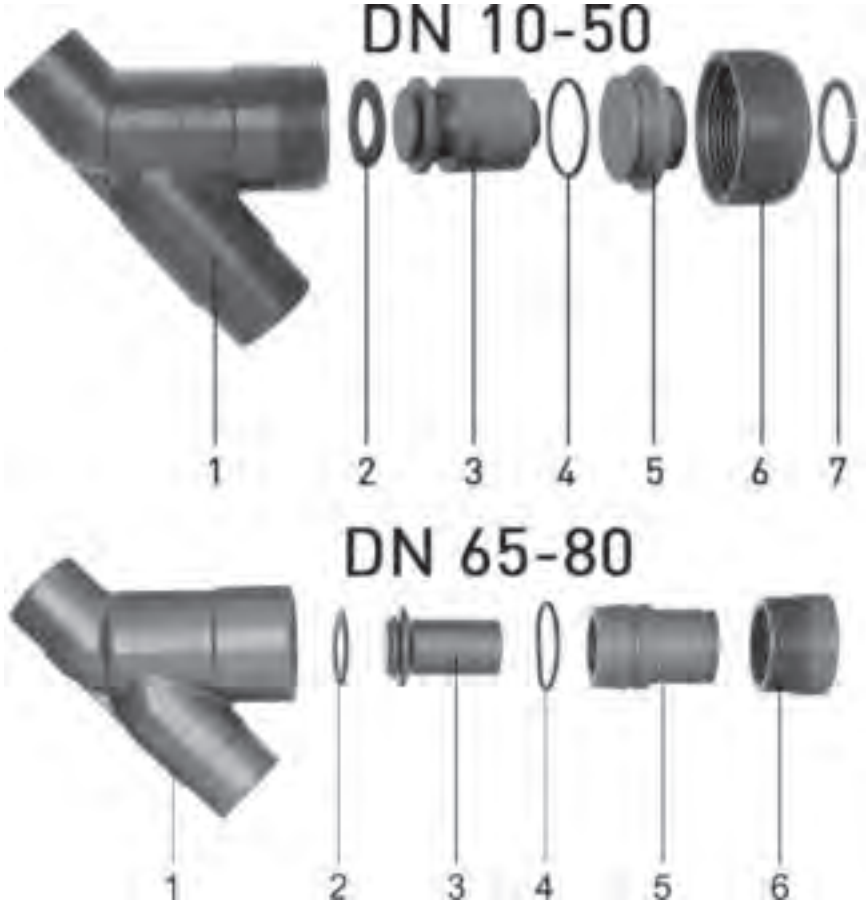



Body (1)

d (mm)	Size (inch)	DN (mm)	PVC-U Code	PVC-U transparent Code
16	⅜	10	**161 480 699**	
20	½	15	**161 480 700**	**192 480 001**
25	¾	20	**161 480 701**	**192 480 002**
32	1	25	**161 300 401**	**192 301 401**
40	1 ¼	32	**161 300 451**	**192 301 451**
50	1 ½	40	**161 300 501**	**192 301 501**
63	2	50	**161 300 551**	**192 301 551**
75	2 ½	65	**161 300 601**	
90	3	80	**161 300 651**	**192 301 651**



Closure plug (5)

d (mm)	Size (inch)	DN (mm)	PVC-U Code
16	⅜	10	**161 480 648**
20	½	15	**161 480 649**
25	¾	20	**161 480 650**
32	1	25	**161 480 651**
40	1 ¼	32	**161 480 652**
50	1 ½	40	**161 480 653**
63	2	50	**161 480 654**
75	2 ½	65	**161 490 412**
90	3	80	**161 490 413**



Plug

Model:

- DN65-DN80 (6)

d (mm)	Size (inch)	DN (mm)	PVC-U Code
75	2 ½	65	**161 305 604**
90	3	80	**161 305 654**



Flat gasket (2)

d (mm)	Size (inch)	DN (mm)	EPDM Code	FPM Code
16	⅜	10	**161 480 664**	**161 480 673**
20	½	15	**161 480 665**	**161 480 674**
25	¾	20	**161 480 666**	**161 480 675**
32	1	25	**161 480 667**	**161 480 676**
40	1 ¼	32	**161 480 668**	**161 480 677**
50	1 ½	40	**161 480 669**	**161 480 678**
63	2	50	**161 480 670**	**161 480 679**
75	2 ½	65	**161 480 671**	**161 480 680**
90	3	80	**161 480 672**	**161 480 681**



Circlip (7)

d (mm)	Size (inch)	DN (mm)	PVC-U Code
16	⅜	10	**161 482 076**
20	½	15	**161 482 017**
25	¾	20	**161 482 018**
32	1	25	**161 482 019**
40	1 ¼	32	**161 482 020**
50	1 ½	40	**161 482 021**
63	2	50	**161 482 022**



Union nut

Model:

- DN10-DN50 (6)

d (mm)	Size (inch)	DN (mm)	PVC-U Code
16	⅜	10	**161 300 258**
20	½	15	**161 300 308**
25	¾	20	**161 300 358**
32	1	25	**161 300 408**
40	1 ¼	32	**161 300 458**
50	1 ½	40	**161 300 508**
63	2	50	**161 300 558**



O-ring (4)

d (mm)	Size (inch)	DN (mm)	EPDM Code	FPM Code
16	⅜	10	**748 410 059**	**749 410 059**
20	½	15	**748 410 106**	**749 410 106**
25	¾	20	**748 410 001**	**749 410 001**

table continued on the next page

d (mm)	Size (inch)	DN (mm)	EPDM Code	FPM Code
32	1	25	**748 410 007**	**749 410 007**
40	1 ¼	32	**748 410 002**	**749 410 002**
50	1 ½	40	**748 410 102**	**749 410 102**
63	2	50	**748 410 101**	**749 410 101**
75	2 ½	65	**748 410 119**	**749 410 119**
90	3	80	**748 410 014**	**749 410 014**



Piston (3)

d (mm)	Size (inch)	DN (mm)	PVC-U Code
16	⅜	10	**161 480 682**
20	½	15	**161 480 683**
25	¾	20	**161 480 684**
32	1	25	**161 480 685**
40	1 ¼	32	**161 480 686**
50	1 ½	40	**161 480 687**
63	2	50	**161 480 688**
75	2 ½	65	**161 480 689**
90	3	80	**161 480 690**

Spare parts solenoid valves

Spare parts solenoid valve type 157

Wear part set

	EPDM Code	FPM Code
e.g. diaphragm	**198 808 012**	**198 808 013**

Coil set

Voltage	Function	EPDM Code	FPM Code
24V DC	A	**198 808 000**	**198 808 006**
24V DC	B	**198 808 001**	**198 808 007**
24V UC	A	**198 808 002**	**198 808 008**
24V UC	B	**198 808 003**	**198 808 009**
230V AC	A	**198 808 004**	**198 808 010**
230V AC	B	**198 808 005**	**198 808 011**

Spare parts solenoid valve type 160/161

Wear part set

d (mm)	DN (mm)	EPDM Code	FPM Code
16	10	**198 808 023**	**198 808 026**
20	15	**198 808 024**	**198 808 027**
25	20	**198 808 025**	**198 808 028**

Spare part kit

Function	UC Code	50Hz Code
A	**198 808 017**	**198 808 021**
B	**198 808 018**	
E	**198 808 019**	
F	**198 808 020**	**198 808 022**

Coil set

24V UC Code	230 V UC Code	230 V/ 50Hz Code
198 808 014	**198 808 015**	**198 808 016**

Spare parts solenoid valve type 166

Wear part set

	EPDM Code	FPM Code
e.g. diaphragm	**198 808 053**	**198 808 054**

Coil set

Function	Voltage	EPDM Code	FPM Code
A	24V DC	**198 808 041**	**198 808 047**
A	230V AC	**198 808 042**	**198 808 048**
C	24V DC	**198 808 043**	
C	24V UC		**198 808 049**
C	230V AC	**198 808 044**	**198 808 050**
E	24V DC	**198 808 045**	**198 808 051**
E	230V AC	**198 808 046**	**198 808 052**

Spare parts solenoid valve type 165

Wear part set

d-d (mm)	DN-DN (mm)	EPDM Code	FPM Code
20 - 25	15 - 20	**198 808 035**	**198 808 038**
32 - 40	25 - 32	**198 808 036**	**198 808 039**
50 - 63	40 - 50	**198 808 037**	**198 808 040**

Coil set

Voltage	EPDM Code	FPM Code
24V DC	**198 808 029**	**198 808 032**
230V AC	**198 808 030**	**198 808 033**
110V AC	**198 808 031**	**198 808 034**

Spare parts variable area flow meters

Variable area flow meter type 350

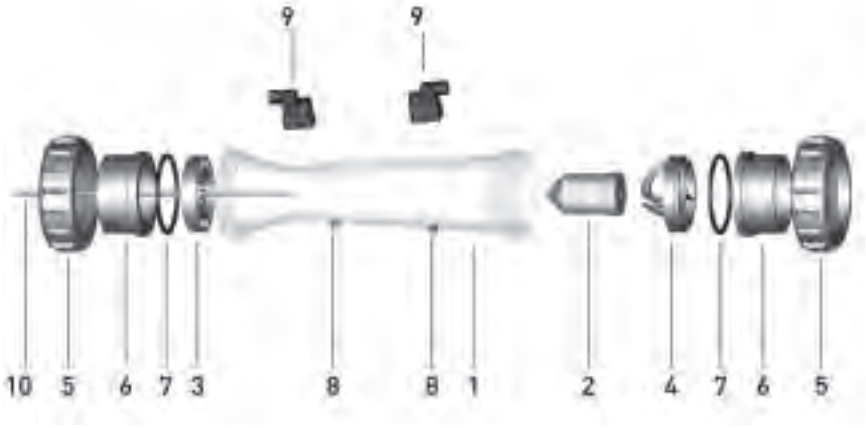



Taper tube with water scale (1)

d (mm)	Size (inch)	DN (mm)	Scale range (l/min)	PVC-U transparent Code	Polyamid Code	Polysulfon Code
32	1	25	50 - 500	**198 350 055**	**198 350 070**	**198 350 085**
32	1	25	100 - 1000	**198 350 056**	**198 350 071**	**198 350 086**
40	1 ¼	32	150 - 1500	**198 350 057**	**198 350 072**	**198 350 087**
40	1 ¼	32	250 - 2500	**198 350 058**	**198 350 073**	**198 350 088**
50	1 ½	40	200 - 2000	**198 350 059**	**198 350 074**	**198 350 089**
50	1 ½	40	300 - 3000	**198 350 060**	**198 350 075**	**198 350 090**
50	1 ½	40	600 - 6000	**198 350 061**	**198 350 076**	**198 350 091**
63	2	50	600 - 6000	**198 350 062**	**198 350 077**	**198 350 092**
63	2	50	1000 - 10000	**198 350 063**	**198 350 078**	**198 350 093**
63	2	50	1500 - 15000	**198 350 064**	**198 350 079**	**198 350 094**
75	2 ½	65	2000 - 20000	**198 350 065**	**198 350 080**	**198 350 095**
75	2 ½	65	3000 - 30000	**198 350 066**	**198 350 081**	**198 350 096**
75	2 ½	65	8000 - 60000	**198 350 067**	**198 350 082**	**198 350 097**



Taper tube without scale (1)

d (mm)	Size (inch)	DN (mm)	Scale range (l/h)	PVC-U transparent Code	Polyamid Code	Polysulfon Code
32	1	25	50 - 500	**198 350 255**	**198 350 270**	**198 350 285**
32	1	25	100 - 1000	**198 350 256**	**198 350 271**	**198 350 286**
40	1 ¼	32	150 - 1500	**198 350 257**	**198 350 272**	**198 350 287**
40	1 ¼	32	250 - 2500	**198 350 258**	**198 350 273**	**198 350 288**
50	1 ½	40	200 - 2000	**198 350 259**	**198 350 274**	**198 350 289**
50	1 ½	40	300 - 3000	**198 350 260**	**198 350 275**	**198 350 290**
50	1 ½	40	600 - 6000	**198 350 261**	**198 350 276**	**198 350 291**
63	2	50	600 - 6000	**198 350 262**	**198 350 277**	**198 350 292**
63	2	50	1000 - 10000	**198 350 263**	**198 350 278**	**198 350 293**
63	2	50	1500 - 15000	**198 350 264**	**198 350 279**	**198 350 294**
75	2 ½	65	2000 - 20000	**198 350 265**	**198 350 280**	**198 350 295**
75	2 ½	65	3000 - 30000	**198 350 266**	**198 350 281**	**198 350 296**
75	2 ½	65	8000 - 60000	**198 350 267**	**198 350 282**	**198 350 297**



Insert PVDF (3,4)

d (mm)	Size (inch)	DN (mm)	Scale range (l/h)	top (4) Code	bottom (3) Code
32	1	25	50 - 500	**198 335 970**	**198 335 977**
32	1	25	100 - 1000	**198 335 970**	**198 335 977**
40	1 ¼	32	150 - 1500	**198 335 971**	**198 335 978**
40	1 ¼	32	250 - 2500	**198 335 971**	**198 335 978**
50	1 ½	40	200 - 2000	**198 335 972**	**198 335 979**
50	1 ½	40	300 - 3000	**198 335 972**	**198 335 979**
50	1 ½	40	600 - 6000	**198 335 972**	**198 335 979**
63	2	50	600 - 6000	**198 335 973**	**198 335 980**
63	2	50	1000 - 10000	**198 335 973**	**198 335 980**
63	2	50	1500 - 15000	**198 335 974**	
75	2 ½	65	2000 - 20000	**198 335 975**	
75	2 ½	65	3000 - 30000	**198 335 975**	
75	2 ½	65	8000 - 60000	**198 335 975**	



Float PVDF (2)

d (mm)	Size (inch)	DN (mm)	Scale range (l/h)	Without magnet Code	With magnet Code
32	1	25	50 - 500	**198 335 455**	**198 335 470**
32	1	25	100 - 1000	**198 335 455**	**198 335 470**
40	1 ¼	32	150 - 1500	**198 335 455**	**198 335 470**
40	1 ¼	32	250 - 2500	**198 335 455**	**198 335 470**
50	1 ½	40	200 - 2000	**198 335 456**	**198 335 471**
50	1 ½	40	300 - 3000	**198 335 457**	**198 335 471**
50	1 ½	40	600 - 6000	**198 335 457**	**198 335 471**
63	2	50	600 - 6000	**198 335 457**	**198 335 471**
63	2	50	1000 - 10000	**198 335 457**	**198 335 471**
63	2	50	1500 - 15000	**198 335 458**	**198 335 472**
75	2 ½	65	2000 - 20000	**198 335 459**	**198 335 473**
75	2 ½	65	3000 - 30000	**198 335 459**	**198 335 473**
75	2 ½	65	8000 - 60000	**198 335 460**	**198 335 474**



Guiding rod (10)

Model:

- Only for DN50 (1'500 - 15'000 l/h) and DN65 (all metering ranges)

d (mm)	Size (inch)	DN (mm)	Scale range (l/h)	Peek Code	Stainless steel Code	PVDF Code
63	2	50	1500 - 15000	**198 350 980**	**198 350 098**	**198 350 981**
75	2 ½	65	2000 - 20000	**198 350 980**	**198 350 098**	**198 350 981**
75	2 ½	65	3000 - 30000	**198 350 980**	**198 350 098**	**198 350 981**
75	2 ½	65	8000 - 60000	**198 350 980**	**198 350 098**	**198 350 981**



Insert guiding rod PVDF (for 10)

Model:

- Only for DN50 (1'500 - 15'000 l/h) and DN65 (all metering ranges)

d (mm)	Size (inch)	DN (mm)	Scale range (l/h)	for PEEK and stainless steel Code	for PVDF/ SS Code
63	2	50	1500 - 15000	**198 335 986**	**198 335 953**
75	2 ½	65	2000 - 20000	**198 335 987**	**198 335 954**
75	2 ½	65	3000 - 30000	**198 335 987**	**198 335 954**
75	2 ½	65	8000 - 60000	**198 335 987**	**198 335 954**



Flow value indicator PS (8)

Model:

- For all dimensions type 335/350

d (mm)	Size (inch)	DN (mm)	Flow value indicator Code
32	1	25	**198 335 990**
40	1 ¼	32	**198 335 990**
50	1 ½	40	**198 335 990**
63	2	50	**198 335 990**
75	2 ½	65	**198 335 990**



O-rings (7)

d (mm)	Size (inch)	DN (mm)	EPDM Code	FPM Code
32	1	25	**748 410 008**	**749 410 008**
40	1 ¼	32	**748 410 009**	**749 410 009**
50	1 ½	40	**748 410 010**	**749 410 010**
63	2	50	**748 410 011**	**749 410 011**
75	2 ½	65	**748 410 014**	**749 410 014**



Union nut (5)

Union nut not useable for the special version with taper tube in PVDF

d (mm)	Size (inch)	DN (mm)	PVC-U Code	ABS Code
32	1	25	**721 890 008**	
40	1 ¼	32	**721 890 009**	
50	1 ½	40	**721 890 010**	
63	2	50	**721 690 011**	
75	2 ½	65	**198 806 429**	



Union end / Socket (6)

For DN65 PVDF only spigot

d (mm)	Size (inch)	DN (mm)	PVC-U Code
32	1	25	**721 600 108**
40	1 ¼	32	**721 600 109**
50	1 ½	40	**721 600 110**
63	2	50	**721 600 111**
75	2 ½	65	**721 600 112**



Exchange kit

Model:

- Exchange kit consisting of: guiding rod (PVDF/V4A), insert guiding rod and insert bottom
- Only for DN50 (1'500 - 15'000 l/h) and DN65 (all metering ranges)

d (mm)	Size (inch)	DN (mm)	Scale range (l/h)	Code
63	2	50	1500 - 15000	**198 350 895**
75	2 ½	65	2000 - 20000	**198 350 896**
75	2 ½	65	3000 - 30000	**198 350 896**
75	2 ½	65	8000 - 80000	**198 350 896**

Variable area flow meter type 335

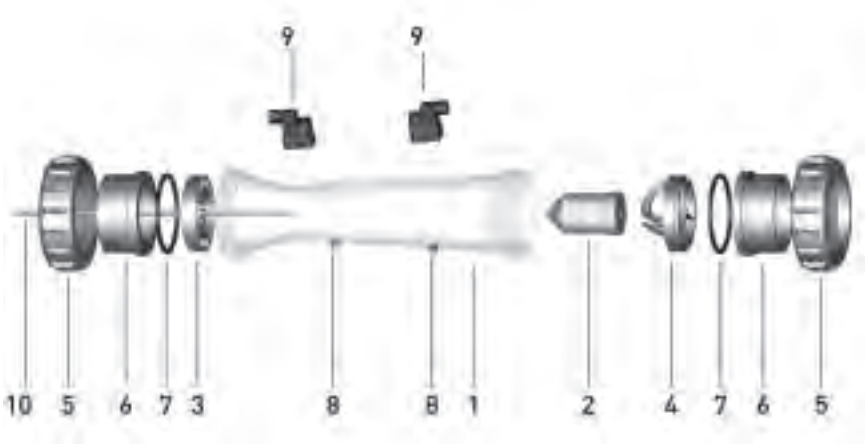



Taper tube with water scale (1)

- PVC-U transparent

d (mm)	Size (inch)	DN (mm)	Scale range (l/h)	PVC-U transparent Code	Polyamid Code	Polysulfon Code
32	1	25	50 - 500	**198 335 055**	**198 335 070**	**198 335 085**
32	1	25	100 - 1000	**198 335 056**	**198 335 071**	**198 335 086**
40	1 ¼	32	150 - 1500	**198 335 057**	**198 335 072**	**198 335 087**
40	1 ¼	32	250 - 2500	**198 335 058**	**198 335 073**	**198 335 088**
50	1 ½	40	200 - 2000	**198 335 059**	**198 335 074**	**198 335 089**
50	1 ½	40	300 - 3000	**198 335 060**	**198 335 075**	**198 335 090**
50	1 ½	40	600 - 6000	**198 335 061**	**198 335 076**	**198 335 091**
63	2	50	600 - 6000	**198 335 062**	**198 335 077**	**198 335 092**
63	2	50	1000 - 10000	**198 335 063**	**198 335 078**	**198 335 093**
63	2	50	1500 - 15000	**198 335 064**	**198 335 079**	**198 335 094**
75	2 ½	65	2000 - 20000	**198 335 065**	**198 335 080**	**198 335 095**
75	2 ½	65	3000 - 30000	**198 335 066**	**198 335 081**	**198 335 096**
75	2 ½	65	8000 - 60000	**198 335 067**	**198 335 082**	**198 335 097**



Taper tube without scale (1)

Scale range (l/h)	d (mm)	Size (inch)	DN (mm)	PVC-U transparent Code	Polyamid Code	Polysulfon Code
50 - 500	32	1	25	**198 335 255**	**198 335 270**	**198 335 285**
100 - 1000	32	1	25	**198 335 256**	**198 335 271**	**198 335 286**
150 - 1500	40	1 ¼	32	**198 335 257**	**198 335 272**	**198 335 287**
250 - 2500	40	1 ¼	32	**198 335 258**	**198 335 273**	**198 335 288**
200 - 2000	50	1 ½	40	**198 335 259**	**198 335 274**	**198 335 289**
300 - 3000	50	1 ½	40	**198 335 260**	**198 335 275**	**198 335 290**
600 - 6000	50	1 ½	40	**198 335 261**	**198 335 276**	**198 335 291**
600 - 6000	63	2	50	**198 335 262**	**198 335 277**	**198 335 292**
1000 - 10000	63	2	50	**198 335 263**	**198 335 278**	**198 335 293**
1500 - 15000	63	2	50	**198 335 264**	**198 335 279**	**198 335 294**
2000 - 20000	75	2 ½	65	**198 335 265**	**198 335 280**	**198 335 295**
3000 - 30000	75	2 ½	65	**198 335 266**	**198 335 281**	**198 335 296**
8000 - 60000	75	2 ½	65	**198 335 267**	**198 335 282**	**198 335 297**



Insert PVDF (3,4)

d (mm)	Size (inch)	DN (mm)	Scale range (l/h)	top (4) Code	bottom (3) Code	bottom (3) for PEEK guiding rod Code	bottom (3) for PVDF/ SS guiding rod Code
32	1	25	50 - 500	**198 335 970**	**198 335 977**		
32	1	25	100 - 1000	**198 335 970**	**198 335 977**		
40	1 ¼	32	150 - 1500	**198 335 971**	**198 335 978**		
40	1 ¼	32	250 - 2500	**198 335 971**	**198 335 978**		
50	1 ½	40	200 - 2000	**198 335 972**	**198 335 979**		
50	1 ½	40	300 - 3000	**198 335 972**	**198 335 979**		
50	1 ½	40	600 - 6000	**198 335 972**	**198 335 979**		
63	2	50	600 - 6000	**198 335 973**	**198 335 980**		
63	2	50	1000 - 10000	**198 335 973**	**198 335 980**		
63	2	50	1500 - 15000	**198 335 974**		**198 335 982**	**198 335 893**
75	2 ½	65	2000 - 20000	**198 335 975**		**198 335 981**	**198 335 894**
75	2 ½	65	3000 - 30000	**198 335 975**			
75	2 ½	65	8000 - 60000	**198 335 975**			



Float PVDF (2)

d (mm)	Size (inch)	DN (mm)	Scale range (l/h)	Without magnet Code	With magnet (bistabil) Code
32	1	25	50 - 500	**198 335 455**	**198 335 470**
32	1	25	100 - 1000	**198 335 455**	**198 335 470**
40	1 ¼	32	150 - 1500	**198 335 455**	**198 335 470**
40	1 ¼	32	250 - 2500	**198 335 455**	**198 335 470**
50	1 ½	40	200 - 2000	**198 335 456**	**198 335 471**
50	1 ½	40	300 - 3000	**198 335 457**	**198 335 471**
50	1 ½	40	600 - 6000	**198 335 457**	**198 335 471**
63	2	50	600 - 6000	**198 335 457**	**198 335 471**
63	2	50	1000 - 10000	**198 335 457**	**198 335 471**
63	2	50	1500 - 15000	**198 335 458**	**198 335 472**
75	2 ½	65	2000 - 20000	**198 335 459**	**198 335 473**
75	2 ½	65	3000 - 30000	**198 335 459**	**198 335 473**
75	2 ½	65	8000 - 60000	**198 335 460**	**198 335 474**



Guiding rod (10)

Model:

- Only for DN50 (1'500 - 15'000 l/h) and DN65 (all metering ranges)

d (mm)	Size (inch)	DN (mm)	Scale range (l/h)	Peek Code	Stainless steel (V4A) Code	PVDF Code
63	2	50	1500 - 15000	**198 335 985**	**198 335 098**	**198 335 984**
75	2 ½	65	2000 - 20000	**198 335 985**	**198 335 098**	**198 335 984**
75	2 ½	65	3000 - 30000	**198 335 985**	**198 335 098**	**198 335 984**
75	2 ½	65	8000 - 80000	**198 335 985**	**198 335 098**	**198 335 984**



Insert guiding rod PVDF (for 10)

Model:

- Only for DN50 (1'500 - 15'000 l/h) and DN65 (all metering ranges)

d (mm)	Size (inch)	DN (mm)	Scale range (l/h)	for PEEK Code	for PVDF/ SS Code
63	2	50	1500 - 15000	**198 335 986**	**198 335 953**
75	2 ½	65	2000 - 20000	**198 335 987**	**198 335 954**
75	2 ½	65	3000 - 30000	**198 335 987**	**198 335 954**
75	2 ½	65	8000 - 60000	**198 335 987**	**198 335 954**



Flow value indicator PS (8)

Model:

- For all dimensions type 335/350

d (mm)	Size (inch)	DN (mm)	Flow value indicator Code
32	1	25	**198 335 990**
40	1 ¼	32	**198 335 990**
50	1 ½	40	**198 335 990**
63	2	50	**198 335 990**
75	2 ½	65	**198 335 990**



O-rings (7)

d (mm)	Size (inch)	DN (mm)	EPDM Code	FPM Code
32	1	25	**748 410 008**	**749 410 008**
40	1 ¼	32	**748 410 009**	**749 410 009**
50	1 ½	40	**748 410 010**	**749 410 010**
63	2	50	**748 410 011**	**749 410 011**
75	2 ½	65	**748 410 014**	**749 410 014**



Union nut (5)

Union nut not useable for the special version with taper tube in PVDF

d (mm)	Size (inch)	DN (mm)	PVC-U Code
32	1	25	**721 690 008**
40	1 ¼	32	**721 690 009**
50	1 ½	40	**721 690 010**
63	2	50	**721 690 011**
75	2 ½	65	**198 806 429**



Union end / Socket (6)

For DN65 PVDF only spigot

d (mm)	Size (inch)	DN (mm)	PVC-U Code
32	1	25	**721 600 108**
40	1 ¼	32	**721 600 109**
50	1 ½	40	**721 600 110**
63	2	50	**721 600 111**
75	2 ½	65	**721 600 112**



Exchange kit

Model:

- Exchange kit consisting of: guiding rod (PVDF/V4A), insert guiding rod and insert bottom
- Only for DN50 (1'500 - 15'000 l/h) and DN65 (all metering ranges)

d (mm)	Size (inch)	DN (mm)	Scale range (l/h)	Code PVDF Code
63	2	50	1500 - 15000	**198 335 895**
75	2 ½	65	2000 - 20000	**198 335 896**
75	2 ½	65	3000 - 30000	**198 335 896**
75	2 ½	65	8000 - 80000	**198 335 896**

Spare part for variable area flow meter SK50-SK73/SK500-SK730

Short version taper tube Polysulfone

d (mm)	DN (mm)	Type	Code
16	10	SK 50 / 500	**198 801 341**
16	10	SK 51 / 510	**198 801 342**
16	10	SK 52 / 520	**198 801 343**
20	15	SK 60 / 600	**198 801 449**
20	15	SK 61 / 610	**198 801 450**
20	15	SK 62 / 620	**198 801 451**
32	25	SK 70 / 700	**198 801 445**
32	25	SK 71 / 710	**198 801 338**
32	25	SK 72 / 720	**198 801 339**
32	25	SK 73 / 730	**198 801 340**

Short version taper tube PVC-U transparent

d (mm)	DN (mm)	Type	Code
16	10	SK 50 / 500	**198 803 790**
16	10	SK 51 / 510	**198 803 791**
16	10	SK 52 / 520	**198 803 792**
20	15	SK 61 / 610	**198 803 794**
20	15	SK 62 / 620	**198 803 795**
32	25	SK 70 / 700	**198 803 796**

table continued on the next page

d (mm)	DN (mm)	Type	Code
32	25	SK 71 / 710	**198 803 797**
32	25	SK 72 / 720	**198 803 798**
32	25	SK 73 / 730	**198 803 799**
20	15	SK 60 / 600	**198 803 793**

Short version float PVDF
Without magnet

d (mm)	DN (mm)	Type	Code
16	10	SK 50 / 51 / 52	**198 806 219**
20	15	SK 60 / 61 / 62	**198 806 220**
32	25	SK 70 / 71 / 72 / 73	**198 806 221**

Short version float PVDF
With magnet bistable

d (mm)	DN (mm)	Type	Code
16	10	SK 500 / 510 / 520	**198 806 222**
20	15	SK 600 / 610 / 620	**198 806 223**
32	25	SK 700 / 710 / 720 / 730	**198 806 224**

Short version float PTFE
Without magnet

d (mm)	DN (mm)	Type	Code
32	25	SK 73	**198 807 166**

Short version top insert PVDF

d (mm)	DN (mm)	Type	Code
16	10	SK 50 / 500; 51 / 510; 52 / 520	**198 807 188**
20	15	SK 60 / 600; 61 / 610; 62 / 620	**198 807 187**
32	25	SK 70 / 700; 71 / 710; 72 / 720; 73 / 730	**198 807 182**

Index

Code	Page
160 100 250	282
160 100 300	282
160 100 350	282
161 017 037	20
161 017 038	20
161 017 039	20
161 017 040	20
161 017 041	20
161 017 042	20
161 017 043	20
161 017 044	20
161 017 045	20
161 017 046	20
161 017 047	20
161 017 048	20
161 017 060	19
161 017 061	19
161 017 062	19
161 017 063	19
161 017 064	19
161 017 065	19
161 017 066	19
161 017 067	19
161 017 068	19
161 017 069	19
161 017 070	19
161 017 071	19
161 017 072	19
161 017 073	19
161 017 074	19
161 017 082	17
161 017 083	17
161 017 084	17
161 017 085	17
161 017 086	17
161 017 087	17
161 017 088	17
161 017 089	17
161 017 090	17
161 017 091	17
161 017 092	17
161 017 093	17
161 017 094	17
161 017 095	17
161 017 096	17
161 017 097	17
161 017 098	17
161 017 104	16
161 017 105	16
161 017 106	16
161 017 107	16
161 017 108	16
161 017 109	16
161 017 110	16
161 017 111	16
161 017 112	16, 287
161 017 113	16
161 017 114	16
161 017 115	16
161 017 116	16, 287
161 017 117	16
161 017 126	16
161 017 127	16
161 017 128	16
161 017 129	16
161 017 130	16
161 017 131	16
161 017 132	16
161 017 133	16
161 017 134	16
161 017 135	16
161 017 136	16
161 017 137	16
161 017 138	16
161 017 139	16
161 018 036	287
161 018 038	287
161 018 039	287
161 018 042	287
161 018 045	287
161 018 059	287
161 018 060	287
161 018 061	287
161 018 063	287
161 018 064	287
161 018 080	287
161 018 082	287
161 018 083	287
161 018 084	287
161 018 085	287
161 018 086	287
161 018 087	287
161 018 088	287
161 018 089	287
161 018 255	288
161 018 256	288
161 018 257	288
161 018 258	288
161 018 259	288
161 018 260	288
161 018 261	288
161 050 026	278
161 050 027	278
161 050 028	278
161 050 029	278
161 050 030	278
161 050 031	278
161 050 032	278
161 050 033	278
161 050 034	278
161 050 053	417
161 050 206	53
161 050 207	53
161 050 208	53
161 050 209	53
161 050 210	53
161 050 211	53
161 050 212	53
161 050 213	53
161 050 214	53
161 050 226	304
161 050 227	304
161 050 228	304
161 050 229	304
161 050 230	304
161 050 231	304
161 050 245	53
161 050 246	53
161 050 247	53
161 050 248	53
161 050 249	53
161 050 250	53
161 050 251	53
161 050 345	52
161 050 346	52
161 050 347	52
161 050 348	52
161 050 349	52
161 050 350	52
161 050 351	52
161 050 385	52
161 050 386	52
161 050 387	52
161 050 388	52
161 050 389	52
161 050 390	52
161 050 391	52
161 050 445	51
161 050 446	51
161 050 447	51
161 050 448	51
161 050 449	51
161 050 450	51
161 050 451	51
161 090 002	418
161 090 003	418
161 090 016	417
161 090 017	417
161 090 018	418
161 090 019	418
161 090 024	417, 418
161 108 706	304
161 108 707	304
161 110 230	72
161 110 250	72
161 110 260	72
161 110 290	72
161 110 310	72
161 111 035	72
161 111 036	72
161 111 046	72
161 111 055	72
161 111 056	72
161 111 065	72
161 111 066	72
161 111 067	72
161 111 095	72
161 111 096	72
161 111 097	72
161 111 116	72
161 111 117	72
161 114 409	73
161 114 410	73
161 114 415	73
161 114 416	73
161 114 422	73
161 114 423	73
161 114 430	73
161 114 431	73
161 114 432	73
161 114 433	73
161 114 454	73
161 114 455	73
161 114 456	73
161 114 457	73
161 114 470	73
161 114 471	73
161 114 472	73
161 114 473	73
161 117 055	74
161 117 056	74
161 117 057	74
161 117 065	74
161 117 066	74
161 117 067	74
161 117 095	74
161 117 096	74
161 117 097	74
161 123 250	256
161 123 300	256
161 123 350	256
161 123 400	256
161 123 450	256
161 137 055	74
161 137 056	74
161 137 057	74
161 137 065	74
161 137 066	74
161 137 067	74
161 137 095	74
161 137 096	74
161 137 097	74
161 159 157	408
161 159 158	408
161 300 250	256
161 300 251	515
161 300 258	517, 519
161 300 259	516
161 300 260	516
161 300 299	256
161 300 300	256
161 300 301	515
161 300 308	517, 519
161 300 309	516, 516
161 300 349	256
161 300 350	256
161 300 351	515
161 300 358	517, 519
161 300 399	256
161 300 400	256
161 300 401	515, 518
161 300 408	517, 519
161 300 409	516
161 300 449	256
161 300 450	256
161 300 451	515, 518
161 300 458	517, 519
161 300 459	516

Index

Code	Page
161 300 499	256
161 300 500	256
161 300 501	515, 518
161 300 508	517, 519
161 300 509	516
161 300 549	256
161 300 550	256
161 300 551	515, 518
161 300 558	517, 519
161 300 559	516
161 300 599	256
161 300 600	256
161 300 601	515, 518
161 300 608	516
161 300 609	516
161 300 649	256
161 300 650	256
161 300 651	515, 518
161 300 658	516
161 300 659	516
161 300 699	256
161 300 716	414
161 300 717	414
161 300 718	414
161 300 719	414
161 300 720	414
161 300 721	414
161 300 741	414
161 300 742	414
161 300 743	414
161 300 744	414
161 300 745	414
161 300 746	414
161 300 766	414
161 300 767	414
161 300 768	414
161 300 769	414
161 300 770	414
161 300 771	414
161 300 791	414
161 300 792	414
161 300 793	414
161 300 794	414
161 300 795	414
161 300 796	414
161 300 800	470
161 300 801	470
161 300 802	470
161 300 803	470
161 300 804	470
161 300 805	470
161 300 806	470
161 300 807	470
161 300 808	470
161 303 005	257
161 303 006	257
161 303 007	257
161 303 008	257
161 303 009	257
161 303 010	257
161 303 011	257
161 303 012	257
161 303 013	257
161 303 015	471
161 303 016	471
161 303 017	471
161 303 018	471
161 303 019	471
161 303 020	471
161 303 021	471
161 303 022	471
161 303 023	471
161 303 030	257
161 303 031	257
161 303 032	257
161 303 033	257
161 303 034	257
161 303 035	257
161 303 036	257
161 303 037	257
161 303 038	257
161 303 040	471
161 303 041	471
161 303 042	471
161 303 043	471
161 303 044	471
161 303 045	471
161 303 046	471
161 303 047	471
161 303 048	471
161 303 102	415
161 303 103	415
161 303 104	415
161 303 105	415
161 303 106	415
161 303 107	415
161 303 117	415
161 303 118	415
161 303 119	415
161 303 120	415
161 303 121	415
161 303 122	415
161 303 123	415
161 303 124	415
161 305 300	275
161 305 336	276
161 305 337	277
161 305 338	277
161 305 339	277
161 305 349	275
161 305 350	275
161 305 386	276
161 305 387	277
161 305 388	277
161 305 389	277
161 305 399	275
161 305 400	275
161 305 436	276
161 305 437	277
161 305 438	277
161 305 439	277
161 305 449	275
161 305 450	275
161 305 486	276
161 305 487	277
161 305 488	277
161 305 489	277
161 305 499	275
161 305 500	275
161 305 536	276
161 305 537	277
161 305 538	277
161 305 539	277
161 305 549	275
161 305 550	275
161 305 586	276
161 305 587	277
161 305 588	277
161 305 589	277
161 305 599	275
161 305 600	275
161 305 604	519
161 305 636	276
161 305 637	277
161 305 638	277
161 305 639	277
161 305 649	275
161 305 650	275
161 305 654	519
161 305 686	276
161 305 687	277
161 305 688	277
161 305 689	277
161 305 699	275
161 317 009	186
161 317 010	186
161 317 012	186
161 317 024	186
161 317 025	186
161 317 027	186
161 317 039	186
161 317 040	186
161 317 042	186
161 317 054	186
161 317 055	186
161 317 057	186
161 317 069	186
161 317 070	186
161 317 072	186
161 317 424	455
161 317 425	455
161 317 427	455
161 317 439	455
161 317 440	455
161 317 442	455
161 317 508	186
161 317 523	186
161 317 538	186
161 317 553	186
161 317 568	186
161 317 723	455
161 317 738	455
161 317 824	380
161 317 825	380
161 317 827	380
161 317 839	380
161 317 840	380
161 317 868	380
161 317 883	380
161 322 150	181
161 322 199	181
161 322 200	181
161 322 249	181
161 324 150	377
161 324 199	377
161 324 200	377
161 324 249	377
161 369 002	253
161 369 003	253
161 369 004	253
161 369 005	253
161 369 006	253
161 369 007	253
161 369 009	253
161 369 010	253
161 369 011	253
161 369 012	253
161 369 013	253
161 369 022	253
161 369 023	253
161 369 024	253
161 369 025	253
161 369 026	253
161 369 027	253
161 369 029	253
161 369 030	253
161 369 031	253
161 369 032	253
161 369 033	253
161 369 042	255
161 369 043	255
161 369 044	255
161 369 045	255
161 369 046	255
161 369 047	255
161 369 049	255
161 369 050	255
161 369 051	255
161 369 052	255
161 369 053	255
161 369 062	255
161 369 063	255
161 369 064	255
161 369 065	255
161 369 066	255
161 369 067	255
161 369 069	255
161 369 070	255
161 369 071	255
161 369 072	255
161 369 073	255
161 369 082	254
161 369 083	254
161 369 084	254
161 369 085	254
161 369 086	254
161 369 087	254
161 369 089	254

Index

Code	Page
161 369 090	254
161 369 091	254
161 369 092	254
161 369 093	254
161 369 102	254
161 369 103	254
161 369 104	254
161 369 105	254
161 369 106	254
161 369 107	254
161 369 109	254
161 369 110	254
161 369 111	254
161 369 112	254
161 369 113	254
161 369 122	513
161 369 123	513
161 369 124	513
161 369 125	513
161 369 126	513
161 369 127	513
161 369 128	513
161 369 129	513
161 369 130	513
161 369 131	513
161 369 132	513
161 369 142	513
161 369 143	513
161 369 144	513
161 369 145	513
161 369 146	513
161 369 147	513
161 369 148	513
161 369 149	513
161 369 150	513
161 369 151	513
161 369 152	513
161 480 648	518
161 480 649	518
161 480 650	518
161 480 651	518
161 480 652	518
161 480 653	518
161 480 654	518
161 480 664	519
161 480 665	519
161 480 666	519
161 480 667	519
161 480 668	519
161 480 669	519
161 480 670	519
161 480 671	519
161 480 672	519
161 480 673	519
161 480 674	519
161 480 675	519
161 480 676	519
161 480 677	519
161 480 678	519
161 480 679	519
161 480 680	519
161 480 681	519
161 480 682	520
161 480 683	520
161 480 684	520
161 480 685	520
161 480 686	520
161 480 687	520
161 480 688	520
161 480 689	520
161 480 690	520
161 480 699	518
161 480 700	518
161 480 701	518
161 482 017	519
161 482 018	519
161 482 019	519
161 482 020	519
161 482 021	519
161 482 022	519
161 482 076	519
161 482 250	515
161 482 251	515
161 482 252	515
161 482 253	515
161 482 254	515
161 482 255	515
161 482 256	515
161 482 257	515
161 482 258	515
161 482 408	503, 503, 503, 503, 503, 503
161 483 062	516
161 483 063	516
161 483 064	516
161 483 065	516
161 483 066	516
161 483 067	516
161 483 068	516
161 483 069	516
161 483 070	516
161 483 076	517
161 483 077	517
161 483 078	517
161 483 079	517
161 483 080	517
161 483 081	517
161 483 082	517
161 483 083	517
161 483 084	517
161 483 089	517
161 483 090	517
161 483 091	517
161 483 092	517
161 483 093	517
161 483 094	517
161 483 095	517
161 483 096	517
161 483 097	517
161 483 180	68
161 483 462	503, 503
161 484 876	513
161 484 877	513
161 484 878	513
161 484 879	513
161 484 880	513
161 484 881	513
161 484 882	513
161 484 883	513
161 484 884	513
161 484 885	513
161 484 887	513
161 484 888	513
161 484 889	513
161 484 890	513
161 484 891	513
161 484 892	513
161 484 893	513
161 484 894	513
161 484 895	513
161 484 896	513
161 484 897	513
161 484 900	514
161 484 901	514
161 484 902	514
161 484 903	514
161 484 904	514
161 484 905	514, 514
161 484 907	514
161 484 908	514
161 484 909	514
161 484 910	514
161 484 912	514
161 484 913	514
161 484 914	514
161 484 915	514
161 484 916	514
161 484 917	514, 514
161 484 919	514
161 484 920	514
161 484 921	514
161 484 922	514
161 485 112	509, 509, 509
161 485 113	509
161 485 114	509
161 485 115	509
161 485 116	509
161 485 117	509
161 485 118	509
161 485 119	509
161 485 132	512, 512, 512
161 485 133	512
161 485 134	512
161 485 135	512
161 485 136	512
161 485 137	512
161 485 138	512
161 485 139	512
161 485 142	512, 512, 512
161 485 143	512
161 485 144	512
161 485 145	512
161 485 146	512
161 485 147	512
161 485 148	512
161 485 149	512
161 485 152	512, 512, 512
161 485 153	512
161 485 154	512
161 485 155	512
161 485 156	512
161 485 157	512
161 485 158	512
161 485 159	512
161 485 201	510, 510
161 485 202	510
161 485 203	510
161 485 204	510
161 485 205	510
161 485 206	510
161 485 207	510
161 485 208	510
161 485 209	510
161 485 211	510, 510
161 485 212	510
161 485 213	510
161 485 214	510
161 485 215	510
161 485 216	510
161 485 217	510
161 485 218	510
161 485 219	510
161 485 221	512, 512
161 485 222	512
161 485 223	512
161 485 224	512
161 485 225	512
161 485 226	512
161 485 227	512
161 485 228	512
161 485 229	512
161 485 231	512, 512
161 485 232	512
161 485 233	512
161 485 234	512
161 485 235	512
161 485 236	512
161 485 237	512
161 485 238	512
161 485 239	512
161 485 241	509, 509, 511, 511
161 485 242	509, 511
161 485 243	509, 511
161 485 244	509, 511
161 485 245	509, 511
161 485 246	509, 511
161 485 247	509, 511
161 485 248	509, 511
161 485 249	509, 511
161 485 251	509, 509, 511, 511
161 485 252	509, 511

Index

Code	Page
161 485 253	509, 511
161 485 254	509, 511
161 485 255	509, 511
161 485 256	509, 511
161 485 257	509, 511
161 485 258	509, 511
161 485 259	509, 511
161 485 261	507, 507
161 485 262	507
161 485 263	507
161 485 264	507
161 485 265	507
161 485 266	507
161 485 267	507
161 485 268	507
161 485 269	507
161 485 271	507, 507
161 485 272	507
161 485 273	507
161 485 274	507
161 485 275	507
161 485 276	507
161 485 277	507
161 485 278	507
161 485 279	507
161 485 281	507, 507
161 485 282	507
161 485 283	507
161 485 284	507
161 485 285	507
161 485 286	507
161 485 287	507
161 485 288	507
161 485 289	507
161 485 291	507, 507
161 485 292	507
161 485 293	507
161 485 294	507
161 485 295	507
161 485 296	507
161 485 297	507
161 485 298	507
161 485 299	507
161 485 351	492
161 485 353	492
161 485 361	492
161 485 363	492
161 486 151	486, 486
161 486 152	486
161 486 153	486
161 486 154	486
161 486 155	486
161 486 156	486
161 486 157	486
161 486 158	486
161 486 159	486
161 486 163	486, 486
161 486 164	486
161 486 165	486
161 486 166	486
161 486 167	486
161 486 168	486
161 486 169	486
161 486 170	486
161 486 171	486
161 486 325	502, 502, 502
161 486 326	502, 502
161 486 327	502
161 486 328	502
161 486 375	488, 488
161 486 376	488
161 486 377	488
161 486 378	488
161 486 379	488
161 486 380	488
161 486 381	488
161 486 382	488
161 486 383	488
161 486 385	488, 488
161 486 386	488
161 486 387	488
161 486 388	488
161 486 389	488
161 486 390	488
161 486 391	488
161 486 392	488
161 486 393	488
161 486 400	487
161 486 401	487
161 486 402	487
161 486 403	487
161 486 404	487
161 486 405	487
161 486 406	487
161 486 407	487
161 486 408	487
161 486 410	487
161 486 411	487
161 486 412	487
161 486 413	487
161 486 414	487
161 486 415	487
161 486 416	487
161 486 417	487
161 486 418	487
161 486 689	487
161 486 690	487, 502, 502, 502
161 486 691	487, 502, 502
161 486 694	502
161 486 695	502
161 486 697	502, 502
161 486 861	501
161 486 862	501
161 486 863	501
161 486 864	501
161 486 865	501
161 486 866	501
161 486 867	501
161 486 868	501
161 486 869	501
161 486 873	501
161 486 874	501
161 486 875	501
161 486 876	501
161 486 877	501
161 486 878	501
161 486 879	501
161 486 880	501
161 486 881	501
161 486 886	502, 502, 502
161 486 887	502, 502
161 486 888	502, 502
161 486 889	502, 502
161 486 892	502, 502, 502
161 486 893	502, 502
161 486 894	502, 502
161 486 895	502, 502
161 486 899	502
161 486 900	502
161 486 901	502
161 486 902	502
161 486 903	502
161 486 904	502
161 486 905	502
161 486 906	502
161 486 907	502
161 486 908	502
161 486 909	502
161 486 926	502
161 486 927	502
161 486 928	502
161 488 002	488, 488
161 488 003	488
161 488 004	488
161 488 005	488
161 488 006	488
161 488 007	488
161 488 012	488, 488
161 488 013	488
161 488 014	488
161 488 015	488
161 488 016	488
161 488 017	488
161 488 022	489, 489
161 488 023	489
161 488 024	489
161 488 025	489
161 488 026	489
161 488 027	489
161 488 032	489, 489
161 488 033	489
161 488 034	489
161 488 035	489
161 488 036	489
161 488 037	489
161 488 041	491
161 488 042	491
161 488 043	491
161 488 044	491
161 488 045	491
161 488 046	491
161 488 047	491
161 488 051	491
161 488 052	491
161 488 053	491
161 488 054	491
161 488 055	491
161 488 056	491
161 488 057	491
161 488 061	491
161 488 062	491
161 488 063	491
161 488 064	491
161 488 065	491
161 488 066	491
161 488 067	491
161 488 071	491
161 488 072	491
161 488 073	491
161 488 074	491
161 488 075	491
161 488 076	491
161 488 077	491
161 488 162	490, 490
161 488 163	490
161 488 164	490
161 488 165	490
161 488 166	490
161 488 167	490
161 488 172	490, 490
161 488 173	490
161 488 174	490
161 488 175	490
161 488 176	490
161 488 177	490
161 489 131	504
161 489 133	504
161 489 136	504
161 489 161	504
161 489 163	504
161 489 166	504
161 489 231	504
161 489 233	504
161 489 236	504
161 489 261	504
161 489 263	504
161 489 266	504
161 490 412	518
161 490 413	518
161 490 630	54, 56
161 490 632	54, 56
161 490 634	54, 56
161 490 635	54, 56
161 490 636	54, 56
161 490 637	54, 56
161 490 638	54, 56
161 490 639	54, 56
161 490 640	54, 56
161 490 641	54, 57
161 490 642	54, 57
161 490 643	54, 57
161 490 644	54, 57
161 490 889	501

Index

Code	Page
161 490 890	501
161 490 891	501
161 490 892	501
161 490 893	501
161 490 894	501
161 490 895	501
161 490 896	501
161 490 897	501
161 491 151	508, 511, 511
161 491 152	508, 511
161 491 153	511
161 491 154	508, 511
161 491 155	508, 511
161 491 156	508, 511
161 491 157	508, 511
161 491 158	508, 511
161 491 159	508, 511
161 492 062	494
161 492 063	494
161 492 064	494
161 492 065	494
161 492 066	494
161 492 067	494
161 492 072	495
161 492 073	495
161 492 074	495
161 492 075	495
161 492 076	495
161 492 077	495
161 514 001	182
161 514 002	182
161 514 003	182
161 514 004	182
161 514 005	182
161 514 006	182
161 514 007	182
161 514 011	182
161 514 012	182
161 514 013	182
161 514 014	182
161 514 015	182
161 514 016	182
161 514 017	182
161 514 021	449
161 514 022	449
161 514 023	449
161 514 024	449
161 514 025	449
161 514 026	449
161 514 027	449
161 514 031	182
161 514 032	182
161 514 033	182
161 514 034	182
161 514 035	182
161 514 036	182
161 514 037	182
161 514 061	182
161 514 062	182
161 514 063	182
161 514 064	182
161 514 065	182
161 514 066	182
161 514 067	182
161 514 071	449
161 514 072	449
161 514 073	449
161 514 074	449
161 514 075	449
161 514 076	449
161 514 077	449
161 514 402	183
161 514 403	183
161 514 404	183
161 514 405	183
161 514 406	183
161 514 407	183
161 514 412	183
161 514 413	183
161 514 414	183
161 514 415	183
161 514 416	183
161 514 417	183
161 514 422	451
161 514 423	451
161 514 424	451
161 514 425	451
161 514 426	451
161 514 427	451
161 514 432	183
161 514 433	183
161 514 434	183
161 514 435	183
161 514 436	183
161 514 437	183
161 514 462	184
161 514 463	184
161 514 464	184
161 514 465	184
161 514 466	184
161 514 467	184
161 514 472	451
161 514 473	451
161 514 474	451
161 514 475	451
161 514 476	451
161 514 477	451
161 514 502	378
161 514 503	378
161 514 504	378
161 514 505	378
161 514 506	378
161 514 507	378
161 514 512	378
161 514 513	378
161 514 514	378
161 514 515	378
161 514 516	378
161 514 517	378
161 514 522	450
161 514 523	450
161 514 524	450
161 514 525	450
161 514 526	450
161 514 527	450
161 514 532	378
161 514 533	378
161 514 534	378
161 514 535	378
161 514 536	378
161 514 537	378
161 514 562	378
161 514 563	378
161 514 564	378
161 514 565	378
161 514 566	378
161 514 567	378
161 514 572	450
161 514 573	450
161 514 574	450
161 514 575	450
161 514 576	450
161 514 577	450
161 514 812	378
161 514 813	378
161 514 814	378
161 514 815	378
161 514 816	378
161 514 817	378
161 514 822	451
161 514 823	451
161 514 824	451
161 514 825	451
161 514 826	451
161 514 827	451
161 514 832	378
161 514 833	378
161 514 834	378
161 514 835	378
161 514 836	378
161 514 837	378
161 514 872	451
161 514 873	451
161 514 874	451
161 514 875	451
161 514 876	451
161 514 877	451
161 514 912	379
161 514 913	379
161 514 914	379
161 514 915	379
161 514 916	379
161 514 917	379
161 514 922	452
161 514 923	452
161 514 924	452
161 514 925	452
161 514 926	452
161 514 927	452
161 514 932	379
161 514 933	379
161 514 934	379
161 514 935	379
161 514 936	379
161 514 937	379
161 514 972	452
161 514 973	452
161 514 974	452
161 514 975	452
161 514 976	452
161 514 977	452
161 515 002	184
161 515 003	184
161 515 004	184
161 515 005	184
161 515 006	184
161 515 007	184
161 515 012	184
161 515 013	184
161 515 014	184
161 515 015	184
161 515 016	184
161 515 017	184
161 515 022	453
161 515 023	453
161 515 024	453
161 515 025	453
161 515 026	453
161 515 027	453
161 515 032	184
161 515 033	184
161 515 034	184
161 515 035	184
161 515 036	184
161 515 037	184
161 515 062	184
161 515 063	184
161 515 064	184
161 515 065	184
161 515 066	184
161 515 067	184
161 515 072	453
161 515 073	453
161 515 074	453
161 515 075	453
161 515 076	453
161 515 077	453
161 517 002	185
161 517 003	185
161 517 004	185
161 517 005	185
161 517 006	185
161 517 007	185
161 517 012	185
161 517 013	185
161 517 014	185
161 517 015	185
161 517 016	185
161 517 017	185
161 517 022	453
161 517 023	453
161 517 024	453
161 517 025	453
161 517 026	453
161 517 027	453
161 517 032	185
161 517 033	185

Index

Code	Page
161 517 034	185
161 517 035	185
161 517 036	185
161 517 037	185
161 517 062	185
161 517 063	185
161 517 064	185
161 517 065	185
161 517 066	185
161 517 067	185
161 517 072	453
161 517 073	453
161 517 074	453
161 517 075	453
161 517 076	453
161 517 077	453
161 517 912	380
161 517 913	380
161 517 914	380
161 517 915	380
161 517 916	380
161 517 917	380
161 517 922	454
161 517 923	454
161 517 924	454
161 517 925	454
161 517 926	454
161 517 927	454
161 517 932	380
161 517 933	380
161 517 934	380
161 517 935	380
161 517 936	380
161 517 937	380
161 517 972	454
161 517 973	454
161 517 974	454
161 517 975	454
161 517 976	454
161 517 977	454
161 523 001	447
161 523 002	447
161 523 011	447
161 523 012	447
161 523 041	447
161 523 042	447
161 523 051	447
161 523 052	447
161 523 401	179
161 523 402	179
161 523 411	179
161 523 412	179
161 523 421	180
161 523 422	180
161 523 431	180
161 523 432	180
161 523 441	179
161 523 442	179
161 523 451	179
161 523 452	179
161 523 501	376
161 523 502	376
161 523 511	376
161 523 512	376
161 523 562	376
161 523 572	376
161 523 582	448
161 523 592	448
161 543 001	150
161 543 002	150
161 543 003	150
161 543 004	150
161 543 005	150
161 543 006	150
161 543 007	150
161 543 011	150
161 543 012	150
161 543 013	150
161 543 014	150
161 543 015	150
161 543 016	150
161 543 017	150
161 543 021	151
161 543 022	151
161 543 023	151
161 543 024	151
161 543 025	151
161 543 026	151
161 543 027	151
161 543 031	151
161 543 032	151
161 543 033	151
161 543 034	151
161 543 035	151
161 543 036	151
161 543 037	151
161 543 041	152
161 543 042	152
161 543 043	152
161 543 044	152
161 543 045	152
161 543 046	152
161 543 047	152
161 543 051	152
161 543 052	152
161 543 053	152
161 543 054	152
161 543 055	152
161 543 056	152
161 543 057	152
161 543 061	356
161 543 062	356
161 543 063	356
161 543 064	356
161 543 065	356
161 543 066	356
161 543 067	356
161 543 071	356
161 543 072	356
161 543 073	356
161 543 074	356
161 543 075	356
161 543 076	356
161 543 077	356
161 543 122	357
161 543 123	357
161 543 124	357
161 543 125	357
161 543 126	357
161 543 127	357
161 543 132	357
161 543 133	357
161 543 134	357
161 543 135	357
161 543 136	357
161 543 137	357
161 543 141	431
161 543 142	431
161 543 143	431
161 543 144	431
161 543 145	431
161 543 146	431
161 543 147	431
161 543 151	431
161 543 152	431
161 543 153	431
161 543 154	431
161 543 155	431
161 543 156	431
161 543 157	431
161 543 161	159
161 543 162	159
161 543 163	159
161 543 164	159
161 543 165	159
161 543 166	159
161 543 167	159
161 543 171	159
161 543 172	159
161 543 173	159
161 543 174	159
161 543 175	159
161 543 176	159
161 543 177	159
161 543 201	153
161 543 202	153
161 543 203	153
161 543 204	153
161 543 205	153
161 543 206	153
161 543 207	153
161 543 211	153
161 543 212	153
161 543 213	153
161 543 214	153
161 543 215	153
161 543 216	153
161 543 217	153
161 543 221	154
161 543 222	154
161 543 223	154
161 543 224	154
161 543 225	154
161 543 226	154
161 543 227	154
161 543 231	154
161 543 232	154
161 543 233	154
161 543 234	154
161 543 235	154
161 543 236	154
161 543 237	154
161 543 241	155
161 543 242	155
161 543 243	155
161 543 244	155
161 543 245	155
161 543 246	155
161 543 247	155
161 543 251	155
161 543 252	155
161 543 253	155
161 543 254	155
161 543 255	155
161 543 256	155
161 543 257	155
161 543 261	358
161 543 262	358
161 543 263	358
161 543 264	358
161 543 265	358
161 543 266	358
161 543 267	358
161 543 271	358
161 543 272	358
161 543 273	358
161 543 274	358
161 543 275	358
161 543 276	358
161 543 277	358
161 543 322	359
161 543 323	359
161 543 324	359
161 543 325	359
161 543 326	359
161 543 327	359
161 543 332	359
161 543 333	359
161 543 334	359
161 543 335	359
161 543 336	359
161 543 337	359
161 543 341	432
161 543 342	432
161 543 343	432
161 543 344	432
161 543 345	432
161 543 346	432
161 543 347	432
161 543 351	432
161 543 352	432
161 543 353	432
161 543 354	432
161 543 355	432
161 543 356	432
161 543 357	432
161 543 361	160
161 543 362	160

Index

Code	Page
161 543 363	160
161 543 364	160
161 543 365	160
161 543 366	160
161 543 367	160
161 543 371	160
161 543 372	160
161 543 373	160
161 543 374	160
161 543 375	160
161 543 376	160
161 543 377	160
161 543 401	156
161 543 402	156
161 543 403	156
161 543 404	156
161 543 405	156
161 543 406	156
161 543 407	156
161 543 411	156
161 543 412	156
161 543 413	156
161 543 414	156
161 543 415	156
161 543 416	156
161 543 417	156
161 543 421	158
161 543 422	158
161 543 423	158
161 543 424	158
161 543 425	158
161 543 426	158
161 543 427	158
161 543 431	158
161 543 432	158
161 543 433	158
161 543 434	158
161 543 435	158
161 543 436	158
161 543 437	158
161 543 441	157
161 543 442	157
161 543 443	157
161 543 444	157
161 543 445	157
161 543 446	157
161 543 447	157
161 543 451	157
161 543 452	157
161 543 453	157
161 543 454	157
161 543 455	157
161 543 456	157
161 543 457	157
161 543 501	161
161 543 502	161
161 543 503	161
161 543 504	161
161 543 505	161
161 543 506	161
161 543 507	161
161 543 511	161
161 543 512	161
161 543 513	161
161 543 514	161
161 543 515	161
161 543 516	161
161 543 517	161
161 543 522	363
161 543 523	363
161 543 524	363
161 543 525	363
161 543 526	363
161 543 527	363
161 543 532	363
161 543 533	363
161 543 534	363
161 543 535	363
161 543 536	363
161 543 537	363
161 543 542	365
161 543 543	365
161 543 544	365
161 543 545	365
161 543 546	365
161 543 547	365
161 543 552	365
161 543 553	365
161 543 554	365
161 543 555	365
161 543 556	365
161 543 557	365
161 543 582	435
161 543 583	435
161 543 584	435
161 543 585	435
161 543 586	435
161 543 587	435
161 543 592	435
161 543 593	435
161 543 594	435
161 543 595	435
161 543 596	435
161 543 597	435
161 543 601	360
161 543 602	360
161 543 603	360
161 543 604	360
161 543 605	360
161 543 606	360
161 543 607	360
161 543 611	360
161 543 612	360
161 543 613	360
161 543 614	360
161 543 615	360
161 543 616	360
161 543 617	360
161 543 781	433
161 543 782	433
161 543 783	433
161 543 784	433
161 543 785	433
161 543 786	433
161 543 787	433
161 543 791	433
161 543 792	433
161 543 793	433
161 543 794	433
161 543 795	433
161 543 796	433
161 543 797	433
161 543 802	436
161 543 803	436
161 543 804	436
161 543 805	436
161 543 806	436
161 543 807	436
161 543 812	436
161 543 813	436
161 543 814	436
161 543 815	436
161 543 816	436
161 543 817	436
161 543 842	434
161 543 843	434
161 543 844	434
161 543 845	434
161 543 846	434
161 543 847	434
161 543 852	434
161 543 853	434
161 543 854	434
161 543 855	434
161 543 856	434
161 543 857	434
161 543 861	362
161 543 862	362
161 543 863	362
161 543 864	362
161 543 865	362
161 543 866	362
161 543 867	362
161 543 871	362
161 543 872	362
161 543 873	362
161 543 874	362
161 543 875	362
161 543 876	362
161 543 877	362
161 543 881	364
161 543 882	364
161 543 883	364
161 543 884	364
161 543 885	364
161 543 886	364
161 543 887	364
161 543 891	364
161 543 892	364
161 543 893	364
161 543 894	364
161 543 895	364
161 543 896	364
161 543 897	364
161 543 942	361
161 543 943	361
161 543 944	361
161 543 945	361
161 543 946	361
161 543 947	361
161 543 952	361
161 543 953	361
161 543 954	361
161 543 955	361
161 543 956	361
161 543 957	361
161 543 982	437
161 543 983	437
161 543 984	437
161 543 985	437
161 543 986	437
161 543 987	437
161 543 992	437
161 543 993	437
161 543 994	437
161 543 995	437
161 543 996	437
161 543 997	437
161 546 001	102
161 546 002	102
161 546 003	102
161 546 004	102
161 546 005	102
161 546 006	102
161 546 007	102
161 546 008	102, 310
161 546 009	102
161 546 010	102
161 546 011	102
161 546 012	102
161 546 013	102
161 546 014	102
161 546 015	102
161 546 016	102
161 546 017	102
161 546 018	102, 310
161 546 019	102
161 546 020	102
161 546 021	104
161 546 022	104
161 546 023	104
161 546 024	104
161 546 025	104
161 546 026	104
161 546 027	104
161 546 028	104
161 546 029	104
161 546 030	104
161 546 031	104
161 546 032	104
161 546 033	104
161 546 034	104
161 546 035	104
161 546 036	104
161 546 037	104
161 546 038	104
161 546 039	104
161 546 040	104

Index

Code	Page
161 546 041	103
161 546 042	103
161 546 043	103
161 546 044	103
161 546 045	103
161 546 046	103
161 546 047	103
161 546 048	103
161 546 049	103
161 546 050	103
161 546 051	103
161 546 052	103
161 546 053	103
161 546 054	103
161 546 055	103
161 546 056	103
161 546 057	103
161 546 058	103
161 546 059	103
161 546 060	103
161 546 061	98
161 546 062	98
161 546 063	98
161 546 064	98
161 546 065	98
161 546 066	98
161 546 067	98
161 546 068	98, 308
161 546 069	98
161 546 070	98
161 546 071	98
161 546 072	98
161 546 073	98
161 546 074	98
161 546 075	98
161 546 076	98
161 546 077	98
161 546 078	98, 308
161 546 079	98
161 546 080	98
161 546 081	105
161 546 082	105
161 546 083	105
161 546 084	105
161 546 085	105
161 546 086	105
161 546 087	105
161 546 088	105, 315
161 546 089	105
161 546 090	105
161 546 091	105
161 546 092	105
161 546 093	105
161 546 094	105
161 546 095	105
161 546 096	105
161 546 097	105
161 546 098	105, 315
161 546 099	105
161 546 100	105
161 546 108	101
161 546 109	101
161 546 110	101
161 546 118	101
161 546 119	101
161 546 120	101
161 546 128	425
161 546 129	425
161 546 130	425
161 546 138	425
161 546 139	425
161 546 140	425
161 546 201	310
161 546 202	310
161 546 203	310
161 546 204	310
161 546 205	310
161 546 206	310
161 546 207	310
161 546 209	310
161 546 210	310
161 546 211	310
161 546 212	310
161 546 213	310
161 546 214	310
161 546 215	310
161 546 216	310
161 546 217	310
161 546 219	310
161 546 220	310
161 546 221	315
161 546 222	315
161 546 223	315
161 546 224	315
161 546 225	315
161 546 226	315
161 546 227	315
161 546 229	315
161 546 230	315
161 546 231	315
161 546 232	315
161 546 233	315
161 546 234	315
161 546 235	315
161 546 236	315
161 546 237	315
161 546 239	315
161 546 240	315
161 546 241	308
161 546 242	308
161 546 243	308
161 546 244	308
161 546 245	308
161 546 246	308
161 546 247	308
161 546 249	308
161 546 250	308
161 546 251	308
161 546 252	308
161 546 253	308
161 546 254	308
161 546 255	308
161 546 256	308
161 546 257	308
161 546 259	308
161 546 260	308
161 546 268	314
161 546 269	314
161 546 270	314
161 546 278	314
161 546 279	314
161 546 280	314
161 546 402	311
161 546 403	311
161 546 404	311
161 546 405	311
161 546 406	311
161 546 407	311
161 546 408	311
161 546 409	311
161 546 410	311
161 546 412	311
161 546 413	311
161 546 414	311
161 546 415	311
161 546 416	311
161 546 417	311
161 546 418	311
161 546 419	311
161 546 420	311
161 546 422	313
161 546 423	313
161 546 424	313
161 546 425	313
161 546 426	313
161 546 427	313
161 546 428	313
161 546 429	313
161 546 430	313
161 546 432	313
161 546 433	313
161 546 434	313
161 546 435	313
161 546 436	313
161 546 437	313
161 546 438	313
161 546 439	313
161 546 440	313
161 546 448	316
161 546 449	316
161 546 450	316
161 546 468	429
161 546 469	429
161 546 470	429
161 546 478	429
161 546 479	429
161 546 480	429
161 546 482	312
161 546 483	312
161 546 484	312
161 546 485	312
161 546 486	312
161 546 487	312
161 546 492	312
161 546 493	312
161 546 494	312
161 546 495	312
161 546 496	312
161 546 497	312
161 546 502	428
161 546 503	428
161 546 504	428
161 546 505	428
161 546 506	428
161 546 507	428
161 546 508	428
161 546 509	428
161 546 510	428
161 546 512	428
161 546 513	428
161 546 514	428
161 546 515	428
161 546 516	428
161 546 517	428
161 546 518	428
161 546 519	428
161 546 520	428
161 546 522	430
161 546 523	430
161 546 524	430
161 546 525	430
161 546 526	430
161 546 527	430
161 546 528	430
161 546 529	430
161 546 530	430
161 546 532	430
161 546 533	430
161 546 534	430
161 546 535	430
161 546 536	430
161 546 537	430
161 546 538	430
161 546 539	430
161 546 540	430
161 546 601	426
161 546 602	426
161 546 603	426
161 546 604	426
161 546 605	426
161 546 606	426
161 546 607	426
161 546 608	426
161 546 609	426
161 546 610	426
161 546 611	426
161 546 612	426
161 546 613	426
161 546 614	426
161 546 615	426
161 546 616	426
161 546 617	426
161 546 618	426
161 546 619	426
161 546 620	426
161 546 721	99
161 546 722	99
161 546 723	99

Index

Code	Page
161 546 724	99
161 546 725	99
161 546 726	99
161 546 727	99
161 546 728	99
161 546 729	99
161 546 730	99
161 546 731	99
161 546 732	99
161 546 733	99
161 546 734	99
161 546 735	99
161 546 736	99
161 546 737	99
161 546 738	99
161 546 739	99
161 546 740	99
161 546 741	100
161 546 742	100
161 546 743	100
161 546 744	100
161 546 745	100
161 546 746	100
161 546 747	100
161 546 748	100
161 546 749	100
161 546 750	100
161 546 751	100
161 546 752	100
161 546 753	100
161 546 754	100
161 546 755	100
161 546 756	100
161 546 757	100
161 546 758	100
161 546 759	100
161 546 760	100
161 546 882	309
161 546 883	309
161 546 884	309
161 546 885	309
161 546 886	309
161 546 887	309
161 546 888	309
161 546 889	309
161 546 890	309
161 546 892	309
161 546 893	309
161 546 894	309
161 546 895	309
161 546 896	309
161 546 897	309
161 546 898	309
161 546 899	309
161 546 900	309
161 546 902	427
161 546 903	427
161 546 904	427
161 546 905	427
161 546 906	427
161 546 907	427
161 546 908	427
161 546 909	427
161 546 910	427
161 546 912	427
161 546 913	427
161 546 914	427
161 546 915	427
161 546 916	427
161 546 917	427
161 546 918	427
161 546 919	427
161 546 920	427
161 546 922	429
161 546 923	429
161 546 924	429
161 546 925	429
161 546 926	429
161 546 927	429
161 546 932	429
161 546 933	429
161 546 934	429
161 546 935	429
161 546 936	429
161 546 937	429
161 546 948	101
161 546 949	101
161 546 950	101
161 546 958	101
161 546 959	101
161 546 960	101
161 561 008	410
161 561 018	410
161 561 021	244
161 561 022	244
161 561 023	244
161 561 024	244
161 561 025	244
161 561 026	244
161 561 027	244
161 561 028	244
161 561 029	244
161 561 030	244
161 561 031	244
161 561 032	244
161 561 033	244
161 561 034	244
161 561 035	244
161 561 036	244
161 561 037	244
161 561 038	244
161 561 039	244
161 561 040	244
161 561 041	243
161 561 042	243
161 561 043	243
161 561 044	243
161 561 045	243
161 561 046	243
161 561 047	243
161 561 048	243
161 561 049	243
161 561 050	243
161 561 051	243
161 561 052	243
161 561 053	243
161 561 054	243
161 561 055	243
161 561 056	243
161 561 057	243
161 561 058	243
161 561 059	243
161 561 060	243
161 561 061	410
161 561 062	410
161 561 063	410
161 561 064	410
161 561 065	410
161 561 066	410
161 561 067	410
161 561 069	410
161 561 070	410
161 561 071	410
161 561 072	410
161 561 073	410
161 561 074	410
161 561 075	410
161 561 076	410
161 561 077	410
161 561 079	410
161 561 080	410
161 561 082	245
161 561 083	245
161 561 084	245
161 561 085	245
161 561 086	245
161 561 087	245
161 561 092	245
161 561 093	245
161 561 094	245
161 561 095	245
161 561 096	245
161 561 097	245
161 561 201	466
161 561 202	466
161 561 203	466
161 561 204	466
161 561 205	466
161 561 206	466
161 561 207	466
161 561 208	466
161 561 209	466
161 561 210	466
161 561 211	466
161 561 212	466
161 561 213	466
161 561 214	466
161 561 215	466
161 561 216	466
161 561 217	466
161 561 218	466
161 561 219	466
161 561 220	466
161 561 221	467
161 561 222	467
161 561 223	467
161 561 224	467
161 561 225	467
161 561 226	467
161 561 227	467
161 561 228	467
161 561 229	467
161 561 230	467
161 561 231	467
161 561 232	467
161 561 233	467
161 561 234	467
161 561 235	467
161 561 236	467
161 561 237	467
161 561 238	467
161 561 239	467
161 561 240	467
161 561 302	411
161 561 303	411
161 561 304	411
161 561 305	411
161 561 306	411
161 561 307	411
161 561 308	411
161 561 309	411
161 561 310	411
161 561 323	411
161 561 324	411
161 561 325	411
161 561 326	411
161 561 327	411
161 561 408	245
161 561 409	245
161 561 410	245
161 561 418	245
161 561 419	245
161 561 420	245
161 561 428	246
161 561 429	246
161 561 430	246
161 561 438	246
161 561 439	246
161 561 440	246
161 561 901	247
161 561 902	247
161 561 903	247
161 561 904	247
161 561 905	247
161 561 906	247
161 561 907	247
161 562 001	248
161 562 002	248
161 562 003	248
161 562 004	248
161 562 005	248
161 562 006	248
161 562 007	248
161 562 008	248, 412
161 562 009	248
161 562 010	248
161 562 011	248
161 562 012	248

Index

Code	Page
161 562 013	248
161 562 014	248
161 562 015	248
161 562 016	248
161 562 017	248
161 562 018	248, 412
161 562 019	248
161 562 020	248
161 562 021	250
161 562 022	250
161 562 023	250
161 562 024	250
161 562 025	250
161 562 026	250
161 562 027	250
161 562 028	250
161 562 029	250
161 562 030	250
161 562 031	250
161 562 032	250
161 562 033	250
161 562 034	250
161 562 035	250
161 562 036	250
161 562 037	250
161 562 038	250
161 562 039	250
161 562 040	250
161 562 041	249
161 562 042	249
161 562 043	249
161 562 044	249
161 562 045	249
161 562 046	249
161 562 047	249
161 562 048	249
161 562 049	249
161 562 050	249
161 562 051	249
161 562 052	249
161 562 053	249
161 562 054	249
161 562 055	249
161 562 056	249
161 562 057	249
161 562 058	249
161 562 059	249
161 562 060	249
161 562 061	412
161 562 062	412
161 562 063	412
161 562 064	412
161 562 065	412
161 562 066	412
161 562 067	412
161 562 069	412
161 562 070	412
161 562 071	412
161 562 072	412
161 562 073	412
161 562 074	412
161 562 075	412

Code	Page
161 562 076	412
161 562 077	412
161 562 079	412
161 562 080	412
161 562 082	251
161 562 083	251
161 562 084	251
161 562 085	251
161 562 086	251
161 562 087	251
161 562 092	251
161 562 093	251
161 562 094	251
161 562 095	251
161 562 096	251
161 562 097	251
161 562 201	468
161 562 202	468
161 562 203	468
161 562 204	468
161 562 205	468
161 562 206	468
161 562 207	468
161 562 208	468
161 562 209	468
161 562 210	468
161 562 211	468
161 562 212	468
161 562 213	468
161 562 214	468
161 562 215	468
161 562 216	468
161 562 217	468
161 562 218	468
161 562 219	468
161 562 220	468
161 562 221	469
161 562 222	469
161 562 223	469
161 562 224	469
161 562 225	469
161 562 226	469
161 562 227	469
161 562 228	469
161 562 229	469
161 562 230	469
161 562 231	469
161 562 232	469
161 562 233	469
161 562 234	469
161 562 235	469
161 562 236	469
161 562 237	469
161 562 238	469
161 562 239	469
161 562 240	469
161 562 302	413
161 562 303	413
161 562 304	413
161 562 305	413
161 562 306	413
161 562 307	413

Code	Page
161 562 308	413
161 562 309	413
161 562 310	413
161 562 323	413
161 562 324	413
161 562 325	413
161 562 326	413
161 562 327	413
161 562 408	251
161 562 409	251
161 562 410	251
161 562 418	251
161 562 419	251
161 562 420	251
161 562 428	252
161 562 429	252
161 562 430	252
161 562 438	252
161 562 439	252
161 562 440	252
161 567 002	210
161 567 003	210
161 567 004	210
161 567 005	210
161 567 006	210
161 567 007	210
161 567 008	210
161 567 009	210
161 567 010	210
161 567 022	210
161 567 023	210
161 567 024	210
161 567 025	210
161 567 026	210
161 567 027	210
161 567 028	210
161 567 029	210
161 567 030	210
161 567 042	211
161 567 043	211
161 567 044	211
161 567 045	211
161 567 046	211
161 567 047	211
161 567 048	211
161 567 049	211
161 567 050	211
161 567 051	211
161 567 052	211
161 567 062	211
161 567 063	211
161 567 064	211
161 567 065	211
161 567 066	211
161 567 067	211
161 567 068	211
161 567 069	211
161 567 070	211
161 567 071	211
161 567 072	211
161 567 402	463
161 567 403	463

Code	Page
161 567 404	463
161 567 405	463
161 567 406	463
161 567 407	463
161 567 408	463
161 567 422	463
161 567 423	463
161 567 424	463
161 567 425	463
161 567 426	463
161 567 427	463
161 567 428	463
161 567 502	464
161 567 503	464
161 567 504	464
161 567 505	464
161 567 506	464
161 567 507	464
161 567 508	464
161 567 802	212
161 567 803	212
161 567 804	212
161 567 805	212
161 567 806	212
161 567 807	212
161 567 808	212
161 567 809	212
161 567 810	212
161 567 811	212
161 567 812	212
161 567 822	212
161 567 823	212
161 567 824	212
161 567 825	212
161 567 826	212
161 567 827	212
161 567 828	212
161 567 829	212
161 567 830	212
161 567 831	212
161 567 832	212
161 578 002	220
161 578 003	220
161 578 004	220
161 578 005	220
161 578 006	220
161 578 007	220
161 578 008	220
161 578 009	220
161 578 010	220
161 578 022	220
161 578 023	220
161 578 024	220
161 578 025	220
161 578 026	220
161 578 027	220
161 578 028	220
161 578 029	220
161 578 030	220
161 578 042	221
161 578 043	221
161 578 044	221

Index

Code	Page
161 578 045	221
161 578 046	221
161 578 047	221
161 578 048	221
161 578 049	221
161 578 050	221
161 578 062	221
161 578 063	221
161 578 064	221
161 578 065	221
161 578 066	221
161 578 067	221
161 578 068	221
161 578 069	221
161 578 070	221
161 578 402	465
161 578 403	465
161 578 404	465
161 578 405	465
161 578 406	465
161 578 407	465
161 578 408	465
161 578 409	465
161 578 410	465
161 578 422	465
161 578 423	465
161 578 424	465
161 578 425	465
161 578 426	465
161 578 427	465
161 578 428	465
161 578 429	465
161 578 430	465
161 578 802	222
161 578 803	222
161 578 804	222
161 578 805	222
161 578 806	222
161 578 807	222
161 578 808	222
161 578 809	222
161 578 810	222
161 578 822	222
161 578 823	222
161 578 824	222
161 578 825	222
161 578 826	222
161 578 827	222
161 578 828	222
161 578 829	222
161 578 830	222
161 582 001	232
161 582 002	232
161 582 003	232
161 582 004	232
161 582 005	232
161 582 006	232
161 582 007	232
161 582 011	232
161 582 012	232
161 582 013	232
161 582 014	232
161 582 015	232
161 582 016	232
161 582 017	232
161 582 021	232
161 582 022	232
161 582 023	232
161 582 024	232
161 582 025	232
161 582 026	232
161 582 027	232
161 582 031	232
161 582 032	232
161 582 033	232
161 582 034	232
161 582 035	232
161 582 036	232
161 582 037	232
161 582 101	231
161 582 102	231
161 582 103	231
161 582 104	231
161 582 105	231
161 582 106	231
161 582 107	231
161 582 111	231
161 582 112	231
161 582 113	231
161 582 114	231
161 582 115	231
161 582 116	231
161 582 117	231
161 582 121	230
161 582 122	230
161 582 123	230
161 582 124	230
161 582 125	230
161 582 126	230
161 582 127	230
161 582 131	230
161 582 132	230
161 582 133	230
161 582 134	230
161 582 135	230
161 582 136	230
161 582 137	230
161 582 302	403
161 582 303	403
161 582 304	403
161 582 305	403
161 582 306	403
161 582 307	403
161 582 312	403
161 582 313	403
161 582 314	403
161 582 315	403
161 582 316	403
161 582 317	403
161 582 322	401
161 582 323	401
161 582 324	401
161 582 325	401
161 582 326	401
161 582 327	401
161 582 332	401
161 582 333	401
161 582 334	401
161 582 335	401
161 582 336	401
161 582 337	401
161 582 402	404
161 582 403	404
161 582 404	404
161 582 405	404
161 582 406	404
161 582 407	404
161 582 412	404
161 582 413	404
161 582 414	404
161 582 415	404
161 582 416	404
161 582 417	404
161 582 422	402
161 582 423	402
161 582 424	402
161 582 425	402
161 582 426	402
161 582 427	402
161 582 432	402
161 582 433	402
161 582 434	402
161 582 435	402
161 582 436	402
161 582 437	402
161 586 001	235
161 586 002	235
161 586 003	235
161 586 004	235
161 586 005	235
161 586 006	235
161 586 007	235
161 586 011	235
161 586 012	235
161 586 013	235
161 586 014	235
161 586 015	235
161 586 016	235
161 586 017	235
161 586 101	234
161 586 102	234
161 586 103	234
161 586 104	234
161 586 105	234
161 586 106	234
161 586 107	234
161 586 111	234
161 586 112	234
161 586 113	234
161 586 114	234
161 586 115	234
161 586 116	234
161 586 117	234
161 586 302	405
161 586 303	405
161 586 304	405
161 586 305	405
161 586 306	405
161 586 307	405
161 586 312	405
161 586 313	405
161 586 314	405
161 586 315	405
161 586 316	405
161 586 317	405
161 586 402	406
161 586 403	406
161 586 404	406
161 586 405	406
161 586 406	406
161 586 407	406
161 586 412	406
161 586 413	406
161 586 414	406
161 586 415	406
161 586 416	406
161 586 417	406
161 591 001	237
161 591 002	237
161 591 003	237
161 591 004	237
161 591 005	237
161 591 006	237
161 591 007	237
161 591 008	237, 407
161 591 009	237
161 591 010	237
161 591 011	237
161 591 012	237
161 591 013	237
161 591 014	237
161 591 015	237
161 591 016	237
161 591 017	237
161 591 018	237, 407
161 591 019	237
161 591 020	237
161 591 041	238
161 591 042	238
161 591 043	238
161 591 044	238
161 591 045	238
161 591 046	238
161 591 047	238
161 591 048	238
161 591 049	238
161 591 050	238
161 591 051	238
161 591 052	238
161 591 053	238
161 591 054	238
161 591 055	238
161 591 056	238
161 591 057	238
161 591 058	238
161 591 059	238
161 591 060	238
161 591 061	407

Index

Code	Page
161 591 062	407
161 591 063	407
161 591 064	407
161 591 065	407
161 591 066	407
161 591 067	407
161 591 069	407
161 591 070	407
161 591 071	407
161 591 072	407
161 591 073	407
161 591 074	407
161 591 075	407
161 591 076	407
161 591 077	407
161 591 079	407
161 591 080	407
161 591 139	408
161 591 140	408
161 591 141	408
161 591 142	408
161 591 143	408
161 591 144	408
161 591 145	408
161 591 146	408
161 591 147	408
161 591 148	408
161 591 149	408
161 591 150	408
161 591 151	408
161 591 152	408
161 591 153	408
161 591 154	408
161 591 155	408
161 591 156	408
161 595 001	238
161 595 002	238
161 595 003	238
161 595 004	238
161 595 005	238
161 595 006	238
161 595 007	238
161 595 008	238, 409
161 595 009	238
161 595 010	238
161 595 011	238
161 595 012	238
161 595 013	238
161 595 014	238
161 595 015	238
161 595 016	238
161 595 017	238
161 595 018	238, 409
161 595 019	238
161 595 020	238
161 595 041	239
161 595 042	239
161 595 043	239
161 595 044	239
161 595 045	239
161 595 046	239
161 595 047	239
161 595 048	239
161 595 049	239
161 595 050	239
161 595 051	239
161 595 052	239
161 595 053	239
161 595 054	239
161 595 055	239
161 595 056	239
161 595 057	239
161 595 058	239
161 595 059	239
161 595 060	239
161 595 061	409
161 595 062	409
161 595 063	409
161 595 064	409
161 595 065	409
161 595 066	409
161 595 067	409
161 595 069	409
161 595 070	409
161 595 071	409
161 595 072	409
161 595 073	409
161 595 074	409
161 595 075	409
161 595 076	409
161 595 077	409
161 595 079	409
161 595 080	409
161 604 012	190
161 604 014	190
161 604 015	190
161 604 032	190
161 604 034	190
161 604 035	190
161 604 062	190
161 604 064	190
161 604 065	190
161 604 412	191
161 604 414	191
161 604 415	191
161 604 432	191
161 604 434	191
161 604 435	191
161 604 462	191
161 604 464	191
161 604 465	191
161 604 512	382
161 604 514	382
161 604 515	382
161 604 532	382
161 604 534	382
161 604 535	382
161 604 562	382
161 604 564	382
161 604 565	382
161 604 812	382
161 604 814	382
161 604 815	382
161 604 832	382
161 604 834	382
161 604 835	382
161 604 862	382
161 604 864	382
161 604 865	382
161 605 012	190
161 605 014	190
161 605 015	190
161 605 032	190
161 605 034	190
161 605 035	190
161 605 062	190
161 605 064	190
161 605 065	190
161 614 011	192
161 614 012	192
161 614 013	192
161 614 014	192
161 614 015	192
161 614 016	192
161 614 017	192
161 614 412	193
161 614 413	193
161 614 414	193
161 614 415	193
161 614 416	193
161 614 417	193
161 614 512	383
161 614 513	383
161 614 514	383
161 614 515	383
161 614 516	383
161 614 517	383
161 614 812	384
161 614 813	384
161 614 814	384
161 614 815	384
161 614 816	384
161 614 817	384
161 614 912	384
161 614 913	384
161 614 914	384
161 614 915	384
161 614 916	384
161 614 917	384
161 615 012	192
161 615 013	192
161 615 014	192
161 615 015	192
161 615 016	192
161 615 017	192
161 617 012	194
161 617 013	194
161 617 014	194
161 617 015	194
161 617 016	194
161 617 017	194
161 617 912	385
161 617 913	385
161 617 914	385
161 617 915	385
161 617 916	385
161 617 917	385
161 617 922	456
161 617 923	456
161 617 924	456
161 617 925	456
161 617 926	456
161 617 927	456
161 624 011	195
161 624 012	195
161 624 013	195
161 624 014	195
161 624 015	195
161 624 016	195
161 624 017	195
161 624 031	195
161 624 032	195
161 624 033	195
161 624 034	195
161 624 035	195
161 624 036	195
161 624 037	195
161 624 052	195
161 624 053	195
161 624 054	195
161 624 055	195
161 624 056	195
161 624 057	195
161 624 061	195
161 624 062	195
161 624 063	195
161 624 064	195
161 624 065	195
161 624 066	195
161 624 067	195
161 624 512	386
161 624 513	386
161 624 514	386
161 624 515	386
161 624 516	386
161 624 517	386
161 624 532	386
161 624 533	386
161 624 534	386
161 624 535	386
161 624 536	386
161 624 537	386
161 624 812	387
161 624 813	387
161 624 814	387
161 624 815	387
161 624 816	387
161 624 817	387
161 624 832	387
161 624 833	387
161 624 834	387
161 624 835	387
161 624 836	387
161 624 837	387
161 624 912	387
161 624 913	387
161 624 914	387
161 624 915	387

Index

Code	Page
161 624 916	387
161 624 917	387
161 624 932	387
161 624 933	387
161 624 934	387
161 624 935	387
161 624 936	387
161 624 937	387
161 625 012	196
161 625 013	196
161 625 014	196
161 625 015	196
161 625 016	196
161 625 017	196
161 625 032	196
161 625 033	196
161 625 034	196
161 625 035	196
161 625 036	196
161 625 037	196
161 627 012	197
161 627 013	197
161 627 014	197
161 627 015	197
161 627 016	197
161 627 017	197
161 627 032	197
161 627 033	197
161 627 034	197
161 627 035	197
161 627 036	197
161 627 037	197
161 627 052	197
161 627 053	197
161 627 054	197
161 627 055	197
161 627 056	197
161 627 057	197
161 627 062	197
161 627 063	197
161 627 064	197
161 627 065	197
161 627 066	197
161 627 067	197
161 627 912	388
161 627 913	388
161 627 914	388
161 627 915	388
161 627 916	388
161 627 917	388
161 627 922	457
161 627 923	457
161 627 924	457
161 627 925	457
161 627 926	457
161 627 927	457
161 627 932	388
161 627 933	388
161 627 934	388
161 627 935	388
161 627 936	388
161 627 937	388
161 627 972	457
161 627 973	457
161 627 974	457
161 627 975	457
161 627 976	457
161 627 977	457
161 644 011	198
161 644 012	198
161 644 013	198
161 644 014	198
161 644 015	198
161 644 016	198
161 644 017	198
161 644 031	198
161 644 032	198
161 644 033	198
161 644 034	198
161 644 035	198
161 644 036	198
161 644 037	198
161 644 512	389
161 644 513	389
161 644 514	389
161 644 515	389
161 644 516	389
161 644 517	389
161 644 532	389
161 644 533	389
161 644 534	389
161 644 535	389
161 644 536	389
161 644 537	389
161 644 812	390
161 644 813	390
161 644 814	390
161 644 815	390
161 644 816	390
161 644 817	390
161 644 832	390
161 644 833	390
161 644 834	390
161 644 835	390
161 644 836	390
161 644 837	390
161 644 912	391
161 644 913	391
161 644 914	391
161 644 915	391
161 644 916	391
161 644 917	391
161 644 932	391
161 644 933	391
161 644 934	391
161 644 935	391
161 644 936	391
161 644 937	391
161 645 012	199
161 645 013	199
161 645 014	199
161 645 015	199
161 645 016	199
161 645 017	199
161 645 032	199
161 645 033	199
161 645 034	199
161 645 035	199
161 645 036	199
161 645 037	199
161 647 012	200
161 647 013	200
161 647 014	200
161 647 015	200
161 647 016	200
161 647 017	200
161 647 032	200
161 647 033	200
161 647 034	200
161 647 035	200
161 647 036	200
161 647 037	200
161 647 912	392
161 647 913	392
161 647 914	392
161 647 915	392
161 647 916	392
161 647 917	392
161 647 922	458
161 647 923	458
161 647 924	458
161 647 925	458
161 647 926	458
161 647 927	458
161 647 932	392
161 647 933	392
161 647 934	392
161 647 935	392
161 647 936	392
161 647 937	392
161 647 972	458
161 647 973	458
161 647 974	458
161 647 975	458
161 647 976	458
161 647 977	458
161 654 011	201
161 654 012	201
161 654 013	201
161 654 014	201
161 654 015	201
161 654 016	201
161 654 017	201
161 654 031	201
161 654 032	201
161 654 033	201
161 654 034	201
161 654 035	201
161 654 036	201
161 654 037	201
161 654 512	393
161 654 513	393
161 654 514	393
161 654 515	393
161 654 516	393
161 654 517	393
161 654 532	393
161 654 533	393
161 654 534	393
161 654 535	393
161 654 536	393
161 654 537	393
161 654 812	394
161 654 813	394
161 654 814	394
161 654 815	394
161 654 816	394
161 654 817	394
161 654 832	394
161 654 833	394
161 654 834	394
161 654 835	394
161 654 836	394
161 654 837	394
161 654 912	395
161 654 913	395
161 654 914	395
161 654 915	395
161 654 916	395
161 654 917	395
161 654 932	395
161 654 933	395
161 654 934	395
161 654 935	395
161 654 936	395
161 654 937	395
161 655 012	202
161 655 013	202
161 655 014	202
161 655 015	202
161 655 016	202
161 655 017	202
161 655 032	202
161 655 033	202
161 655 034	202
161 655 035	202
161 655 036	202
161 655 037	202
161 657 012	203
161 657 013	203
161 657 014	203
161 657 015	203
161 657 016	203
161 657 017	203
161 657 032	203
161 657 033	203
161 657 034	203
161 657 035	203
161 657 036	203
161 657 037	203
161 657 912	396
161 657 913	396
161 657 914	396
161 657 915	396
161 657 916	396
161 657 917	396
161 657 922	459
161 657 923	459

Index

Code	Page
161 657 924	459
161 657 925	459
161 657 926	459
161 657 927	459
161 657 932	396
161 657 933	396
161 657 934	396
161 657 935	396
161 657 936	396
161 657 937	396
161 657 972	459
161 657 973	459
161 657 974	459
161 657 975	459
161 657 976	459
161 657 977	459
161 684 011	204
161 684 012	204
161 684 013	204
161 684 014	204
161 684 015	204
161 684 016	204
161 684 017	204
161 684 031	204
161 684 032	204
161 684 033	204
161 684 034	204
161 684 035	204
161 684 036	204
161 684 037	204
161 684 052	204
161 684 053	204
161 684 054	204
161 684 055	204
161 684 056	204
161 684 057	204
161 684 061	204
161 684 062	204
161 684 063	204
161 684 064	204
161 684 065	204
161 684 066	204
161 684 067	204
161 684 512	397
161 684 513	397
161 684 514	397
161 684 515	397
161 684 516	397
161 684 517	397
161 684 532	397
161 684 533	397
161 684 534	397
161 684 535	397
161 684 536	397
161 684 537	397
161 684 812	398
161 684 813	398
161 684 814	398
161 684 815	398
161 684 816	398
161 684 817	398
161 684 822	460

Code	Page
161 684 823	460
161 684 824	460
161 684 825	460
161 684 826	460
161 684 827	460
161 684 832	398
161 684 833	398
161 684 834	398
161 684 835	398
161 684 836	398
161 684 837	398
161 684 872	460
161 684 873	460
161 684 874	460
161 684 875	460
161 684 876	460
161 684 877	460
161 684 912	399
161 684 913	399
161 684 914	399
161 684 915	399
161 684 916	399
161 684 917	399
161 684 922	461
161 684 923	461
161 684 924	461
161 684 925	461
161 684 926	461
161 684 927	461
161 684 932	399
161 684 933	399
161 684 934	399
161 684 935	399
161 684 936	399
161 684 937	399
161 684 972	461
161 684 973	461
161 684 974	461
161 684 975	461
161 684 976	461
161 684 977	461
161 685 012	205
161 685 013	205
161 685 014	205
161 685 015	205
161 685 016	205
161 685 017	205
161 685 032	205
161 685 033	205
161 685 034	205
161 685 035	205
161 685 036	205
161 685 037	205
161 687 012	206
161 687 013	206
161 687 014	206
161 687 015	206
161 687 016	206
161 687 017	206
161 687 032	206
161 687 033	206
161 687 034	206

Code	Page
161 687 035	206
161 687 036	206
161 687 037	206
161 687 052	206
161 687 053	206
161 687 054	206
161 687 055	206
161 687 056	206
161 687 057	206
161 687 062	206
161 687 063	206
161 687 064	206
161 687 065	206
161 687 066	206
161 687 067	206
161 687 912	400
161 687 913	400
161 687 914	400
161 687 915	400
161 687 916	400
161 687 917	400
161 687 922	462
161 687 923	462
161 687 924	462
161 687 925	462
161 687 926	462
161 687 927	462
161 687 932	400
161 687 933	400
161 687 934	400
161 687 935	400
161 687 936	400
161 687 937	400
161 687 972	462
161 687 973	462
161 687 974	462
161 687 975	462
161 687 976	462
161 687 977	462
161 941 153	508
167 060 019	282
167 060 020	282
167 060 021	282
167 060 022	282
167 060 023	282
167 060 024	282
167 060 025	282
167 060 038	282
167 060 039	282
167 060 040	282
167 060 041	282
167 060 042	282
167 060 043	282
167 061 003	280
167 061 004	280
167 061 012	280
167 061 013	280
167 061 014	280
167 061 015	280
167 061 016	280
167 061 017	280
167 061 035	280

Code	Page
167 061 036	280
167 061 037	280
167 061 038	280
167 061 039	280
167 061 040	280
167 061 041	280
167 061 153	280
167 061 155	280
167 061 156	280
167 061 157	280
167 061 158	280
167 061 159	280
167 061 160	280
167 061 161	280
167 061 162	281
167 061 163	281
167 061 164	281
167 061 165	281
167 061 166	281
167 061 167	281
167 482 479	489, 489
167 482 480	489, 489
167 482 481	489, 489
167 482 482	489
167 484 076	487, 487, 509, 509, 510, 510
167 484 077	487, 509, 510
167 484 078	487, 509, 510
167 484 079	487, 509, 510
167 484 080	487, 509, 510
167 484 081	487, 509, 510
167 484 082	487, 509, 510
167 484 083	487, 509, 510
167 484 084	487, 509, 510
167 484 088	487, 487, 509, 509, 510, 510
167 484 089	487, 509, 510
167 484 090	487, 509, 510
167 484 091	487, 509, 510
167 484 092	487, 509, 510
167 484 093	487, 509, 510
167 484 094	487, 509, 510
167 484 095	487, 509, 510
167 484 096	487, 509, 510

Index

Code	Page
167 484 100	487, 487
167 484 101	487
167 484 102	487
167 484 103	487
167 484 104	487
167 484 105	487
167 484 376	490, 490
167 484 377	490
167 484 378	490
167 484 379	490
167 484 380	490
167 484 381	490
167 484 442	490, 490
167 484 443	490
167 484 444	490
167 484 445	490
167 484 446	490
167 484 447	490
167 484 488	490, 490
167 484 489	490
167 484 490	490
167 484 491	490
167 484 492	490
167 484 493	490
167 484 542	490, 490
167 484 543	490
167 484 544	490
167 484 545	490
167 484 546	490
167 484 547	490
167 484 576	490, 490
167 484 577	490
167 484 578	490
167 484 579	490
167 484 580	490
167 484 581	490
167 484 588	490, 490
167 484 589	490
167 484 590	490
167 484 591	490
167 484 592	490
167 484 593	490
167 484 642	492, 492
167 484 643	492
167 484 644	492
167 484 645	492
167 484 646	492
167 484 647	492
167 484 688	492, 492
167 484 689	492
167 484 690	492
167 484 691	492
167 484 692	492
167 484 693	492
167 484 742	492, 492
167 484 743	492
167 484 744	492
167 484 745	492
167 484 746	492
167 484 747	492
167 484 788	492, 492
167 484 789	492
167 484 790	492
167 484 791	492
167 484 792	492
167 484 793	492
167 484 941	489
167 484 942	489
167 484 943	489
167 484 944	489
167 484 945	492
167 484 946	492
167 484 947	492
167 484 948	492
167 484 992	499
167 484 993	499
167 484 994	499
167 484 995	499
167 484 996	499
167 484 997	499
167 485 151	508, 508
167 485 152	508
167 485 153	508
167 485 154	508
167 485 155	508
167 485 156	508
167 485 157	508
167 485 158	508
167 485 159	508
167 485 361	508, 508
167 485 362	508
167 485 363	508
167 485 364	508
167 485 365	508
167 485 366	508
167 485 367	508
167 485 368	508
167 485 369	508
173 061 003	281
173 061 004	281
173 061 005	281
173 061 006	281
173 061 007	281
173 061 008	281
173 061 009	281
173 061 010	281
173 061 011	281
173 061 012	281
173 061 013	281
173 061 014	281
173 061 015	281
173 061 016	281
173 061 017	281
173 061 153	281
173 061 155	281
173 061 156	281
173 061 157	281
173 061 158	281
173 061 159	281
173 061 160	281
173 061 161	281
173 061 162	281
173 061 163	281
173 061 164	281
173 061 165	281
173 061 166	281
173 061 167	281
175 484 161	508, 508
175 484 162	508
175 484 163	508
175 484 164	508
175 484 165	508
175 484 166	508
175 484 167	508
175 484 168	508
175 484 169	508
192 017 036	18
192 017 037	18
192 017 038	18
192 017 039	18
192 017 040	18
192 017 041	18
192 017 042	18
192 017 044	18
192 017 045	18
192 017 046	18
192 017 047	18
192 017 060	17
192 017 080	17
192 017 082	19
192 017 083	19
192 017 084	19
192 017 085	19
192 017 086	19
192 017 087	19
192 017 088	19
192 017 089	19
192 017 104	18
192 017 105	18
192 017 106	18
192 017 107	18
192 017 108	18
192 017 109	18
192 017 110	18
192 017 111	18
192 301 401	515, 518
192 301 451	515, 518
192 301 501	515, 518
192 301 551	515, 518
192 301 651	515, 518
192 305 300	276
192 305 349	276
192 305 350	276
192 305 399	276
192 305 400	276
192 305 449	276
192 305 450	276
192 305 499	276
192 305 500	276
192 305 549	276
192 305 550	276
192 305 599	276
192 305 600	276
192 305 649	276
192 305 650	276
192 305 699	276
192 305 702	416
192 305 703	416
192 305 704	416
192 305 706	416
192 305 707	416
192 305 717	416
192 305 718	416
192 305 719	416
192 305 720	416
192 305 721	416
192 305 722	416
192 305 723	416
192 305 724	416
192 305 821	472
192 305 822	472
192 305 823	472
192 305 824	472
192 305 825	472
192 305 826	472
192 305 827	472
192 305 828	472
192 305 831	472
192 305 832	472
192 305 833	472
192 305 834	472
192 305 835	472
192 305 836	472
192 305 837	472
192 305 838	472
192 480 001	515, 518
192 480 002	515, 518
192 561 004	242
192 561 007	242
198 000 599	503, 503
198 000 621	503, 503, 503
198 000 622	503, 503
198 000 872	498
198 000 873	498
198 000 874	498
198 000 875	498
198 000 876	498
198 000 877	498
198 000 880	503, 503
198 000 881	498
198 000 882	498
198 000 883	498
198 000 884	498
198 000 885	498
198 000 886	498
198 000 892	500
198 000 893	500
198 000 894	500
198 000 895	500
198 000 896	500
198 000 897	500
198 104 166	500
198 150 127	476
198 150 128	476
198 150 129	476
198 150 130	476
198 150 131	476

Index

Code	Page
198 150 132	476
198 150 144	476
198 150 145	476
198 150 146	477
198 150 147	476
198 150 148	476
198 150 149	477
198 150 538	76
198 150 539	76
198 150 540	76
198 150 543	76
198 150 545	76
198 151 480	474
198 151 481	474
198 151 482	474
198 151 483	474
198 151 742	499
198 151 743	499
198 151 744	499
198 151 745	499
198 151 746	499
198 151 747	499
198 151 752	499
198 151 753	499
198 151 754	499
198 151 755	499
198 151 756	499
198 151 757	499
198 151 762	497
198 151 763	497
198 151 764	497
198 151 765	497
198 151 766	497
198 151 767	497
198 151 772	497
198 151 773	497
198 151 774	497
198 151 775	497
198 151 776	497
198 151 777	497
198 151 782	497
198 151 783	497
198 151 784	497
198 151 785	497
198 151 786	497
198 151 787	497
198 151 792	497
198 151 793	497
198 151 794	497
198 151 795	497
198 151 796	497
198 151 797	497
198 151 802	497
198 151 803	497
198 151 804	497
198 151 805	497
198 151 806	497
198 151 807	497
198 151 842	499
198 151 843	499
198 151 844	499
198 151 845	499
198 151 846	499
198 151 847	499
198 151 852	499
198 151 853	499
198 151 854	499
198 151 855	499
198 151 856	499
198 151 857	499
198 153 062	497
198 153 063	497
198 153 064	497
198 153 065	497
198 153 066	497
198 153 067	497
198 153 182	473
198 153 183	473
198 153 184	473
198 153 185	473
198 153 186	473
198 153 187	473
198 153 188	473
198 153 189	473
198 154 012	500
198 154 013	500
198 154 014	500
198 154 015	500
198 154 016	500
198 154 017	500
198 204 162	500
198 204 164	500
198 204 327	499
198 204 328	499
198 204 329	499
198 335 000	263
198 335 001	263
198 335 002	263
198 335 003	263
198 335 004	263
198 335 005	263
198 335 006	263
198 335 007	263
198 335 008	263
198 335 009	263
198 335 010	263
198 335 011	263
198 335 012	263
198 335 020	263
198 335 021	263
198 335 022	263
198 335 023	263
198 335 024	263
198 335 025	263
198 335 026	263
198 335 027	263
198 335 028	263
198 335 029	263
198 335 030	263
198 335 031	263
198 335 032	263
198 335 033	269
198 335 034	269
198 335 035	269
198 335 036	269
198 335 037	269
198 335 038	269
198 335 039	269
198 335 040	263
198 335 041	263
198 335 042	263
198 335 043	263
198 335 044	263
198 335 045	263
198 335 046	263
198 335 047	263
198 335 048	263
198 335 049	263
198 335 050	263
198 335 051	263
198 335 052	263
198 335 053	269
198 335 054	269
198 335 055	527
198 335 056	527
198 335 057	527
198 335 058	527
198 335 059	527
198 335 060	527
198 335 061	527
198 335 062	527
198 335 063	527
198 335 064	527
198 335 065	527
198 335 066	527
198 335 067	527
198 335 068	269
198 335 069	269
198 335 070	527
198 335 071	527
198 335 072	527
198 335 073	527
198 335 074	527
198 335 075	527
198 335 076	527
198 335 077	527
198 335 078	527
198 335 079	527
198 335 080	527
198 335 081	527
198 335 082	527
198 335 083	269
198 335 084	269
198 335 085	527
198 335 086	527
198 335 087	527
198 335 088	527
198 335 089	527
198 335 090	527
198 335 091	527
198 335 092	527
198 335 093	527
198 335 094	527
198 335 095	527
198 335 096	527
198 335 097	527
198 335 098	528, 528, 528, 528
198 335 100	264
198 335 101	264
198 335 102	264
198 335 103	264
198 335 104	264
198 335 105	264
198 335 106	264
198 335 107	264
198 335 108	264
198 335 109	264
198 335 110	264
198 335 111	264
198 335 112	264
198 335 120	264
198 335 121	264
198 335 122	264
198 335 123	264
198 335 124	264
198 335 125	264
198 335 126	264
198 335 127	264
198 335 128	264
198 335 129	264
198 335 130	264
198 335 131	264
198 335 132	264
198 335 140	264
198 335 141	264
198 335 142	264
198 335 143	264
198 335 144	264
198 335 145	264
198 335 146	264
198 335 147	264
198 335 148	264
198 335 149	264
198 335 150	264
198 335 151	264
198 335 152	264
198 335 255	527
198 335 256	527
198 335 257	527
198 335 258	527
198 335 259	527
198 335 260	527
198 335 261	527
198 335 262	527
198 335 263	527
198 335 264	527
198 335 265	527
198 335 266	527
198 335 267	527
198 335 270	527
198 335 271	527
198 335 272	527
198 335 273	527
198 335 274	527
198 335 275	527
198 335 276	527
198 335 277	527

Index

Code	Page
198 335 278	527
198 335 279	527
198 335 280	527
198 335 281	527
198 335 282	527
198 335 285	527
198 335 286	527
198 335 287	527
198 335 288	527
198 335 289	527
198 335 290	527
198 335 291	527
198 335 292	527
198 335 293	527
198 335 294	527
198 335 295	527
198 335 296	527
198 335 297	527
198 335 455	524, 524, 524, 524, 528, 528, 528, 528
198 335 456	524, 528
198 335 457	524, 524, 524, 524, 528, 528, 528, 528
198 335 458	524, 528
198 335 459	524, 524, 528, 528
198 335 460	524, 528
198 335 470	524, 524, 524, 524, 528, 528, 528, 528
198 335 471	524, 524, 524, 524, 524, 528, 528, 528, 528, 528
198 335 472	524, 528
198 335 473	524, 524, 528, 528
198 335 474	524, 528
198 335 655	269
198 335 656	269
198 335 657	269
198 335 658	269
198 335 659	269
198 335 660	269
198 335 661	269
198 335 662	269
198 335 663	269
198 335 664	269
198 335 665	269
198 335 666	269
198 335 667	269
198 335 670	269
198 335 671	269
198 335 672	269
198 335 673	269
198 335 674	269
198 335 675	269
198 335 676	269
198 335 677	269
198 335 678	269
198 335 679	269
198 335 680	269
198 335 681	269
198 335 682	269
198 335 685	270
198 335 686	270
198 335 687	270
198 335 688	270
198 335 689	270
198 335 690	270
198 335 691	270
198 335 692	270
198 335 693	270
198 335 694	270
198 335 695	270
198 335 696	270
198 335 697	270
198 335 861	268
198 335 862	268
198 335 863	268
198 335 864	268
198 335 865	268
198 335 866	268
198 335 867	268
198 335 868	268
198 335 869	268
198 335 870	268
198 335 871	268
198 335 872	268
198 335 873	268
198 335 893	528
198 335 894	528
198 335 895	530
198 335 896	530, 530, 530
198 335 953	525, 529
198 335 954	525, 525, 525, 529, 529, 529
198 335 960	274
198 335 961	274
198 335 962	274
198 335 963	274
198 335 964	274
198 335 965	274
198 335 966	274
198 335 967	274
198 335 968	274
198 335 969	274
198 335 970	524, 524, 528, 528
198 335 971	524, 524, 528, 528
198 335 972	524, 524, 524, 528, 528, 528
198 335 973	524, 524, 528, 528
198 335 974	524, 528
198 335 975	524, 524, 524, 528, 528, 528
198 335 977	524, 524, 528, 528
198 335 978	524, 524, 528, 528
198 335 979	524, 524, 524, 528, 528, 528
198 335 980	524, 524, 528, 528
198 335 981	528
198 335 982	528
198 335 984	528, 528, 528, 528
198 335 985	528, 528, 528, 528
198 335 986	525, 529
198 335 987	525, 525, 525, 529, 529, 529
198 335 990	525, 525, 525, 525, 525, 529, 529, 529, 529, 529
198 335 991	274
198 335 992	274
198 335 993	274
198 335 994	274
198 335 995	274
198 350 000	265
198 350 001	265
198 350 002	265
198 350 003	265
198 350 004	265
198 350 005	265
198 350 006	265
198 350 007	265
198 350 008	265
198 350 009	265
198 350 010	265
198 350 011	265
198 350 012	265
198 350 020	265
198 350 021	265
198 350 022	265
198 350 023	265
198 350 024	265
198 350 025	265
198 350 026	265
198 350 027	265
198 350 028	265
198 350 029	265
198 350 030	265
198 350 031	265
198 350 032	265
198 350 040	265
198 350 041	265
198 350 042	265
198 350 043	265
198 350 044	265
198 350 045	265
198 350 046	265
198 350 047	265
198 350 048	265
198 350 049	265
198 350 050	265
198 350 051	265
198 350 052	265
198 350 055	523
198 350 056	523
198 350 057	523
198 350 058	523
198 350 059	523
198 350 060	523
198 350 061	523
198 350 062	523
198 350 063	523
198 350 064	523
198 350 065	523
198 350 066	523
198 350 067	523
198 350 070	523
198 350 071	523
198 350 072	523
198 350 073	523
198 350 074	523
198 350 075	523
198 350 076	523
198 350 077	523
198 350 078	523
198 350 079	523
198 350 080	523
198 350 081	523
198 350 082	523
198 350 085	523
198 350 086	523
198 350 087	523
198 350 088	523
198 350 089	523
198 350 090	523
198 350 091	523
198 350 092	523
198 350 093	523
198 350 094	523
198 350 095	523
198 350 096	523
198 350 097	523
198 350 098	524, 524, 524, 524
198 350 100	266
198 350 101	266
198 350 102	266
198 350 103	266
198 350 104	266
198 350 105	266
198 350 106	266
198 350 107	266
198 350 108	266
198 350 109	266
198 350 110	266

Index

Code	Page
198 350 111	266
198 350 112	266
198 350 120	266
198 350 121	266
198 350 122	266
198 350 123	266
198 350 124	266
198 350 125	266
198 350 126	266
198 350 127	266
198 350 128	266
198 350 129	266
198 350 130	266
198 350 131	266
198 350 132	266
198 350 140	266
198 350 141	266
198 350 142	266
198 350 143	266
198 350 144	266
198 350 145	266
198 350 146	266
198 350 147	266
198 350 148	266
198 350 149	266
198 350 150	266
198 350 151	266
198 350 152	266
198 350 255	523
198 350 256	523
198 350 257	523
198 350 258	523
198 350 259	523
198 350 260	523
198 350 261	523
198 350 262	523
198 350 263	523
198 350 264	523
198 350 265	523
198 350 266	523
198 350 267	523
198 350 270	523
198 350 271	523
198 350 272	523
198 350 273	523
198 350 274	523
198 350 275	523
198 350 276	523
198 350 277	523
198 350 278	523
198 350 279	523
198 350 280	523
198 350 281	523
198 350 282	523
198 350 285	523
198 350 286	523
198 350 287	523
198 350 288	523
198 350 289	523
198 350 290	523
198 350 291	523
198 350 292	523
198 350 293	523
198 350 294	523
198 350 295	523
198 350 296	523
198 350 297	523
198 350 655	270
198 350 656	270
198 350 657	270
198 350 658	270
198 350 659	270
198 350 660	270
198 350 661	270
198 350 662	270
198 350 663	270
198 350 664	270
198 350 665	270
198 350 666	270
198 350 667	270
198 350 670	270
198 350 671	270
198 350 672	270
198 350 673	270
198 350 674	270
198 350 675	270
198 350 676	270
198 350 677	270
198 350 678	270
198 350 679	270
198 350 680	270
198 350 681	270
198 350 682	270
198 350 685	271
198 350 686	271
198 350 687	271
198 350 688	271
198 350 689	271
198 350 690	271
198 350 691	271
198 350 692	271
198 350 693	271
198 350 694	271
198 350 695	271
198 350 696	271
198 350 697	271
198 350 755	271
198 350 756	271
198 350 757	271
198 350 758	271
198 350 759	271
198 350 760	271
198 350 761	271
198 350 762	271
198 350 763	271
198 350 764	271
198 350 765	271
198 350 766	271
198 350 767	271
198 350 895	526
198 350 896	526, 526, 526
198 350 980	524, 524, 524, 524
198 350 981	524, 524, 524, 524
198 800 004	477
198 800 005	477
198 800 006	477
198 800 007	477
198 800 017	477
198 800 018	477
198 800 019	477
198 800 020	477
198 800 025	477
198 800 026	477
198 800 028	477
198 800 029	477
198 800 034	477
198 800 037	477
198 800 039	477
198 800 040	479
198 800 041	477
198 800 042	479
198 800 043	477
198 800 044	479
198 800 045	477
198 800 046	479
198 800 047	477
198 800 048	479
198 800 050	479
198 800 051	479
198 800 052	477
198 800 054	477
198 800 056	477
198 800 058	477
198 800 060	477
198 800 062	477
198 800 728	477
198 800 729	477
198 800 730	477
198 800 731	477
198 800 733	479
198 800 734	479
198 800 735	479
198 800 737	479
198 800 757	477
198 800 758	479
198 800 759	479
198 801 308	272
198 801 309	272
198 801 310	272
198 801 311	272
198 801 312	272
198 801 313	272
198 801 314	272
198 801 315	272
198 801 316	272
198 801 317	272
198 801 338	530
198 801 339	530
198 801 340	530
198 801 341	530
198 801 342	530
198 801 343	530
198 801 386	271
198 801 387	271
198 801 388	271
198 801 389	271
198 801 390	271
198 801 391	271
198 801 392	271
198 801 393	271
198 801 394	271
198 801 395	271
198 801 445	530
198 801 449	530
198 801 450	530
198 801 451	530
198 801 880	268
198 801 881	268
198 801 882	268
198 801 883	268
198 801 884	268
198 801 885	268
198 801 886	268
198 801 887	268
198 801 888	268
198 801 889	268
198 801 890	267
198 801 891	267
198 801 892	267
198 801 893	267
198 801 894	267
198 801 895	267
198 801 896	267
198 801 897	267
198 801 898	267
198 801 899	267
198 801 961	272
198 801 962	272
198 801 963	272
198 801 964	272
198 801 965	272
198 801 966	272
198 801 967	272
198 801 968	272
198 801 969	272
198 801 970	272
198 803 310	268
198 803 311	268
198 803 312	268
198 803 313	268
198 803 314	268
198 803 315	268
198 803 316	268
198 803 317	268
198 803 318	268
198 803 319	268
198 803 320	267
198 803 321	267
198 803 322	267
198 803 323	267
198 803 324	267
198 803 325	267
198 803 326	267
198 803 327	267
198 803 328	267

Index

Code	Page
198 803 329	267
198 803 790	530
198 803 791	530
198 803 792	530
198 803 793	531
198 803 794	530
198 803 795	530
198 803 796	530
198 803 797	531
198 803 798	531
198 803 799	531
198 806 219	531
198 806 220	531
198 806 221	531
198 806 222	531
198 806 223	531
198 806 224	531
198 806 391	504
198 806 393	504
198 806 396	504
198 806 429	525, 529
198 806 451	505
198 806 452	505
198 806 453	505
198 806 511	272
198 806 512	272
198 806 513	272
198 806 514	272
198 806 515	272
198 806 516	272
198 806 517	272
198 806 518	272
198 806 519	272
198 806 520	272
198 806 521	273
198 806 522	273
198 806 523	273
198 806 524	273
198 806 525	273
198 806 526	273
198 806 527	273
198 806 528	273
198 806 529	273
198 806 530	273
198 806 531	273
198 806 532	273
198 806 533	273
198 806 534	273
198 806 535	273
198 806 536	273
198 806 537	273
198 806 639	497
198 806 640	497
198 806 650	504
198 806 651	505
198 806 652	505
198 806 653	505
198 806 654	504
198 806 655	505
198 806 656	505
198 806 962	505
198 806 963	505
198 807 166	531
198 807 182	531
198 807 187	531
198 807 188	531
198 808 000	521
198 808 001	521
198 808 002	521
198 808 003	521
198 808 004	521
198 808 005	521
198 808 006	521
198 808 007	521
198 808 008	521
198 808 009	521
198 808 010	521
198 808 011	521
198 808 012	521
198 808 013	521
198 808 014	521
198 808 015	521
198 808 016	521
198 808 017	521
198 808 018	521
198 808 019	521
198 808 020	521
198 808 021	521
198 808 022	521
198 808 023	521
198 808 024	521
198 808 025	521
198 808 026	521
198 808 027	521
198 808 028	521
198 808 029	522
198 808 030	522
198 808 031	522
198 808 032	522
198 808 033	522
198 808 034	522
198 808 035	522
198 808 036	522
198 808 037	522
198 808 038	522
198 808 039	522
198 808 040	522
198 808 041	522
198 808 042	522
198 808 043	522
198 808 044	522
198 808 045	522
198 808 046	522
198 808 047	522
198 808 048	522
198 808 049	522
198 808 050	522
198 808 051	522
198 808 052	522
198 808 053	522
198 808 054	522
198 811 025	477
198 811 026	477
198 811 027	477
198 811 028	477
198 811 029	477
198 811 030	477
198 811 190	477
198 811 194	477
198 811 198	477
199 001 240	279
199 025 127	207
199 025 128	207
199 025 129	207
199 025 130	207
199 025 137	208
199 025 138	208
199 025 139	208
199 025 140	208
199 025 147	209
199 025 148	209
199 025 149	209
199 025 150	209
199 025 157	207
199 025 158	207
199 025 159	207
199 025 167	208
199 025 168	208
199 025 169	208
199 025 170	208
199 025 177	209
199 025 178	209
199 025 179	209
199 025 180	209
199 041 000	239
199 041 001	239
199 041 006	240
199 041 007	240
199 041 019	233
199 041 020	233
199 041 021	233
199 041 029	233
199 041 030	233
199 041 031	233
199 041 120	240
199 041 121	240
199 041 122	240
199 041 123	240
199 041 124	240
199 041 125	240
199 041 126	240
199 041 127	240
199 041 128	240
199 041 147	241
199 041 148	241
199 041 149	241
199 041 150	241
199 041 151	241
199 041 152	241
199 041 153	241
199 041 154	241
199 041 155	241
199 041 156	241
199 041 157	241
199 041 158	241
199 041 159	241
199 041 160	241
199 041 161	241
199 041 162	241
199 041 163	241
199 041 164	241
199 041 203	241
199 041 204	241
199 041 205	241
199 041 206	241
199 041 207	241
199 041 208	241
199 041 209	241
199 041 210	241
199 041 211	241
199 041 212	241
199 041 213	241
199 041 214	241
199 041 215	241
199 041 216	241
199 041 292	239
199 041 293	239
199 041 945	236
199 041 950	236
199 041 953	236
199 041 988	236
199 041 990	236
199 041 991	236
199 104 002	120
199 104 003	120
199 104 004	120
199 104 005	120
199 104 006	120
199 104 007	120
199 104 008	120
199 104 012	120
199 104 013	120
199 104 014	120
199 104 015	120
199 104 016	120
199 104 017	120
199 104 018	120
199 104 042	120
199 104 043	120
199 104 044	120
199 104 045	120
199 104 046	120
199 104 047	120
199 104 048	120
199 104 052	120
199 104 053	120
199 104 054	120
199 104 055	120
199 104 056	120
199 104 057	120
199 104 058	120
199 104 402	327
199 104 403	327
199 104 404	327
199 104 405	327
199 104 406	327
199 104 407	327
199 104 408	327

Index

Code	Page
199 104 412	327
199 104 413	327
199 104 414	327
199 104 415	327
199 104 416	327
199 104 417	327
199 104 418	327
199 104 442	328
199 104 443	328
199 104 444	328
199 104 445	328
199 104 446	328
199 104 447	328
199 104 448	328
199 104 452	328
199 104 453	328
199 104 454	328
199 104 455	328
199 104 456	328
199 104 457	328
199 104 458	328
199 104 483	327
199 104 484	327
199 104 485	327
199 104 486	327
199 104 487	327
199 104 488	327
199 104 493	327
199 104 494	327
199 104 495	327
199 104 496	327
199 104 497	327
199 104 498	327
199 104 863	328
199 104 864	328
199 104 865	328
199 104 866	328
199 104 867	328
199 104 868	328
199 104 873	328
199 104 874	328
199 104 875	328
199 104 876	328
199 104 877	328
199 104 878	328
199 107 002	109
199 107 003	109
199 107 004	109
199 107 005	109
199 107 006	109
199 107 007	109
199 107 008	109
199 107 012	109
199 107 013	109
199 107 014	109
199 107 015	109
199 107 016	109
199 107 017	109
199 107 018	109
199 107 022	110
199 107 023	110
199 107 024	110
199 107 025	110
199 107 026	110
199 107 027	110
199 107 028	110
199 107 032	110
199 107 033	110
199 107 034	110
199 107 035	110
199 107 036	110
199 107 037	110
199 107 038	110
199 107 042	113
199 107 043	113
199 107 044	113
199 107 045	113
199 107 046	113
199 107 047	113
199 107 048	113
199 107 052	113
199 107 053	113
199 107 054	113
199 107 055	113
199 107 056	113
199 107 057	113
199 107 058	113
199 107 062	114
199 107 063	114
199 107 064	114
199 107 065	114
199 107 066	114
199 107 067	114
199 107 068	114
199 107 072	114
199 107 073	114
199 107 074	114
199 107 075	114
199 107 076	114
199 107 077	114
199 107 078	114
199 107 402	317
199 107 403	317
199 107 404	317
199 107 405	317
199 107 406	317
199 107 407	317
199 107 408	317
199 107 412	317
199 107 413	317
199 107 414	317
199 107 415	317
199 107 416	317
199 107 417	317
199 107 418	317
199 107 442	319
199 107 443	319
199 107 444	319
199 107 445	319
199 107 446	319
199 107 447	319
199 107 448	319
199 107 452	319
199 107 453	319
199 107 454	319
199 107 455	319
199 107 456	319
199 107 457	319
199 107 458	319
199 107 483	318
199 107 484	318
199 107 485	318
199 107 486	318
199 107 487	318
199 107 488	318
199 107 493	318
199 107 494	318
199 107 495	318
199 107 496	318
199 107 497	318
199 107 498	318
199 107 603	112
199 107 604	112
199 107 605	112
199 107 606	112
199 107 607	112
199 107 608	112
199 107 613	112
199 107 614	112
199 107 615	112
199 107 616	112
199 107 617	112
199 107 618	112
199 107 622	111
199 107 623	111
199 107 624	111
199 107 625	111
199 107 626	111
199 107 627	111
199 107 628	111
199 107 632	111
199 107 633	111
199 107 634	111
199 107 635	111
199 107 636	111
199 107 637	111
199 107 638	111
199 107 643	116
199 107 644	116
199 107 645	116
199 107 646	116
199 107 647	116
199 107 648	116
199 107 653	116
199 107 654	116
199 107 655	116
199 107 656	116
199 107 657	116
199 107 658	116
199 107 662	115
199 107 663	115
199 107 664	115
199 107 665	115
199 107 666	115
199 107 667	115
199 107 668	115
199 107 672	115
199 107 673	115
199 107 674	115
199 107 675	115
199 107 676	115
199 107 677	115
199 107 678	115
199 107 863	320
199 107 864	320
199 107 865	320
199 107 866	320
199 107 867	320
199 107 868	320
199 107 873	320
199 107 874	320
199 107 875	320
199 107 876	320
199 107 877	320
199 107 878	320
199 145 002	213
199 145 003	213
199 145 004	213
199 145 005	213
199 145 006	213
199 145 007	213
199 145 008	213
199 145 022	213
199 145 023	213
199 145 024	213
199 145 025	213
199 145 026	213
199 145 027	213
199 145 028	213
199 145 042	214
199 145 043	214
199 145 044	214
199 145 045	214
199 145 046	214
199 145 047	214
199 145 048	214
199 145 049	214
199 145 050	214
199 145 062	214
199 145 063	214
199 145 064	214
199 145 065	214
199 145 066	214
199 145 067	214
199 145 068	214
199 145 069	214
199 145 070	214
199 145 082	215
199 145 083	215
199 145 084	215
199 145 085	215
199 145 086	215
199 145 087	215
199 145 088	215
199 145 122	216
199 145 123	216
199 145 124	216
199 145 125	216

Index

Code	Page
199 145 126	216
199 145 127	216
199 145 128	216
199 145 129	216
199 145 130	216
199 145 142	216
199 145 143	216
199 145 144	216
199 145 145	216
199 145 146	216
199 145 147	216
199 145 148	216
199 145 149	216
199 145 150	216
199 146 002	223
199 146 003	223
199 146 004	223
199 146 005	223
199 146 006	223
199 146 007	223
199 146 008	223
199 146 042	224
199 146 043	224
199 146 044	224
199 146 045	224
199 146 046	224
199 146 047	224
199 146 048	224
199 146 049	224
199 146 050	224
199 146 082	225
199 146 083	225
199 146 084	225
199 146 085	225
199 146 086	225
199 146 087	225
199 146 088	225
199 146 122	226
199 146 123	226
199 146 124	226
199 146 125	226
199 146 126	226
199 146 127	226
199 146 128	226
199 157 002	258
199 157 003	258
199 157 004	258
199 157 007	258
199 157 008	258
199 157 009	258
199 157 022	258
199 157 023	258
199 157 024	258
199 157 027	258
199 157 028	258
199 157 029	258
199 157 622	258
199 157 623	258
199 157 624	258
199 157 627	258
199 157 628	258
199 157 629	258
199 157 642	258
199 157 643	258
199 157 644	258
199 157 647	258
199 157 648	258
199 157 649	258
199 158 058	260
199 160 005	259
199 160 006	259
199 160 007	259
199 160 008	259
199 160 009	259
199 160 010	259
199 160 011	259
199 160 012	259
199 160 013	259
199 160 014	259
199 160 020	259
199 160 021	259
199 160 022	259
199 160 023	259
199 160 024	259
199 160 025	259
199 160 026	259
199 160 027	259
199 160 028	259
199 160 029	259
199 160 365	259
199 160 366	259
199 160 367	259
199 160 368	259
199 160 369	259
199 160 370	259
199 160 371	259
199 160 372	259
199 160 373	259
199 160 374	259
199 160 380	259
199 160 381	259
199 160 382	259
199 160 383	259
199 160 384	259
199 160 385	259
199 160 386	259
199 160 387	259
199 160 388	259
199 160 389	259
199 161 035	260
199 161 036	260
199 161 037	260
199 161 038	260
199 161 039	260
199 161 040	260
199 161 041	260
199 161 042	260
199 161 043	260
199 161 044	260
199 161 050	260
199 161 051	260
199 161 052	260
199 161 053	260
199 161 054	260
199 161 055	260
199 161 056	260
199 161 057	260
199 161 059	260
199 161 425	260
199 161 426	260
199 161 427	260
199 161 428	260
199 161 429	260
199 161 430	260
199 161 431	260
199 161 432	260
199 161 433	260
199 161 434	260
199 161 440	260
199 161 441	260
199 161 442	260
199 161 443	260
199 161 444	260
199 161 445	260
199 161 446	260
199 161 447	260
199 161 448	260
199 161 449	260
199 165 002	261
199 165 003	261
199 165 004	261
199 165 005	261
199 165 006	261
199 165 007	261
199 165 012	261
199 165 013	261
199 165 014	261
199 165 015	261
199 165 016	261
199 165 017	261
199 165 022	262
199 165 023	262
199 165 024	262
199 165 025	262
199 165 026	262
199 165 027	262
199 165 032	261
199 165 033	261
199 165 034	261
199 165 035	261
199 165 036	261
199 165 037	261
199 165 042	261
199 165 043	261
199 165 044	261
199 165 045	261
199 165 046	261
199 165 047	261
199 165 072	262
199 165 073	262
199 165 074	262
199 165 075	262
199 165 076	262
199 165 077	262
199 166 011	262
199 166 016	262
199 166 201	262
199 166 206	262
199 167 002	163
199 167 003	163
199 167 004	163
199 167 005	163
199 167 006	163
199 167 007	163
199 167 008	163
199 167 012	163
199 167 013	163
199 167 014	163
199 167 015	163
199 167 016	163
199 167 017	163
199 167 018	163
199 167 022	162
199 167 023	162
199 167 024	162
199 167 025	162
199 167 026	162
199 167 027	162
199 167 028	162
199 167 032	162
199 167 033	162
199 167 034	162
199 167 035	162
199 167 036	162
199 167 037	162
199 167 038	162
199 167 062	164
199 167 063	164
199 167 064	164
199 167 065	164
199 167 066	164
199 167 067	164
199 167 068	164
199 167 072	164
199 167 073	164
199 167 074	164
199 167 075	164
199 167 076	164
199 167 077	164
199 167 078	164
199 167 202	165
199 167 203	165
199 167 204	165
199 167 205	165
199 167 206	165
199 167 207	165
199 167 208	165
199 167 212	165
199 167 213	165
199 167 214	165
199 167 215	165
199 167 216	165
199 167 217	165
199 167 218	165
199 167 242	166
199 167 243	166
199 167 244	166
199 167 245	166

Index

Code	Page
199 167 246	166
199 167 247	166
199 167 248	166
199 167 252	166
199 167 253	166
199 167 254	166
199 167 255	166
199 167 256	166
199 167 257	166
199 167 258	166
199 167 843	366
199 167 844	366
199 167 845	366
199 167 846	366
199 167 847	366
199 167 848	366
199 170 242	167
199 170 243	167
199 170 244	167
199 170 245	167
199 170 246	167
199 170 247	167
199 170 248	167
199 170 252	167
199 170 253	167
199 170 254	167
199 170 255	167
199 170 256	167
199 170 257	167
199 170 258	167
199 170 262	168
199 170 263	168
199 170 264	168
199 170 265	168
199 170 266	168
199 170 267	168
199 170 268	168
199 170 272	168
199 170 273	168
199 170 274	168
199 170 275	168
199 170 276	168
199 170 277	168
199 170 278	168
199 170 333	367
199 170 334	367
199 170 335	367
199 170 336	367
199 170 337	367
199 170 338	367
199 170 343	367
199 170 344	367
199 170 345	367
199 170 346	367
199 170 347	367
199 170 348	367
199 170 373	368
199 170 374	368
199 170 375	368
199 170 376	368
199 170 377	368
199 170 378	368
199 170 383	368
199 170 384	368
199 170 385	368
199 170 386	368
199 170 387	368
199 170 388	368
199 170 393	438
199 170 394	438
199 170 395	438
199 170 396	438
199 170 397	438
199 170 398	438
199 179 002	117
199 179 003	117
199 179 004	117
199 179 005	117
199 179 006	117
199 179 007	117
199 179 008	117
199 179 009	117
199 179 010	117
199 179 011	117
199 179 012	117
199 179 013	117
199 179 014	117
199 179 015	117
199 179 016	117
199 179 017	117
199 179 018	117
199 179 019	117
199 179 020	117
199 179 021	117
199 179 042	119
199 179 043	119
199 179 044	119
199 179 045	119
199 179 046	119
199 179 047	119
199 179 048	119
199 179 049	119
199 179 050	119
199 179 051	119
199 179 052	119
199 179 053	119
199 179 054	119
199 179 055	119
199 179 056	119
199 179 057	119
199 179 058	119
199 179 059	119
199 179 060	119
199 179 061	119
199 179 349	118
199 179 350	118
199 179 351	118
199 179 359	118
199 179 360	118
199 179 361	118
199 183 002	321
199 183 003	321
199 183 004	321
199 183 005	321
199 183 006	321
199 183 007	321
199 183 008	321
199 183 009	321
199 183 010	321
199 183 011	321
199 183 012	321
199 183 013	321
199 183 014	321
199 183 015	321
199 183 016	321
199 183 017	321
199 183 018	321
199 183 019	321
199 183 020	321
199 183 021	321
199 183 042	322
199 183 043	322
199 183 044	322
199 183 045	322
199 183 046	322
199 183 047	322
199 183 048	322
199 183 049	322
199 183 050	322
199 183 051	322
199 183 052	322
199 183 053	322
199 183 054	322
199 183 055	322
199 183 056	322
199 183 057	322
199 183 058	322
199 183 059	322
199 183 060	322
199 183 061	322
199 184 003	323
199 184 004	323
199 184 005	323
199 184 006	323
199 184 007	323
199 184 008	323
199 184 009	323
199 184 010	323
199 184 011	323
199 184 013	323
199 184 014	323
199 184 015	323
199 184 016	323
199 184 017	323
199 184 018	323
199 184 019	323
199 184 020	323
199 184 021	323
199 184 023	326
199 184 024	326
199 184 025	326
199 184 026	326
199 184 027	326
199 184 028	326
199 184 029	326
199 184 030	326
199 184 031	326
199 184 033	326
199 184 034	326
199 184 035	326
199 184 036	326
199 184 037	326
199 184 038	326
199 184 039	326
199 184 040	326
199 184 041	326
199 184 043	324
199 184 044	324
199 184 045	324
199 184 046	324
199 184 047	324
199 184 048	324
199 184 053	324
199 184 054	324
199 184 055	324
199 184 056	324
199 184 057	324
199 184 058	324
199 184 349	325
199 184 350	325
199 184 351	325
199 184 359	325
199 184 360	325
199 184 361	325
199 185 883	439
199 185 884	439
199 185 885	439
199 185 886	439
199 185 887	439
199 185 888	439
199 185 893	439
199 185 894	439
199 185 895	439
199 185 896	439
199 185 897	439
199 185 898	439
199 185 903	440
199 185 904	440
199 185 905	440
199 185 906	440
199 185 907	440
199 185 908	440
199 185 913	440
199 185 914	440
199 185 915	440
199 185 916	440
199 185 917	440
199 185 918	440
199 188 353	441
199 188 354	441
199 188 355	441
199 188 356	441
199 188 357	441
199 188 358	441
199 188 363	441
199 188 364	441
199 188 365	441
199 188 366	441

Index

Code	Page
199 188 367	441
199 188 368	441
199 188 393	443
199 188 394	443
199 188 395	443
199 188 396	443
199 188 397	443
199 188 398	443
199 188 403	443
199 188 404	443
199 188 405	443
199 188 406	443
199 188 407	443
199 188 408	443
199 188 443	442
199 188 444	442
199 188 445	442
199 188 446	442
199 188 447	442
199 188 448	442
199 189 008	169
199 189 009	169
199 189 010	169
199 189 018	169
199 189 019	169
199 189 020	169
199 189 068	170
199 189 069	170
199 189 070	170
199 189 078	170
199 189 079	170
199 189 080	170
199 190 600	474
199 190 601	474
199 190 602	474
199 190 603	474
199 190 604	474
199 190 605	474
199 230 002	122
199 230 003	122
199 230 004	122
199 230 005	122
199 230 006	122
199 230 007	122
199 230 008	122
199 230 012	122
199 230 013	122
199 230 014	122
199 230 015	122
199 230 016	122
199 230 017	122
199 230 018	122
199 230 022	123
199 230 023	123
199 230 024	123
199 230 025	123
199 230 026	123
199 230 027	123
199 230 028	123
199 230 032	123
199 230 033	123
199 230 034	123
199 230 035	123
199 230 036	123
199 230 037	123
199 230 038	123
199 230 042	126
199 230 043	126
199 230 044	126
199 230 045	126
199 230 046	126
199 230 047	126
199 230 048	126
199 230 052	126
199 230 053	126
199 230 054	126
199 230 055	126
199 230 056	126
199 230 057	126
199 230 058	126
199 230 062	127
199 230 063	127
199 230 064	127
199 230 065	127
199 230 066	127
199 230 067	127
199 230 068	127
199 230 072	127
199 230 073	127
199 230 074	127
199 230 075	127
199 230 076	127
199 230 077	127
199 230 078	127
199 230 082	130
199 230 083	130
199 230 084	130
199 230 085	130
199 230 086	130
199 230 087	130
199 230 088	130
199 230 092	130
199 230 093	130
199 230 094	130
199 230 095	130
199 230 096	130
199 230 097	130
199 230 098	130
199 230 102	131
199 230 103	131
199 230 104	131
199 230 105	131
199 230 106	131
199 230 107	131
199 230 108	131
199 230 112	131
199 230 113	131
199 230 114	131
199 230 115	131
199 230 116	131
199 230 117	131
199 230 118	131
199 230 122	134
199 230 123	134
199 230 124	134
199 230 125	134
199 230 126	134
199 230 127	134
199 230 128	134
199 230 129	134
199 230 130	134
199 230 131	134
199 230 132	134
199 230 133	134
199 230 134	134
199 230 135	134
199 230 136	134
199 230 137	134
199 230 138	134
199 230 139	134
199 230 140	134
199 230 141	134
199 230 142	135
199 230 143	135
199 230 144	135
199 230 145	135
199 230 146	135
199 230 147	135
199 230 148	135
199 230 149	135
199 230 150	135
199 230 151	135
199 230 152	135
199 230 153	135
199 230 154	135
199 230 155	135
199 230 156	135
199 230 157	135
199 230 158	135
199 230 159	135
199 230 160	135
199 230 161	135
199 230 162	139
199 230 163	139
199 230 164	139
199 230 165	139
199 230 166	139
199 230 167	139
199 230 168	139
199 230 169	139
199 230 170	139
199 230 171	139
199 230 172	139
199 230 173	139
199 230 174	139
199 230 175	139
199 230 176	139
199 230 177	139
199 230 178	139
199 230 179	139
199 230 180	139
199 230 181	139
199 230 182	140
199 230 183	140
199 230 184	140
199 230 185	140
199 230 186	140
199 230 187	140
199 230 188	140
199 230 189	140
199 230 190	140
199 230 191	140
199 230 192	140
199 230 193	140
199 230 194	140
199 230 195	140
199 230 196	140
199 230 197	140
199 230 198	140
199 230 199	140
199 230 200	140
199 230 201	140
199 230 202	144
199 230 203	144
199 230 204	144
199 230 205	144
199 230 206	144
199 230 207	144
199 230 208	144
199 230 209	144
199 230 210	144
199 230 211	144
199 230 212	144
199 230 213	144
199 230 214	144
199 230 215	144
199 230 216	144
199 230 217	144
199 230 218	144
199 230 219	144
199 230 220	144
199 230 221	144
199 230 222	145
199 230 223	145
199 230 224	145
199 230 225	145
199 230 226	145
199 230 227	145
199 230 228	145
199 230 229	145
199 230 230	145
199 230 231	145
199 230 232	145
199 230 233	145
199 230 234	145
199 230 235	145
199 230 236	145
199 230 237	145
199 230 238	145
199 230 239	145
199 230 240	145
199 230 241	145
199 230 243	125
199 230 244	125
199 230 245	125
199 230 246	125
199 230 247	125
199 230 248	125

Index

Code	Page
199 230 253	125
199 230 254	125
199 230 255	125
199 230 256	125
199 230 257	125
199 230 258	125
199 230 263	129
199 230 264	129
199 230 265	129
199 230 266	129
199 230 267	129
199 230 268	129
199 230 273	129
199 230 274	129
199 230 275	129
199 230 276	129
199 230 277	129
199 230 278	129
199 230 283	133
199 230 284	133
199 230 285	133
199 230 286	133
199 230 287	133
199 230 288	133
199 230 293	133
199 230 294	133
199 230 295	133
199 230 296	133
199 230 297	133
199 230 298	133
199 230 303	137
199 230 304	137
199 230 305	137
199 230 306	137
199 230 307	137
199 230 308	137
199 230 313	137
199 230 314	137
199 230 315	137
199 230 316	137
199 230 317	137
199 230 318	137
199 230 323	142
199 230 324	142
199 230 325	142
199 230 326	142
199 230 327	142
199 230 328	142
199 230 333	142
199 230 334	142
199 230 335	142
199 230 336	142
199 230 337	142
199 230 338	142
199 230 343	147
199 230 344	147
199 230 345	147
199 230 346	147
199 230 347	147
199 230 348	147
199 230 353	147
199 230 354	147
199 230 355	147
199 230 356	147
199 230 357	147
199 230 358	147
199 230 362	124
199 230 363	124
199 230 364	124
199 230 365	124
199 230 366	124
199 230 367	124
199 230 368	124
199 230 372	124
199 230 373	124
199 230 374	124
199 230 375	124
199 230 376	124
199 230 377	124
199 230 378	124
199 230 382	128
199 230 383	128
199 230 384	128
199 230 385	128
199 230 386	128
199 230 387	128
199 230 388	128
199 230 392	128
199 230 393	128
199 230 394	128
199 230 395	128
199 230 396	128
199 230 397	128
199 230 398	128
199 230 642	132
199 230 643	132
199 230 644	132
199 230 645	132
199 230 646	132
199 230 647	132
199 230 648	132
199 230 652	132
199 230 653	132
199 230 654	132
199 230 655	132
199 230 656	132
199 230 657	132
199 230 658	132
199 230 662	136
199 230 663	136
199 230 664	136
199 230 665	136
199 230 666	136
199 230 667	136
199 230 668	136
199 230 669	136
199 230 670	136
199 230 671	136
199 230 672	136
199 230 673	136
199 230 674	136
199 230 675	136
199 230 676	136
199 230 677	136
199 230 678	136
199 230 679	136
199 230 680	136
199 230 681	136
199 230 682	141
199 230 683	141
199 230 684	141
199 230 685	141
199 230 686	141
199 230 687	141
199 230 688	141
199 230 689	141
199 230 690	141
199 230 691	141
199 230 692	141
199 230 693	141
199 230 694	141
199 230 695	141
199 230 696	141
199 230 697	141
199 230 698	141
199 230 699	141
199 230 700	141
199 230 701	141
199 230 712	146
199 230 713	146
199 230 714	146
199 230 715	146
199 230 716	146
199 230 717	146
199 230 718	146
199 230 719	146
199 230 720	146
199 230 721	146
199 230 732	146
199 230 733	146
199 230 734	146
199 230 735	146
199 230 736	146
199 230 737	146
199 230 738	146
199 230 739	146
199 230 740	146
199 230 741	146
199 234 002	329
199 234 003	329
199 234 004	329
199 234 005	329
199 234 006	329
199 234 007	329
199 234 008	329
199 234 012	329
199 234 013	329
199 234 014	329
199 234 015	329
199 234 016	329
199 234 017	329
199 234 018	329
199 234 042	330
199 234 043	330
199 234 044	330
199 234 045	330
199 234 046	330
199 234 047	330
199 234 048	330
199 234 052	330
199 234 053	330
199 234 054	330
199 234 055	330
199 234 056	330
199 234 057	330
199 234 058	330
199 234 082	331
199 234 083	331
199 234 084	331
199 234 085	331
199 234 086	331
199 234 087	331
199 234 088	331
199 234 092	331
199 234 093	331
199 234 094	331
199 234 095	331
199 234 096	331
199 234 097	331
199 234 098	331
199 234 122	332
199 234 123	332
199 234 124	332
199 234 125	332
199 234 126	332
199 234 127	332
199 234 128	332
199 234 129	332
199 234 130	332
199 234 131	332
199 234 132	332
199 234 133	332
199 234 134	332
199 234 135	332
199 234 136	332
199 234 137	332
199 234 138	332
199 234 139	332
199 234 140	332
199 234 141	332
199 234 162	333
199 234 163	333
199 234 164	333
199 234 165	333
199 234 166	333
199 234 167	333
199 234 168	333
199 234 169	333
199 234 170	333
199 234 171	333
199 234 172	333
199 234 173	333
199 234 174	333
199 234 175	333
199 234 176	333
199 234 177	333
199 234 178	333
199 234 179	333

Index

Code	Page
199 234 180	333
199 234 181	333
199 234 202	334
199 234 203	334
199 234 204	334
199 234 205	334
199 234 206	334
199 234 207	334
199 234 208	334
199 234 209	334
199 234 210	334
199 234 211	334
199 234 212	334
199 234 213	334
199 234 214	334
199 234 215	334
199 234 216	334
199 234 217	334
199 234 218	334
199 234 219	334
199 234 220	334
199 234 221	334
199 234 469	138
199 234 470	138
199 234 471	138
199 234 479	138
199 234 480	138
199 234 481	138
199 234 489	143
199 234 490	143
199 234 491	143
199 234 499	143
199 234 500	143
199 234 501	143
199 234 509	148
199 234 510	148
199 234 511	148
199 234 519	148
199 234 520	148
199 234 521	148
199 235 003	335
199 235 004	335
199 235 005	335
199 235 006	335
199 235 007	335
199 235 008	335
199 235 013	335
199 235 014	335
199 235 015	335
199 235 016	335
199 235 017	335
199 235 018	335
199 235 023	338
199 235 024	338
199 235 025	338
199 235 026	338
199 235 027	338
199 235 028	338
199 235 033	338
199 235 034	338
199 235 035	338
199 235 036	338
199 235 037	338
199 235 038	338
199 235 043	341
199 235 044	341
199 235 045	341
199 235 046	341
199 235 047	341
199 235 048	341
199 235 053	341
199 235 054	341
199 235 055	341
199 235 056	341
199 235 057	341
199 235 058	341
199 235 063	344
199 235 064	344
199 235 065	344
199 235 066	344
199 235 067	344
199 235 068	344
199 235 069	344
199 235 070	344
199 235 071	344
199 235 073	344
199 235 074	344
199 235 075	344
199 235 076	344
199 235 077	344
199 235 078	344
199 235 079	344
199 235 080	344
199 235 081	344
199 235 083	348
199 235 084	348
199 235 085	348
199 235 086	348
199 235 087	348
199 235 088	348
199 235 089	348
199 235 090	348
199 235 091	348
199 235 093	348
199 235 094	348
199 235 095	348
199 235 096	348
199 235 097	348
199 235 098	348
199 235 099	348
199 235 100	348
199 235 101	348
199 235 103	352
199 235 104	352
199 235 105	352
199 235 106	352
199 235 107	352
199 235 108	352
199 235 109	352
199 235 110	352
199 235 111	352
199 235 113	352
199 235 114	352
199 235 115	352
199 235 116	352
199 235 117	352
199 235 118	352
199 235 119	352
199 235 120	352
199 235 121	352
199 235 123	337
199 235 124	337
199 235 125	337
199 235 126	337
199 235 127	337
199 235 128	337
199 235 133	337
199 235 134	337
199 235 135	337
199 235 136	337
199 235 137	337
199 235 138	337
199 235 143	340
199 235 144	340
199 235 145	340
199 235 146	340
199 235 147	340
199 235 148	340
199 235 153	340
199 235 154	340
199 235 155	340
199 235 156	340
199 235 157	340
199 235 158	340
199 235 163	343
199 235 164	343
199 235 165	343
199 235 166	343
199 235 167	343
199 235 168	343
199 235 173	343
199 235 174	343
199 235 175	343
199 235 176	343
199 235 177	343
199 235 178	343
199 235 183	346
199 235 184	346
199 235 185	346
199 235 186	346
199 235 187	346
199 235 188	346
199 235 193	346
199 235 194	346
199 235 195	346
199 235 196	346
199 235 197	346
199 235 198	346
199 235 203	350
199 235 204	350
199 235 205	350
199 235 206	350
199 235 207	350
199 235 208	350
199 235 213	350
199 235 214	350
199 235 215	350
199 235 216	350
199 235 217	350
199 235 218	350
199 235 223	354
199 235 224	354
199 235 225	354
199 235 226	354
199 235 227	354
199 235 228	354
199 235 233	354
199 235 234	354
199 235 235	354
199 235 236	354
199 235 237	354
199 235 238	354
199 235 543	336
199 235 544	336
199 235 545	336
199 235 546	336
199 235 547	336
199 235 548	336
199 235 553	336
199 235 554	336
199 235 555	336
199 235 556	336
199 235 557	336
199 235 558	336
199 235 563	339
199 235 564	339
199 235 565	339
199 235 566	339
199 235 567	339
199 235 568	339
199 235 573	339
199 235 574	339
199 235 575	339
199 235 576	339
199 235 577	339
199 235 578	339
199 235 583	342
199 235 584	342
199 235 585	342
199 235 586	342
199 235 587	342
199 235 588	342
199 235 593	342
199 235 594	342
199 235 595	342
199 235 596	342
199 235 597	342
199 235 598	342
199 235 603	345
199 235 604	345
199 235 605	345
199 235 606	345
199 235 607	345
199 235 608	345
199 235 609	345
199 235 610	345
199 235 611	345
199 235 613	345

Index

Code	Page
199 235 614	345
199 235 615	345
199 235 616	345
199 235 617	345
199 235 618	345
199 235 619	345
199 235 620	345
199 235 621	345
199 235 623	349
199 235 624	349
199 235 625	349
199 235 626	349
199 235 627	349
199 235 628	349
199 235 629	349
199 235 630	349
199 235 631	349
199 235 633	349
199 235 634	349
199 235 635	349
199 235 636	349
199 235 637	349
199 235 638	349
199 235 639	349
199 235 640	349
199 235 641	349
199 235 643	353
199 235 644	353
199 235 645	353
199 235 646	353
199 235 647	353
199 235 648	353
199 235 649	353
199 235 650	353
199 235 651	353
199 235 653	353
199 235 654	353
199 235 655	353
199 235 656	353
199 235 657	353
199 235 658	353
199 235 659	353
199 235 660	353
199 235 661	353
199 235 769	347
199 235 770	347
199 235 771	347
199 235 779	347
199 235 780	347
199 235 781	347
199 235 789	351
199 235 790	351
199 235 791	351
199 235 799	351
199 235 800	351
199 235 801	351
199 235 809	355
199 235 810	355
199 235 811	355
199 235 819	355
199 235 820	355
199 235 821	355

Code	Page
199 240 002	217
199 240 003	217
199 240 004	217
199 240 005	217
199 240 006	217
199 240 007	217
199 240 008	217
199 240 009	217
199 240 010	217
199 240 022	217
199 240 023	217
199 240 024	217
199 240 025	217
199 240 026	217
199 240 027	217
199 240 028	217
199 240 029	217
199 240 030	217
199 240 042	218
199 240 043	218
199 240 044	218
199 240 045	218
199 240 046	218
199 240 047	218
199 240 048	218
199 240 049	218
199 240 050	218
199 240 062	218
199 240 063	218
199 240 064	218
199 240 065	218
199 240 066	218
199 240 067	218
199 240 068	218
199 240 069	218
199 240 070	218
199 240 082	219
199 240 083	219
199 240 084	219
199 240 085	219
199 240 086	219
199 240 087	219
199 240 088	219
199 240 089	219
199 240 090	219
199 240 091	219
199 240 092	219
199 240 102	219
199 240 103	219
199 240 104	219
199 240 105	219
199 240 106	219
199 240 107	219
199 240 108	219
199 240 109	219
199 240 110	219
199 240 111	219
199 240 112	219
199 243 002	227
199 243 003	227
199 243 004	227
199 243 005	227

Code	Page
199 243 006	227
199 243 007	227
199 243 008	227
199 243 009	227
199 243 010	227
199 243 022	227
199 243 023	227
199 243 024	227
199 243 025	227
199 243 026	227
199 243 027	227
199 243 028	227
199 243 029	227
199 243 030	227
199 243 042	228
199 243 043	228
199 243 044	228
199 243 045	228
199 243 046	228
199 243 047	228
199 243 048	228
199 243 049	228
199 243 050	228
199 243 062	228
199 243 063	228
199 243 064	228
199 243 065	228
199 243 066	228
199 243 067	228
199 243 068	228
199 243 069	228
199 243 070	228
199 243 082	229
199 243 083	229
199 243 084	229
199 243 085	229
199 243 086	229
199 243 087	229
199 243 088	229
199 243 089	229
199 243 090	229
199 243 102	229
199 243 103	229
199 243 104	229
199 243 105	229
199 243 106	229
199 243 107	229
199 243 108	229
199 243 109	229
199 243 110	229
199 285 002	172
199 285 003	172
199 285 004	172
199 285 005	172
199 285 006	172
199 285 007	172
199 285 008	172
199 285 012	172
199 285 013	172
199 285 014	172
199 285 015	172
199 285 016	172

Code	Page
199 285 017	172
199 285 018	172
199 285 022	171
199 285 023	171
199 285 024	171
199 285 025	171
199 285 026	171
199 285 027	171
199 285 028	171
199 285 032	171
199 285 033	171
199 285 034	171
199 285 035	171
199 285 036	171
199 285 037	171
199 285 038	171
199 285 042	176
199 285 043	176
199 285 044	176
199 285 045	176
199 285 046	176
199 285 047	176
199 285 048	176
199 285 052	176
199 285 053	176
199 285 054	176
199 285 055	176
199 285 056	176
199 285 057	176
199 285 058	176
199 285 062	175
199 285 063	175
199 285 064	175
199 285 065	175
199 285 066	175
199 285 067	175
199 285 068	175
199 285 072	175
199 285 073	175
199 285 074	175
199 285 075	175
199 285 076	175
199 285 077	175
199 285 078	175
199 285 182	174
199 285 183	174
199 285 184	174
199 285 185	174
199 285 186	174
199 285 187	174
199 285 188	174
199 285 192	174
199 285 193	174
199 285 194	174
199 285 195	174
199 285 196	174
199 285 197	174
199 285 198	174
199 285 202	173
199 285 203	173
199 285 204	173
199 285 205	173

Index

Code	Page
199 285 206	173
199 285 207	173
199 285 208	173
199 285 212	173
199 285 213	173
199 285 214	173
199 285 215	173
199 285 216	173
199 285 217	173
199 285 218	173
199 285 222	178
199 285 223	178
199 285 224	178
199 285 225	178
199 285 226	178
199 285 227	178
199 285 228	178
199 285 232	178
199 285 233	178
199 285 234	178
199 285 235	178
199 285 236	178
199 285 237	178
199 285 238	178
199 285 242	177
199 285 243	177
199 285 244	177
199 285 245	177
199 285 246	177
199 285 247	177
199 285 248	177
199 285 252	177
199 285 253	177
199 285 254	177
199 285 255	177
199 285 256	177
199 285 257	177
199 285 258	177
199 285 643	374
199 285 644	374
199 285 645	374
199 285 646	374
199 285 647	374
199 285 648	374
199 285 653	374
199 285 654	374
199 285 655	374
199 285 656	374
199 285 657	374
199 285 658	374
199 285 663	445
199 285 664	445
199 285 665	445
199 285 666	445
199 285 667	445
199 285 668	445
199 285 673	445
199 285 674	445
199 285 675	445
199 285 676	445
199 285 677	445
199 285 678	445
199 285 702	371
199 285 703	371
199 285 704	371
199 285 705	371
199 285 706	371
199 285 707	371
199 285 708	371
199 285 712	371
199 285 713	371
199 285 714	371
199 285 715	371
199 285 716	371
199 285 717	371
199 285 718	371
199 285 722	372
199 285 723	372
199 285 724	372
199 285 725	372
199 285 726	372
199 285 727	372
199 285 728	372
199 285 732	372
199 285 733	372
199 285 734	372
199 285 735	372
199 285 736	372
199 285 737	372
199 285 738	372
199 285 742	369
199 285 743	369
199 285 744	369
199 285 745	369
199 285 746	369
199 285 747	369
199 285 748	369
199 285 752	369
199 285 753	369
199 285 754	369
199 285 755	369
199 285 756	369
199 285 757	369
199 285 758	369
199 285 762	370
199 285 763	370
199 285 764	370
199 285 765	370
199 285 766	370
199 285 767	370
199 285 768	370
199 285 772	370
199 285 773	370
199 285 774	370
199 285 775	370
199 285 776	370
199 285 777	370
199 285 778	370
199 285 863	373
199 285 864	373
199 285 865	373
199 285 866	373
199 285 867	373
199 285 868	373
199 285 873	373
199 285 874	373
199 285 875	373
199 285 876	373
199 285 877	373
199 285 878	373
199 285 883	444
199 285 884	444
199 285 885	444
199 285 886	444
199 285 887	444
199 285 888	444
199 285 893	444
199 285 894	444
199 285 895	444
199 285 896	444
199 285 897	444
199 285 898	444
199 288 123	375
199 288 124	375
199 288 125	375
199 288 126	375
199 288 127	375
199 288 128	375
199 288 133	375
199 288 134	375
199 288 135	375
199 288 136	375
199 288 137	375
199 288 138	375
199 288 143	446
199 288 144	446
199 288 145	446
199 288 146	446
199 288 147	446
199 288 148	446
199 288 153	446
199 288 154	446
199 288 155	446
199 288 156	446
199 288 157	446
199 288 158	446
700 254 308	505
700 254 309	505
700 254 310	505
700 254 336	506
700 254 337	506
700 254 338	506
700 254 342	506
700 254 343	506
700 254 344	506
700 254 376	506
700 254 377	506
700 254 378	506
700 254 379	506
700 254 380	506
700 254 381	506
700 254 404	505
700 254 405	505
700 254 406	505
700 278 354	493
720 600 236	60
720 600 237	60
720 600 238	60
720 600 239	60
720 600 240	60
720 600 241	60
720 600 242	60
720 600 243	60
720 600 246	60
720 600 247	60
720 600 248	60
720 600 249	61
720 600 250	61
720 600 251	61
720 600 252	61
720 600 253	61
720 600 257	60
720 600 258	60
720 600 268	60
720 690 005	61
720 690 006	61
720 690 007	61
720 690 008	61
720 690 009	61
720 690 010	61
720 690 011	61
720 690 012	61
720 690 405	61
720 910 209	36
720 910 210	36
720 910 211	36
720 910 709	35
720 910 710	35
720 910 711	35
721 000 106	21
721 000 107	21
721 000 108	21
721 000 109	21
721 000 110	21
721 000 111	21
721 000 112	21, 289
721 000 113	21
721 000 114	21
721 000 116	21, 289
721 000 117	21
721 001 106	289
721 001 107	289
721 001 108	289
721 001 109	289
721 001 110	289
721 001 111	289
721 001 113	289
721 001 115	289
721 001 117	289
721 010 120	21
721 010 122	21
721 010 123	21
721 010 125	21
721 011 120	289
721 100 101	22
721 100 102	22
721 100 103	22
721 100 104	22

Index

Code	Page
721 100 105	22
721 100 106	22
721 100 107	22
721 100 108	22
721 100 109	22
721 100 110	22
721 100 111	22
721 100 112	22, 290
721 100 113	22
721 100 114	22
721 100 115	22
721 100 116	22, 290
721 100 117	22
721 100 119	22
721 100 120	22
721 100 121	22
721 100 204	32
721 100 205	32
721 100 206	32
721 100 207	32
721 100 208	32
721 100 209	32
721 100 210	32
721 100 211	32
721 100 306	22
721 100 307	22
721 100 308	22
721 100 309	22
721 100 310	22
721 100 311	22
721 101 105	290
721 101 106	290
721 101 107	290
721 101 108	290
721 101 109	290
721 101 110	290
721 101 111	290
721 101 113	290
721 101 115	290
721 101 117	290
721 101 206	295
721 101 207	295
721 101 208	295
721 101 605	41
721 101 606	41
721 101 607	41
721 101 608	41
721 101 609	41
721 101 610	41
721 101 611	41
721 150 105	23
721 150 106	23
721 150 107	23
721 150 108	23
721 150 109	23
721 150 110	23
721 150 111	23
721 150 112	23, 290
721 150 113	23
721 150 114	23
721 150 115	23
721 150 116	23, 290
721 150 117	23
721 150 119	23
721 150 120	23
721 150 121	23
721 150 122	23
721 150 123	23
721 150 125	23
721 150 306	23
721 150 307	23
721 150 308	23
721 150 309	23
721 150 310	23
721 150 311	23
721 151 105	290
721 151 106	290
721 151 107	290
721 151 108	290
721 151 109	290
721 151 110	290
721 151 111	290
721 151 113	290
721 151 115	290
721 151 117	290
721 151 120	290
721 200 009	25
721 200 010	25
721 200 011	25
721 200 101	24
721 200 102	24
721 200 103	24
721 200 104	24
721 200 105	24
721 200 106	24
721 200 107	24
721 200 108	24
721 200 109	24
721 200 110	24
721 200 111	24
721 200 112	24, 291
721 200 113	24
721 200 114	24
721 200 115	24
721 200 116	24, 291
721 200 117	24
721 200 119	24
721 200 120	24
721 200 121	24
721 200 122	24
721 200 123	24
721 200 125	24
721 200 132	25
721 200 133	25
721 200 134	25
721 200 135	25
721 200 136	25
721 200 137	25
721 200 138	25
721 200 139	25
721 200 140	25
721 200 141	25
721 200 142	25
721 200 144	25
721 200 145	25
721 200 146	25
721 200 147	25
721 200 148	25
721 200 149	25, 294
721 200 150	25
721 200 151	25
721 200 152	25
721 200 153	25
721 200 154	25
721 200 155	25
721 200 156	25
721 200 157	25
721 200 159	25
721 200 161	25
721 200 162	25
721 200 164	25
721 200 165	25
721 200 167	25
721 200 169	25
721 200 170	25
721 200 172	25
721 200 174	25
721 200 176	25
721 200 178	25
721 200 180	25
721 200 181	25
721 200 182	25
721 200 183	25
721 200 184	25
721 200 204	32
721 200 205	32
721 200 206	32
721 200 207	32
721 200 208	32
721 200 209	32
721 200 210	32
721 200 211	32
721 200 306	24
721 200 307	24
721 200 308	24
721 200 309	24
721 200 310	24
721 200 311	24
721 201 009	294
721 201 010	294
721 201 011	294
721 201 105	291
721 201 106	291
721 201 107	291
721 201 108	291
721 201 109	291
721 201 110	291
721 201 111	291
721 201 113	291
721 201 115	291
721 201 117	291
721 201 120	291
721 201 134	294
721 201 137	294
721 201 138	294
721 201 141	294
721 201 147	294
721 201 151	294
721 201 164	294
721 201 170	294
721 201 178	294
721 201 205	296
721 201 206	296
721 201 207	296
721 201 208	296
721 201 605	41
721 201 606	41
721 201 607	41
721 201 608	41
721 201 609	41
721 201 610	41
721 201 611	41
721 250 103	26
721 250 104	26
721 250 105	26
721 250 106	26
721 250 107	26
721 250 108	26
721 250 109	26
721 250 110	26
721 250 111	26
721 250 112	26, 292
721 250 113	26
721 250 114	26
721 250 115	26
721 250 116	26, 292
721 250 117	26
721 250 119	26
721 250 120	26
721 250 121	26
721 251 106	292
721 251 107	292
721 251 108	292
721 251 109	292
721 251 110	292
721 251 111	292
721 251 113	292
721 251 115	292
721 300 103	26
721 300 104	26
721 300 105	26
721 300 106	26
721 300 107	26
721 300 108	26
721 300 109	26
721 300 110	26
721 300 111	26
721 300 112	26, 291
721 300 113	26
721 300 114	26
721 301 107	291
721 301 108	291
721 301 109	291
721 301 110	291
721 301 111	291
721 310 006	75
721 310 007	75
721 310 008	75

Index

Code	Page
721 310 009	75
721 310 010	75
721 310 011	75
721 310 036	75
721 310 037	75
721 310 038	75
721 310 039	75
721 310 040	75
721 310 041	75
721 310 306	306
721 310 307	306
721 310 308	306
721 310 309	306
721 310 310	306
721 310 311	306
721 310 336	306
721 310 337	306
721 310 338	306
721 310 339	306
721 310 340	306
721 310 341	306
721 310 506	307
721 310 507	307
721 310 508	307
721 310 509	307
721 310 510	307
721 310 511	307
721 310 536	307
721 310 537	307
721 310 538	307
721 310 539	307
721 310 540	307
721 310 541	307
721 312 012	75
721 312 013	75
721 312 014	75
721 312 015	75
721 312 016	75
721 312 017	75
721 312 019	75
721 312 020	75
721 312 021	75
721 312 023	75
721 314 000	76
721 314 001	76
721 314 002	76
721 500 103	54
721 500 104	54
721 500 105	54
721 500 106	54, 494
721 500 107	54, 494
721 500 108	54, 494
721 500 109	54, 494
721 500 110	54, 494
721 500 111	54, 494
721 500 162	54, 300
721 500 163	54
721 500 164	54
721 500 405	55
721 500 406	55
721 500 407	55
721 500 408	55
721 500 409	55
721 500 410	55
721 500 411	55
721 510 003	46
721 510 004	46
721 510 005	46
721 510 006	46
721 510 007	46
721 510 008	46
721 510 009	46
721 510 010	46
721 510 011	46
721 510 012	46
721 510 014	46
721 510 028	46
721 510 029	46
721 510 030	46
721 510 031	46
721 510 032	46
721 510 033	46
721 510 034	46
721 510 035	46
721 510 036	46
721 510 037	46
721 510 039	46
721 510 103	44
721 510 104	44
721 510 105	44
721 510 106	44
721 510 107	44
721 510 108	44
721 510 109	44
721 510 110	44
721 510 111	44
721 510 112	44, 299
721 510 114	44
721 510 128	44
721 510 129	44
721 510 130	44
721 510 131	44
721 510 132	44
721 510 133	44
721 510 134	44
721 510 135	44
721 510 136	44
721 510 137	44, 299
721 510 139	44
721 510 153	422
721 510 154	422
721 510 155	422
721 510 156	422
721 510 157	422
721 510 158	422
721 510 159	422
721 510 160	422
721 510 161	422
721 510 162	422
721 510 163	422
721 510 164	422
721 510 178	422
721 510 179	422
721 510 180	422
721 510 181	422
721 510 182	422
721 510 183	422
721 510 184	422
721 510 185	422
721 510 186	422
721 510 187	422
721 510 188	422
721 510 189	422
721 510 204	46
721 510 205	46
721 510 206	46
721 510 207	46
721 510 208	46
721 510 209	46
721 510 210	46
721 510 211	46
721 510 213	46
721 510 238	46
721 510 305	44
721 510 306	44
721 510 307	44
721 510 308	44
721 510 309	44
721 510 310	44
721 510 311	44
721 510 313	44
721 510 330	44
721 510 331	44
721 510 332	44
721 510 333	44
721 510 334	44
721 510 335	44
721 510 336	44
721 510 338	44
721 510 405	47
721 510 406	47
721 510 407	47
721 510 408	47
721 510 409	47
721 510 410	47
721 510 411	47
721 510 604	51
721 510 605	51
721 510 606	51
721 510 607	51
721 510 608	51
721 510 609	51
721 510 610	51
721 510 611	51
721 511 105	299
721 511 106	299
721 511 107	299
721 511 108	299
721 511 109	299
721 511 110	299
721 511 111	299
721 511 130	299
721 511 131	299
721 511 132	299
721 511 133	299
721 511 134	299
721 511 135	299
721 511 136	299
721 511 205	300
721 511 206	300
721 511 207	300
721 511 208	300
721 511 209	300
721 511 210	300
721 511 211	300
721 513 105	45
721 513 106	45
721 513 107	45
721 513 108	45
721 513 109	45
721 513 110	45
721 513 111	45
721 514 105	45
721 514 106	45
721 514 107	45
721 514 108	45
721 514 109	45
721 514 110	45
721 514 111	45
721 514 205	47
721 514 206	47
721 514 207	47
721 514 208	47
721 514 209	47
721 514 210	47
721 514 211	47
721 515 106	299
721 515 107	299
721 515 108	299
721 515 109	299
721 515 110	299
721 515 111	299
721 515 130	422
721 515 131	422
721 515 132	422
721 515 133	422
721 515 134	422
721 515 135	422
721 515 156	299
721 515 157	299
721 515 158	299
721 515 159	299
721 515 160	299
721 515 161	299
721 515 180	422
721 515 181	422
721 515 182	422
721 515 183	422
721 515 184	422
721 515 185	422
721 515 606	300
721 515 607	300
721 515 608	300
721 515 609	300
721 515 610	300
721 515 611	300
721 530 306	50
721 530 307	50

Index

Code	Page
721 530 308	50
721 530 309	50
721 530 310	50
721 530 311	50
721 530 312	50, 303
721 530 313	50
721 530 806	50
721 530 807	50
721 530 808	50
721 530 809	50
721 530 810	50
721 530 811	50
721 530 812	50, 303
721 530 813	50
721 531 306	303
721 531 307	303
721 531 308	303
721 531 309	303
721 531 310	303
721 531 311	303
721 531 313	303
721 531 806	303
721 531 807	303
721 531 808	303
721 531 809	303
721 531 810	303
721 531 811	303
721 531 813	303
721 540 205	47
721 540 206	47
721 540 207	47
721 540 208	47
721 540 209	47
721 540 210	47
721 540 211	47
721 540 230	47
721 540 231	47
721 540 232	47
721 540 233	47
721 540 234	47
721 540 235	47
721 540 236	47
721 540 705	48
721 540 706	48
721 540 707	48
721 540 708	48
721 540 709	48
721 540 710	48
721 540 711	48
721 540 730	48
721 540 731	48
721 540 732	48
721 540 733	48
721 540 734	48
721 540 735	48
721 540 736	48
721 545 505	48
721 545 506	48
721 545 507	48
721 545 508	48
721 545 509	48
721 545 510	48
721 545 511	48
721 545 530	48
721 545 531	48
721 545 532	48
721 545 533	48
721 545 534	48
721 545 535	48
721 545 536	48
721 550 305	49
721 550 306	49
721 550 307	49
721 550 506	49
721 550 507	49
721 550 508	49
721 550 509	49
721 550 510	49
721 550 511	49
721 550 512	49, 302
721 550 513	49
721 550 906	49
721 550 907	49
721 550 908	50
721 550 909	50
721 550 910	50
721 550 911	50
721 550 912	50, 303
721 550 913	50
721 550 957	49
721 550 958	50
721 550 967	49
721 550 968	50
721 551 405	295
721 551 406	295
721 551 506	302
721 551 507	302
721 551 508	302
721 551 509	302
721 551 510	302
721 551 511	302
721 551 513	302
721 551 906	303
721 551 907	303
721 551 908	303
721 551 909	303
721 551 910	303
721 551 911	303
721 551 913	303
721 600 004	56
721 600 005	56
721 600 006	56
721 600 007	56
721 600 008	56
721 600 009	56
721 600 010	56
721 600 011	56
721 600 012	56
721 600 013	56
721 600 014	56
721 600 108	526, 530
721 600 109	526, 530
721 600 110	526, 530
721 600 111	526, 530
721 600 112	54, 526, 530
721 600 113	54
721 600 305	55
721 600 306	55
721 600 307	55
721 600 406	494
721 600 407	494
721 600 408	494
721 600 409	494
721 600 410	494
721 600 411	494
721 600 654	55
721 600 655	55
721 600 656	55
721 600 657	55
721 600 658	55
721 600 659	55
721 600 660	55
721 600 661	55
721 601 105	300
721 601 106	300, 301, 494
721 601 107	300, 301, 494
721 601 108	300, 301, 494
721 601 109	300, 301, 494
721 601 110	300, 301, 494
721 601 111	300, 301, 494
721 601 113	300
721 605 106	301, 494
721 605 107	301, 494
721 605 108	301, 494
721 605 109	301, 494
721 605 110	301, 494
721 605 111	301, 494
721 605 112	301
721 605 113	301
721 605 114	301
721 605 606	301
721 605 607	301
721 605 608	301
721 605 609	301
721 605 610	301
721 640 102	302
721 641 123	302
721 645 107	302
721 645 108	302
721 645 109	302
721 645 110	302
721 645 111	302
721 690 008	529
721 690 009	529
721 690 010	529
721 690 011	525, 529
721 700 005	67
721 700 006	67
721 700 007	67
721 700 008	67
721 700 009	67
721 700 010	67
721 700 011	67
721 700 012	67
721 700 013	67
721 700 014	67
721 700 015	67
721 700 016	67
721 700 017	67
721 700 019	67
721 700 020	67
721 700 021	67
721 700 136	68
721 700 137	68
721 700 138	68
721 700 139	68
721 700 140	68
721 700 506	71
721 700 507	71
721 700 508	71
721 700 509	71
721 700 510	71
721 700 511	71
721 700 512	71
721 700 513	71
721 700 514	71
721 700 516	71
721 700 517	71
721 700 520	71
721 700 521	71
721 700 522	71
721 700 523	71
721 700 524	71
721 700 525	71
721 702 206	68
721 702 207	68
721 702 208	68
721 702 209	68
721 702 210	68
721 702 211	68
721 702 212	68
721 702 213	68
721 702 214	68
721 702 216	68
721 702 217	68
721 702 220	68
721 730 206	69
721 730 207	69
721 730 208	69
721 730 209	69
721 730 210	69
721 730 211	69
721 730 212	69
721 730 213	69
721 730 214	69
721 730 216	69
721 730 217	69
721 740 106	70
721 740 107	70
721 740 108	70
721 740 109	70

Index

Code	Page
721 740 110	70
721 740 111	70
721 740 112	70
721 740 113	70
721 740 114	70
721 740 116	70
721 740 117	70
721 790 111	66
721 790 112	66, 305
721 790 113	66
721 790 114	66
721 790 115	66
721 790 116	66, 305
721 790 117	66
721 790 119	66
721 790 120	66
721 790 121	66
721 790 122	66
721 790 123	66
721 790 124	66
721 790 125	66
721 791 106	305
721 791 107	305
721 791 108	305
721 791 109	305
721 791 110	305
721 791 111	305
721 791 113	305
721 791 115	305
721 791 117	305
721 791 120	305
721 791 122	305
721 791 123	305
721 800 105	66
721 800 106	66
721 800 107	66
721 800 108	66
721 800 109	66
721 800 110	66
721 810 105	67
721 810 106	67
721 810 107	67
721 810 108	67
721 810 109	67
721 810 110	67
721 810 111	67
721 810 112	67, 305
721 810 113	67
721 810 114	67
721 810 115	67
721 810 116	67, 305
721 810 117	67
721 810 119	67
721 810 120	67
721 810 121	67
721 810 122	67
721 810 123	67
721 811 111	305
721 811 120	305
721 840 103	59
721 840 104	59
721 840 105	59
721 840 106	59
721 840 107	59
721 840 108	59
721 840 109	59
721 840 110	59
721 840 111	60
721 840 112	60
721 840 114	60
721 840 123	60
721 840 604	60
721 840 605	60
721 840 606	60
721 840 607	60
721 840 608	60
721 840 609	60
721 840 610	60
721 840 611	60
721 841 105	302
721 841 106	302
721 841 107	302
721 841 108	302
721 841 109	302
721 841 110	302
721 841 111	302
721 890 004	56
721 890 005	56
721 890 006	56, 493
721 890 007	56, 493
721 890 008	56, 493, 525
721 890 009	56, 493, 525
721 890 010	56, 493, 525
721 890 011	56, 493
721 890 012	56
721 890 013	56
721 890 014	56
721 890 023	56
721 900 181	30
721 900 300	30
721 900 301	30
721 900 302	30
721 900 303	30
721 900 304	30
721 900 305	30
721 900 306	30
721 900 307	30
721 900 308	30
721 900 309	30
721 900 310	30
721 900 311	30
721 900 312	30
721 900 313	30
721 900 315	30
721 900 319	31
721 900 320	31
721 900 321	31
721 900 322	31
721 900 325	30
721 900 326	30
721 900 329	30
721 900 331	30
721 900 334	30
721 900 337	30
721 900 341	30
721 900 342	30
721 900 346	30
721 900 347	30
721 900 348	30
721 900 352	30
721 900 353	30
721 900 354	30
721 900 355	30
721 900 358	30
721 900 359	30
721 900 360	30
721 900 364	30
721 900 365	30
721 900 370	30
721 900 371	30
721 900 372	30
721 900 376	30
721 900 377	30
721 900 378	30
721 900 379	30
721 900 380	30
721 900 381	30
721 900 384	30
721 900 385	30
721 900 386	30
721 900 388	30
721 900 390	30
721 900 391	30
721 900 392	30
721 900 393	30
721 900 394	30
721 900 396	30
721 900 397	30
721 900 398	30
721 900 399	30
721 900 406	34
721 900 407	34
721 900 408	34
721 900 409	34
721 900 410	34
721 900 411	34
721 900 905	28
721 900 906	28
721 900 907	28
721 900 908	28
721 900 909	28
721 900 910	28
721 900 911	28
721 900 912	28, 294
721 900 913	28
721 900 914	28
721 900 915	28
721 900 916	28, 294
721 900 917	28
721 900 919	28
721 900 920	28
721 901 334	293
721 901 337	293
721 901 338	293
721 901 341	293
721 901 342	293
721 901 343	293
721 901 346	293
721 901 347	293
721 901 348	293
721 901 349	293
721 901 352	293
721 901 353	293
721 901 354	293
721 901 355	293
721 901 358	293
721 901 359	293
721 901 360	293
721 901 361	293
721 901 364	293
721 901 370	293
721 901 371	293
721 901 372	293
721 901 374	293
721 901 381	293
721 901 384	293
721 901 388	293
721 901 396	293
721 901 406	297
721 901 407	297
721 901 408	297
721 901 409	297
721 901 410	297
721 901 411	297
721 901 534	295
721 901 537	295
721 901 541	295
721 901 542	295
721 901 905	294
721 901 906	294
721 901 907	294
721 901 908	294
721 901 909	294
721 901 910	294
721 901 911	294
721 901 913	294
721 901 914	294
721 910 090	38
721 910 091	38
721 910 092	38
721 910 101	26
721 910 102	26
721 910 103	26
721 910 104	26
721 910 105	26
721 910 106	26
721 910 107	26
721 910 108	26
721 910 109	26
721 910 110	26
721 910 111	26
721 910 112	26, 292
721 910 113	27
721 910 114	27
721 910 115	27

Index

Code	Page
721 910 116	27, 292
721 910 117	27
721 910 119	27
721 910 120	27
721 910 121	27
721 910 122	27
721 910 123	27
721 910 124	27
721 910 125	27
721 910 204	33
721 910 205	33
721 910 206	33
721 910 207	33
721 910 208	33
721 910 209	33
721 910 210	33
721 910 211	33
721 910 323	29
721 910 325	29
721 910 326	29
721 910 334	29
721 910 337	29
721 910 341	29
721 910 346	29
721 910 352	29
721 910 358	29
721 910 364	29
721 910 370	29
721 910 385	29
721 910 404	34
721 910 434	34
721 910 437	34
721 910 441	34
721 910 446	34
721 910 452	34
721 910 458	34
721 910 555	34
721 910 556	34
721 910 557	34
721 910 558	34
721 910 559	34
721 910 560	34
721 910 561	34
721 910 604	41
721 910 605	41
721 910 606	41
721 910 607	41
721 910 608	41
721 910 609	41
721 910 610	41
721 910 611	41
721 910 705	35
721 910 706	35
721 910 707	35
721 910 708	35
721 910 709	35
721 910 710	35
721 910 711	35
721 910 712	35, 297
721 910 713	35
721 910 714	35
721 910 834	42
721 910 837	42
721 910 841	42
721 910 842	42
721 910 846	42
721 910 852	42
721 910 858	42
721 910 903	29
721 910 905	29
721 910 906	29
721 910 908	29
721 910 909	29
721 910 910	29
721 910 911	29
721 910 912	29
721 910 913	29
721 910 914	29
721 910 915	29
721 910 916	29
721 910 917	29
721 910 918	29
721 910 919	29
721 910 920	29
721 910 921	29
721 910 922	29
721 910 923	29
721 910 924	29
721 910 925	29
721 910 926	29
721 910 927	29
721 910 928	29
721 910 929	29
721 911 005	296
721 911 006	296
721 911 007	296
721 911 008	296
721 911 009	296
721 911 010	296
721 911 011	296
721 911 105	292
721 911 106	292
721 911 107	292
721 911 108	292
721 911 109	292
721 911 110	292
721 911 111	292
721 911 113	292
721 911 115	292
721 911 117	292
721 911 120	292
721 911 386	293
721 911 389	293
721 911 434	298
721 911 555	296
721 911 556	296
721 911 557	296
721 911 558	296
721 911 705	297
721 911 706	297
721 911 707	297
721 911 708	297
721 911 709	297
721 911 710	297
721 911 711	297
721 911 737	297
721 911 741	297
721 911 746	297
721 911 752	297
721 911 758	297
721 911 905	42
721 911 906	42
721 911 907	42
721 911 908	42
721 911 909	42
721 911 910	42
721 911 911	42
721 913 105	27
721 913 106	27
721 913 107	27
721 913 108	27
721 913 109	27
721 913 110	27
721 913 111	27
721 913 113	27
721 913 115	27
721 913 505	35
721 913 506	35
721 913 507	35
721 913 508	35
721 913 905	298
721 913 906	298
721 913 907	298
721 913 908	298
721 913 909	298
721 913 910	298
721 913 911	298
721 913 913	298
721 913 915	298
721 914 206	33
721 914 207	33
721 914 208	33
721 914 209	33
721 914 210	33
721 914 211	33
721 916 012	33
721 916 013	33
721 916 014	33
721 916 204	36
721 916 206	36
721 940 106	39
721 940 107	39
721 940 108	39
721 940 131	38
721 940 132	38
721 940 133	38
721 940 134	38
721 940 135	38
721 940 136	38
721 940 606	39
721 940 607	39
721 940 608	39
721 940 631	38
721 940 632	38
721 940 633	38
721 940 634	38
721 940 635	38
721 940 636	38
721 950 106	40
721 950 107	40
721 950 108	40
721 950 131	39
721 950 132	39
721 950 133	39
721 950 134	39
721 950 135	39
721 950 136	39
721 950 606	40
721 950 607	40
721 950 608	40
721 950 631	39
721 950 632	39
721 950 633	39
721 950 634	39
721 950 635	39
721 950 636	39
721 960 104	28
721 960 105	28
721 960 106	28
721 960 107	28
721 960 108	28
721 960 109	28
721 960 110	28
721 960 111	28
721 960 112	28, 294
721 960 113	28
721 960 114	28
721 960 116	28, 294
721 960 117	28
721 960 119	28
721 960 120	28
721 960 122	28
721 960 123	28
721 960 303	36
721 960 304	36
721 960 305	36
721 960 306	36
721 960 403	37
721 960 404	37
721 960 405	37
721 960 406	37
721 960 407	37
721 960 408	37
721 960 409	37
721 960 410	37
721 960 411	37
721 960 603	42, 516, 516, 516
721 960 604	42, 516, 516
721 960 605	42, 516
721 960 606	42, 516
721 960 607	42, 516
721 960 608	42
721 960 609	42
721 960 610	42
721 960 611	42
721 960 704	37

Index

Code	Page
721 960 705	37
721 960 706	37
721 960 707	37
721 960 708	37
721 960 709	37
721 960 905	43
721 960 906	43
721 960 907	43
721 960 908	43
721 960 909	43
721 960 910	43
721 960 911	43
721 961 105	294
721 961 106	294
721 961 107	294
721 961 108	294
721 961 109	294
721 961 110	294
721 961 111	294
721 961 113	294
721 961 404	298
721 961 706	37
721 961 707	37
721 961 708	37
721 961 905	43
721 961 906	43
721 961 907	43
721 961 908	43
721 961 909	43
721 961 910	43
721 961 911	43
721 962 115	294
724 600 206	61
724 600 207	61
724 600 208	61
724 600 209	61
724 600 210	61
724 600 211	61
724 600 212	61
724 600 213	61
724 600 655	58
724 600 656	58
724 600 657	58
724 600 658	58
724 600 659	58
724 600 660	58
724 600 661	58
724 600 705	58
724 600 706	58
724 600 707	58
724 600 708	59
724 600 709	59
724 600 710	59
724 600 711	59
724 600 806	61
724 600 807	61
724 600 808	61
724 600 809	61
724 600 810	61
724 600 811	61
724 600 812	61
724 600 813	61
724 605 505	59
724 605 506	59
724 605 507	59
724 605 508	59
724 605 509	59
724 605 510	59
724 605 511	59
724 630 606	62
724 630 607	62
724 630 608	62
724 630 609	62
724 630 610	62
724 630 611	62
724 630 612	62
724 630 613	62
724 690 105	59
724 690 106	59
724 690 107	59
724 690 108	59
724 690 109	59
724 690 110	59
724 690 111	59
727 490 005	65
727 490 006	65
727 490 007	65
727 490 008	65
727 490 009	65
727 490 010	65
727 490 011	65
727 490 012	65
727 490 013	65
727 490 014	65
727 490 108	65
727 490 111	65
727 700 406	69
727 700 407	69
727 700 408	69
727 700 409	69
727 700 410	69
727 700 411	69
727 700 412	69
727 700 413	69
727 700 414	69
727 700 416	69
727 700 417	69
727 700 419	69
727 700 420	69
727 700 421	69
727 700 422	69
727 700 423	69
727 700 424	69
727 700 425	69
734 600 106	57
734 600 107	57
734 600 108	57
734 600 109	57
734 600 110	57
734 600 111	57
735 608 611	494
745 500 012	496
745 500 013	496
745 500 014	496
745 500 015	496
745 500 016	496
745 500 017	496
747 502 013	496
747 502 014	496
747 502 015	496
747 502 016	496
747 502 017	496
747 502 032	496
747 502 033	496
747 502 034	496
747 502 035	496
747 502 036	496
747 502 037	496
747 502 052	493
747 503 012	493, 496
747 503 013	496
747 503 014	496
747 503 015	496
747 503 016	496
747 503 017	496
747502 012**	496
748 400 001	283
748 400 004	63
748 400 005	63, 64, 64
748 400 006	63, 64, 64, 495
748 400 007	63, 64, 64, 495
748 400 008	63, 64, 495
748 400 009	63, 64, 64, 495
748 400 010	63, 64, 495
748 400 011	63, 64, 64, 495
748 400 012	63
748 400 013	63
748 400 030	64
748 400 042	64
748 400 043	64
748 400 044	64
748 400 045	64
748 410 001	519
748 410 002	520
748 410 003	487, 489, 492, 511
748 410 004	63
748 410 005	63
748 410 006	63, 493
748 410 007	63, 493, 520
748 410 008	63, 493, 525, 529
748 410 009	63, 493, 525, 529
748 410 010	63, 493, 525, 529
748 410 011	63, 493, 525, 529
748 410 014	63, 520, 525, 529
748 410 015	63
748 410 016	63
748 410 023	487, 511
748 410 059	487, 487, 489, 489, 492, 492, 510, 510, 519
748 410 062	487, 489, 492, 511
748 410 101	520
748 410 102	520
748 410 106	487, 489, 492, 510, 519
748 410 119	487, 511, 520
748 410 151	487, 489, 492, 511
748 410 231	487, 489, 492, 511
748 410 248	63
748 410 254	487, 511
748 413 000	423
748 413 001	423
748 413 002	423
748 413 003	423
748 413 007	423
748 413 012	423
748 413 013	423
748 413 014	423
748 413 015	423
748 413 016	423
748 413 017	423
748 413 018	423
748 413 019	423
748 413 022	423
748 413 163	423
748 413 173	423
748 413 174	423
748 413 182	423
748 436 001	511, 511
748 436 002	511
748 436 003	511
748 436 004	511
748 436 005	511
748 436 006	511
748 436 007	511
748 436 008	511
748 436 009	511
748 440 018	503
748 440 019	503
748 440 020	503
748 440 021	503
748 440 022	503
748 500 012	496
748 500 013	496
748 500 014	496
748 500 015	496
748 500 016	496
748 500 017	496
748 501 012	493
749 400 005	63, 64

Index

Code	Page
749 400 006	63, 64, 495
749 400 007	63, 64, 64, 495
749 400 008	63, 64, 495
749 400 009	63, 64, 64, 495
749 400 010	63, 64, 495
749 400 011	63, 64, 64, 495
749 400 012	63
749 400 013	63
749 400 042	64
749 400 043	64
749 400 044	64
749 400 045	64
749 410 001	519
749 410 002	520
749 410 003	487, 489, 492, 511
749 410 004	63
749 410 005	63
749 410 006	63, 493
749 410 007	63, 493, 520
749 410 008	63, 493, 525, 529
749 410 009	63, 493, 525, 529
749 410 010	63, 493, 525, 529
749 410 011	63, 493, 525, 529
749 410 014	63, 520, 525, 529
749 410 015	63
749 410 016	63
749 410 023	487, 511
749 410 059	487, 487, 489, 489, 492, 492, 510, 510, 519
749 410 062	487, 489, 492, 511
749 410 101	520
749 410 102	520
749 410 106	487, 489, 492, 510, 519
749 410 119	487, 511, 520
749 410 151	487, 489, 492, 511
749 410 231	487, 489, 492, 511
749 410 248	63
749 410 254	487, 511
749 413 000	423
749 413 001	423
749 413 002	423
749 413 003	423
749 413 007	423
749 413 012	423
749 413 013	423
749 413 014	423
749 413 015	423
749 413 016	423
749 413 017	423
749 413 018	423
749 413 019	423
749 413 022	423
749 413 163	423
749 413 173	423
749 413 174	423
749 413 182	423
749 436 001	511, 511
749 436 002	511
749 436 003	511
749 436 004	511
749 436 005	511
749 436 006	511
749 436 007	511
749 436 008	511
749 436 009	511
749 440 028	503
749 440 029	503
749 440 030	503
749 440 031	503
749 440 032	503
749 500 012	496
749 500 013	496
749 500 014	496
749 500 015	496
749 500 016	496
749 500 017	496
749 501 012	493
752 910 105	27
752 910 106	27
752 910 107	27
752 910 108	27
752 910 109	27
752 910 110	27
752 910 111	27
753 508 606	57
753 508 607	57
753 508 608	57
753 508 609	57
753 508 610	57
753 508 611	57
753 508 616	58
753 508 617	58
753 508 618	58
753 508 619	58
753 508 620	58
753 508 621	58
753 608 412	58
753 608 413	58
753 608 414	58
753 608 612	57
753 608 613	57
753 608 614	57
799 150 003	283
799 298 000	482
799 298 001	482
799 298 002	482
799 298 003	482
799 298 010	482
799 298 011	482
799 298 028	482
799 299 001	483
799 299 002	483
799 299 003	483
799 299 004	483
799 299 005	483
799 302 005	481
799 302 007	481
799 302 011	481
799 302 012	481
799 302 021	481
799 302 022	481
799 302 023	481
799 302 032	481
799 302 033	481
799 302 036	481
800 000 182	106
800 000 183	106
800 000 184	106
800 000 185	106
800 000 186	106
800 000 187	106
800 000 192	106
800 000 193	106
800 000 194	106
800 000 195	106
800 000 196	106
800 000 197	106
800 000 601	424
800 000 602	424
800 000 603	424
800 000 604	424
800 000 605	424
800 000 606	424
800 000 607	424
800 000 608	424
800 000 609	424
800 000 610	424
800 000 611	424
800 000 612	424
800 000 613	424
800 000 614	424
800 000 615	424
800 000 616	424
800 000 617	424
800 000 618	424
800 000 619	424
800 000 620	424
800 047 160	183
800 047 161	183
800 047 162	183
800 047 163	183
800 047 164	183
800 047 165	183
800 047 166	183
800 047 167	183
800 047 168	183
800 047 169	183
800 047 170	183
800 047 171	183
800 047 300	182
800 047 301	182
800 047 303	182
800 047 304	182
800 047 306	182
800 047 308	182
800 047 309	182
800 047 327	192
800 047 328	192
800 047 329	192
800 047 330	192
800 047 331	192
800 047 332	192
800 052 602	107
800 052 603	107
800 052 604	107
800 052 605	107
800 052 606	107
800 052 607	107

General Condition of Supply of Georg Fischer Piping Systems Limited, Schaffhausen

1 General

1.1 These General Conditions shall apply to all Products supplied by Georg Fischer Piping Systems Limited («Georg Fischer») to the Purchaser.
They shall also apply to all future business even when no express reference is made to them.

1.2 Any deviating or supplementary conditions especially Purchaser's general conditions of purchase and verbal agreements shall only be applicable if accepted in writing by Georg Fischer.

1.3 The written form shall be deemed to be fulfilled by all forms of transmission, evidenced in the form of text, such as telefax, e-mail, etc.

2 Tenders

Tenders shall only be binding if they contain a specifically stated period for acceptance.

3 Scope of Delivery

3.1 Georg Fischer's product range is subject to change.

3.2 The confirmation of order shall govern the scope and execution of the contract.

4 Data and Documents

4.1 Technical documents such as drawings, descriptions, illustrations and data on dimensions, performance and weight as well as the reference to standards are for information purposes only. They are not warranted characteristics and are subject to change.

4.2 All technical documents shall remain the exclusive property of Georg Fischer and may only be used for the agreed purposes or as Georg Fischer may consent.

5 Confidentiality, Protection of Personal Data

5.1 Each party shall keep in strict confidence all commercial or technical information relating to the business of the other party, of which it has gained knowledge in the course of its dealing with the other party. Such information shall neither be disclosed to third parties nor used for other purposes than those for which the information has been supplied.

5.2 In the context of the contractual relation with the Purchaser personal data may be processed. The Purchaser agrees to the disclosure of said data to third parties such as foreign subcontractors and suppliers etc .

6 Local Laws and Regulations, Export Controls

6.1 The Purchaser shall bring to the attention of Georg Fischer all local laws and regulations at the place of destination which bear connection with the execution of the contract and the adherence to relevant safety regulations and approval procedures.

6.2 In case of re-exports, Purchaser shall be responsible for compliance with pertinent export control regulations.

7 Price

7.1 Unless agreed otherwise, the prices shall be deemed quoted net ex works (according to Incoterms 2010 of the ICC, or latest version) including standard packing. All supplementary costs such as the cost of carriage, insurance, export-, transit- and import- licences etc. shall be borne by the Purchaser. The Purchaser shall also bear the costs of all taxes, fees, duties etc. connected with the contract.

7.2 If the costs of packing, carriage, insurance, fees and other supplementary costs are included in the tender price or contract price or are referred to specifically in the tender or confirmation of order, Georg Fischer reserve the right to revise their prices accordingly should any change occur in the relevant tariffs.

8 Terms of Payment

8.1 The Purchaser shall make payment in the manner agreed by the parties without any deductions such as discounts, costs, taxes or dues.

8.2 The Purchaser may only withhold or off-set payments due against counter claims which are either expressly acknowledged by Georg Fischer or finally awarded to the Purchaser.
In particular, payment shall still be made when unessential items are still outstanding provided that the Products already delivered are not rendered unusable as a result.

9 Retention of Title

9.1 The Products shall remain the property of Georg Fischer until the Purchaser shall have settled all claims, present and future, which Georg Fischer may have against him.

9.2 Should the Purchaser resell Products to which title is reserved, in the ordinary course of business, he shall hereby be deemed to have tacitly assigned to Georg Fischer the proceeds deriving from their sale together with all collateral rights, securities and reservations of title until all claims held by Georg Fischer shall have been settled. Until revoked by Georg Fischer, this assignment shall not preclude Purchaser's right to collect the assigned receivables.

9.3 To the extent the value of the Products to which title is reserved together with collateral securities exceeds Georg Fischer's claims against the Purchaser by more than 20%, Georg Fischer shall re-assign the above proceeds to Purchaser at his request.

10 Delivery

10.1 The term of delivery shall commence as soon as the contract has been entered into, all official formalities such as import and payment permits have been obtained and all essential technical issues have been settled. The term of delivery shall be deemed duly observed when, upon its expiry, the Products are ready for despatch.

10.2 Delivery is subject to the following conditions, i.e. the term of delivery shall be reasonably extended:

a) if Georg Fischer are not supplied in time with the information necessary for the execution of the contract or if subsequent changes causing delays are made by the Purchaser.

b) if Georg Fischer are prevented from performing the contract by force majeure. Force majeure shall equally be deemed to be any unforeseeable event beyond Georg Fischer's control which renders Georg Fischer's performance commercially unpractical or impossible, such as delayed or defective supplies from sub contractors labour disputes, governmental orders or regulations, shortages in materials or energy, serious disturbances in Georg Fischer's works, such as the total or partial destruction of plant and equipment or the breakdown of essential facilities, serious disruptions in transport facilities, e.g. impassable roads.
Should the effect of force majeure exceed a period of six (6) months, either party may cancel the contract forthwith.
Georg Fischer shall not be liable for any damage or loss of any kind whatsoever resulting the refrom, any suspension or cancellation being without prejudice to Georg Fischer's right to recover all sums due in respect of consignments delivered and costs incurred to date.

c) if the Purchaser is in delay with the fulfilment of his obligations under the contract, in particular, if he does not adhere to the agreed conditions of payment or if he has failed to timely provide the agreed securities.

10.3 If for reasons attributable to Georg Fischer the agreed term of delivery or a reasonable extension thereof is exceeded, Georg Fischer shall not be deemed in default until the Purchaser has granted to Georg Fischer in writing a reasonable extension thereof of not less than one (1) month which equally is not met.
The Purchaser shall then be entitled to the remedies provided at law, it being however understood that, subject to limitations of Art. 16, damage claims shall be limited to max. 10% of the price of the delayed delivery.

10.4 Part shipments shall be allowed and Georg Fischer shall be entitled to invoice for such partial deliveries.

10.5 If the Purchaser fails to take delivery within a reasonable time of Products notified as ready for despatch, Georg Fischer shall be entitled to store the Products at the Purchaser's expense and risk and to invoice them as delivered. If Purchaser fails to effect payment, Georg Fischer shall be entitled to dispose of the Products.

10.6 Should Purchaser cancel an order without justification and should Georg Fischer not insist on the performance of the contract, Georg Fischer shall be entitled to a penalty amounting to 10% of the contract price, Georg Fischer's right to prove and claim higher damages remaining reserved. Purchaser shall be entitled to prove, that Georg Fischer has suffered no or a considerably lower damage than the penalty forfeited.

11 Packing

If the Products are provided with additional packing over and above the standard packing, such packing shall be charged additionally.

12 Passing of Risk

12.1 The risk in the Products shall pass to the Purchaser as soon as they have left Georg Fischer's works (EX WORKS, Incoterms 2010 ICC, or latest version), even if delivery is made carriage-paid, under similar clauses or including installation or when carriage is organized and managed by Georg Fischer.

12.2 If delivery is delayed for reasons beyond Georg Fischer's control, the risk shall pass to the Purchaser when he is notified that the Products are ready for despatch.

13 Carriage and Insurance

13.1 Unless agreed otherwise, the Purchaser shall bear the cost of carriage.

13.2 The Purchaser shall be responsible for transport insurance against damage of whatever kind. Even when such insurance is arranged by Georg Fischer it shall be deemed taken out by the order of and for the account of the Purchaser and at his risk.

13.3 Special requests regarding carriage and insurance shall be communicated to Georg Fischer in due time. Otherwise carriage shall be arranged by Georg Fischer at their discretion, but without responsibility, by the quickest and cheapest method possible.
In case of carriage-paid delivery transport arrangements shall be made by Georg Fischer. If the Purchaser specifies particular requirements, any extra costs involved shall be borne by him.

13.4 In the event of damage or loss of the Products during carriage the Purchaser shall mark the delivery documents accordingly and immediately have the damage ascertained by the carrier. Not readily ascertainable damages sustained during carriage shall be notified to the carrier within six (6) days after receipt of the Products.

14 Inspection, Notification of Defects and Damages

14.1 The Products will be subject to normal inspection by Georg Fischer during manufacture. Additional tests required by the Purchaser shall be agreed upon in writing and shall be charged to the Purchaser.

14.2 It shall be a condition of Georg Fischer's obligation under the warranties stated hereinafter that Georg Fischer be notified in writing by the Purchaser of any purported defect immediately upon discovery. Notice concerning weight, numbers or apparent defects is to be given latest within 30 days from receipt of the Products, notice of other defects immediately latest within seven (7) working days after discovery, in any event within the agreed warranty period.

14.3 Purchaser shall not dispose of allegedly defective Products until all warranty and/or damage claims are finally settled. At its request, defective Products are to be placed at Georg Fischer's disposal.

14.4 At its request, Georg Fischer shall be given the opportunity to inspect the defect and/or damage, prior to commencement of remedial work, either itself or by third party experts.

15 Warranty

15.1 At the written request of the Purchaser, Georg Fischer undertakes to repair or replace at its discretion, as quickly as possible and free of charge, all Products supplied which demonstrably suffer from faulty design, materials or workmanship, from faulty operating or installation instructions or which become defective or unusable due to faulty advice.
In order to protect employees from toxic or radioactive substances which may have been transported through defective parts returned to Georg Fischer's sales organisation, said parts must be accompanied by a Material Safety Disclosure Form. The form may be obtained from Georg Fischer's local sales company or via www.piping.georgfischer.com.
Replaced parts shall become property of Georg Fischer, unless Georg Fischer waives such claim.

15.2 For Products which are manufactured to specifications, drawings or patterns supplied by the Purchaser, Georg Fischer's warranty shall be restricted to proper materials and workmanship.

15.3 The Purchaser shall be entitled to rescind the contract or to demand a reduction of the contract price if
- the repair or replacement of the defective Product is impossible
- the defective Product is not repaired or replaced within a reasonable period
- Georg Fischer refuses the repair or replacement or if for reasons attributable to Georg Fischer the repair or replacement is delayed.

15.4 For Products or essential components manufactured by a third party and supplied by Georg Fischer under this contract, Georg Fischer's warranty is limited to the warranty provided by said third party.

15.5 This warranty shall not apply to damage resulting from normal wear and tear, improper storage and maintenance, failure to observe the operating instructions, overstressing or overloading, unsuitable operating media, unsuitable construction work or unsuitable building ground, improper repairs or alterations by the Purchaser or third parties, the use of other than original spare parts and other reasons beyond Georg Fischer's control.

15.6 No action or claim may be brought by the Purchaser on account of any alleged breach of warranty or any other obligation of Georg Fischer after the expiration of twelve (12) months from receipt of the Products by the end user or at the latest within eighteen (18) months of the Products being despatched by Georg Fischer.

15.7 In case of Products for use in domestic installations or in utilities
- Georg Fischer will assume the costs of dismantling the defective Product and restoring the damaged object up to CHF 1'000'000 per occurrence.
- warranty or damage claims - contrary to Section 15.6 – are time-barred five (5) years from the date of installation or seven (7) years from the production date, whichever is earlier.

16 Limitation of Liability

The rights and remedies of the customer shall be exclusively governed by these General Conditions of Supply and shall be in lieu of any remedies at law. All further claims for damages, reduction of the purchase price, termination of or rescission of the contract are excluded.
In no case whatsoever shall the customer be entitled to claim damages other than compensation for costs of remedying defects in the supplies. This in particular refers, but shall not be limited, to loss of production, loss of use, loss of orders, loss of profit, third party recovery claims and other direct or indirect or consequential damages.
This limitation of liability equally applies to the extent Georg Fischer is liable for acts or omissions of its employees or third parties engaged for the performance of its obligations. It does not apply in case unlawful intent or gross negligence on the part of Georg Fischer's management and in case of Georg Fischer's statutory liability, in particular under applicable product liability laws.

17 Severability

Should any term or clause of these General Conditions in whole or in part be found to be unenforceable or void, all other provisions shall remain in full force and effect and the unenforceable or void provision shall be replaced by a valid provision, which comes closest to the original intention of the unenforceable or invalid provision.

18 Place of Performance and Jurisdiction

18.1 Place of performance for the Products shall be the Georg Fischer works from which the Products are despatched.

18.2 The contract shall be governed by Swiss law without regard to conflict of law provisions that would require the application of another law.

18.3 Any civil action based upon any alleged breach of this contract shall be filed and prosecuted exclusively in the courts of Schaffhausen, Switzerland.
Georg Fischer however reserves the right to file actions in any court having jurisdiction over controversies arising out of or in connection with the present contract.

GF Piping Systems

Worldwide at Home

Our sales companies and representatives
ensure local customer support in over 100 countries

www.gfps.com

Argentina / Southern South America
Georg Fischer Central Plastics
Sudamérica S.R.L.
Buenos Aires, Argentina
Phone +54 11 4512 02 90
gfcentral.ps.ar@georgfischer.com
www.gfps.com/ar

Australia
George Fischer Pty Ltd
Riverwood NSW 2210 Australia
Phone +61 (0) 2 9502 8000
australia.ps@georgfischer.com
www.gfps.com/au

Austria
Georg Fischer
Rohrleitungssysteme GmbH
3130 Herzogenburg
Phone +43 (0) 2782 856 43-0
austria.ps@georgfischer.com
www.gfps.com/at

Belgium / Luxembourg
Georg Fischer NV/SA
1070 Bruxelles/Brüssel
Phone +32 (0) 2 556 40 20
be.ps@georgfischer.com
www.gfps.com/be

Brazil
Georg Fischer Sist. de Tub. Ltda.
04571-020 São Paulo/SP
Phone +55 (0)11 5525 1311
br.ps@georgfischer.com
www.gfps.com/br

Canada
Georg Fischer Piping Systems Ltd
Mississauga, ON L5T 2B2
Phone +1 (905) 670 8005
Fax +1 (905) 670 8513
ca.ps@georgfischer.com
www.gfps.com/ca

China
Georg Fischer Piping Systems Ltd
Shanghai 201319
Phone +86 21 3899 3899
china.ps@georgfischer.com
www.gfps.com/cn

Denmark / Iceland
Georg Fischer A/S
2630 Taastrup
Phone +45 (0) 70 22 19 75
info.dk.ps@georgfischer.com
www.gfps.com/dk

Finland
Georg Fischer AB
01510 VANTAA
Phone +358 (0) 9 586 58 25
Fax +358 (0) 9 586 58 29
info.fi.ps@georgfischer.com
www.gfps.com/fi

France
Georg Fischer SAS
95932 Roissy Charles de Gaulle
Cedex
Phone +33 (0) 1 41 84 68 84
fr.ps@georgfischer.com
www.gfps.com/fr

Germany
Georg Fischer GmbH
73095 Albershausen
Phone +49 (0) 7161 302-0
info.de.ps@georgfischer.com
www.gfps.com/de

India
Georg Fischer Piping Systems Ltd
400 083 Mumbai
Phone +91 224007 2001
branchoffice@georgfischer.com
www.gfps.com/in

Indonesia
George Fischer Pte Ltd –
Representative Office
Phone +62 21 2900 8564
Fax +62 21 2900 8566
sgp.ps@georgfischer.com
www.gfps.com/sg

Italy
Georg Fischer S.p.A.
20063 Cernusco S/N (MI)
Phone +39 02 921 861
it.ps@georgfischer.com
www.gfps.com/it

Japan
Georg Fischer Ltd
556-0011 Osaka,
Phone +81 (0) 6 6635 2691
jp.ps@georgfischer.com
www.gfps.com/jp

Korea
GF Piping Systems
Georg Fischer Korea Co., Ltd.
Unit 2501, U-Tower
120 HeungdeokJungang-ro
(Yeongdeok-dong)
Giheung-gu, Yongin-si, Gyeonggi-do,
Korea
Phone: +82 31 8017 1450
Fax : +82 31 217 1454
kor.ps@georgfischer.com
www.gfps.com/kr

Malaysia
George Fischer (M) Sdn. Bhd.
40460 Shah Alam, Selangor Darul
Ehsan
Phone +60 (0) 3 5122 5585
Fax +603 5122 5575
my.ps@georgfischer.com
www.gfps.com/my

Mexico / Northern Latin America
Georg Fischer S.A. de C.V.
Apodaca, Nuevo Leon
CP66636 Mexico
Phone +52 (81) 1340 8586
Fax +52 (81) 1522 8906
mx.ps@georgfischer.com
www.gfps.com/mx

Middle East
Georg Fischer
Piping Systems (Switzerland) Ltd
Dubai, United Arab Emirates
Phone +971 4 289 49 60
gcc.ps@georgfischer.com
www.gfps.com/int

Netherlands
Georg Fischer N.V.
8161 PA Epe
Phone +31 (0) 578 678 222
nl.ps@georgfischer.com
www.gfps.com/nl

Norway
Georg Fischer AS
1351 Rud
Phone +47 67 18 29 00
no.ps@georgfischer.com
www.gfps.com/no

Philippines
George Fischer Pte Ltd
Representative Office
Phone +632 571 2365
Fax +632 571 2368
sgp.ps@georgfischer.com
www.gfps.com/sg

Poland
Georg Fischer Sp. z o.o.
05-090 Sekocin Nowy
Phone +48 (0) 22 31 31 0 50
poland.ps@georgfischer.com
www.gfps.com/pl

Romania
Georg Fischer
Piping Systems (Switzerland) Ltd
020257 Bucharest - Sector 2
Phone +40 (0) 21 230 53 80
ro.ps@georgfischer.com
www.gfps.com/int

Russia
Georg Fischer
Piping Systems (Switzerland) Ltd
Moscow 125040
Phone +7 495 748 11 44
ru.ps@georgfischer.com
www.gfps.com/ru

Singapore
George Fischer Pte Ltd
11 Tampines Street 92, #04-01/07
528 872 Singapore
Phone +65 6747 0611
Fax +65 6747 0577
sgp.ps@georgfischer.com
www.gfps.com/sg

Spain / Portugal
Georg Fischer S.A.
28046 Madrid
Phone +34 (0) 91 781 98 90
es.ps@georgfischer.com
www.gfps.com/es

Sweden
Georg Fischer AB
117 43 Stockholm
Phone +46 (0) 8 506 775 00
info.se.ps@georgfischer.com
www.gfps.com/se

Switzerland
Georg Fischer
Rohrleitungssysteme (Schweiz) AG
8201 Schaffhausen
Phone +41 (0) 52 631 30 26
ch.ps@georgfischer.com
www.gfps.com/ch

Taiwan
Georg Fischer Co., Ltd
San Chung Dist., New Taipei City
Phone +886 2 8512 2822
Fax +886 2 8512 2823
www.gfps.com/tw

United Kingdom / Ireland
George Fischer Sales Limited
Coventry, CV2 2ST
Phone +44 (0) 2476 535 535
uk.ps@georgfischer.com
www.gfps.com/uk

USA / Caribbean
Georg Fischer LLC
9271 Jeronimo Road
92618 Irvine, CA
Phone +1 714 731 88 00
Fax +1 714 731 62 01
us.ps@georgfischer.com
www.gfps.com/us

International
Georg Fischer
Piping Systems (Switzerland) Ltd
8201 Schaffhausen/Switzerland
Phone +41 (0) 52 631 30 03
Fax +41 (0) 52 631 28 93
info.export@georgfischer.com
www.gfps.com/int

The technical data are not binding. They neither constitute expressly warranted characteristics nor guaranteed properties nor a guaranteed durability. They are subject to modification. Our General Terms of Sale apply.

700.671.432
GFDO_9182_4c (03.16)
© Georg Fischer Piping Systems Ltd
CH-8201 Schaffhausen/Switzerland, 2016